LP5814 4-Channel I²C Interface RGBW LED Driver with Auto Animation Control

1 Features

- Operating voltage range
  - V_{CC} range: 2.5V to 5.5V
  - Logic pins compatible with 1.8V, 3.3V, and 5V
  - Output voltage up to 5.5V
- 4 constant current sinks with high precision
  - 0.1mA to 51mA per channel
  - Channel-to-channel error: ±3% (maximum)
  - Ultra-low headroom voltage: 135mV (max.) at 25.5mA; 275mV (max.) at 51mA
- Ultra-low power consumption
  - Shutdown: I_{SD} = 0.1µA (typical)
  - Standby: I_{STB} = 22µA (typical)
  - Active:
    - I_{NOR} = 0.15mA (typical), when disable output channel
    - I_{NOR} = 0.23mA (typical), LED current = 25.5mA
- Analog dimming (current gain control)
  - Global 1-bit Maximum Current (MC) 25.5mA/ 51mA
  - Individual 8-bits Dot Current (DC) setting
- PWM dimming up to audible-noise-free 23kHz
  - Individual 8-bits PWM dimming resolution
  - Linear or exponential dimming curves
- Autonomous animation engine control
- 1MHz (maximum) I²C interface
- ESD: 4kV HBM, 1.5kV CDM
- Package
  - 2.1mm × 1.6mm SOT583-8, 0.5mm pitch
  - 1.4mm × 0.7mm DSBGA-8, 0.35mm pitch
- –40°C to 125°C operating temperature range

2 Applications

LED animation and indication for:

- Personal Electronics
  - Virtual Reality (VR) Headset
  - Gaming Controller and Peripherals
  - Electronic and Robotic Toys
  - Smart Speaker
  - Wireless Speaker
  - Solid State Drive (SSD)
  - Electronic Smart Lock
  - Headsets/Headphones and Earbuds
  - GPS Personal Navigation Device
- WLAN/Wi-Fi Access Point
- Video Doorbell
- Video Conference System

3 Description

The LP5814 is a 4-channel RGBW LED driver with autonomous animation engine control. The device has ultra-low operation current with 0.1µA (typical) in shutdown mode, 0.1mA (typical) when enable device and 0.2mA (typical) when illuminate LEDs.

Both analog dimming and PWM dimming methods are adopted to achieve powerful dimming performance. The output current of each LED can be adjusted with 256 steps from 0.1mA to 25.5mA or 0.2mA to 51mA. The 8-bits PWM generator enables smooth and audible-noise-free dimming control for LED brightness.

The autonomous animation engine can significantly reduce the real-time loading of controller. Each LED can be configured through the related registers to realize vivid and fancy lighting effects.

Package Information

PART NUMBER	PACKAGE(1)	PACKAGE SIZE(2)
LP5814DRLR	DRL (SOT-5X3, 8)	2.1mm × 1.6mm
LP5814YCHR	YCH (DSBGA, 8)	1.4mm × 0.7mm

(1) For more information, see Section 11.
(2) The package size (length × width) is a nominal value and includes pins, where applicable

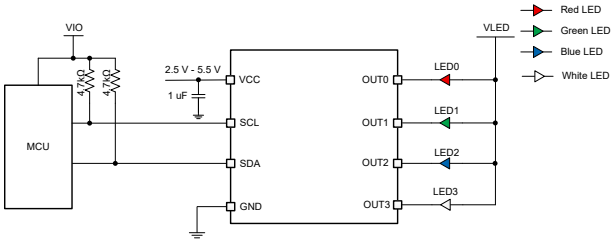

LP5814 Simplified Schematic

An IMPORTANT NOTICE at the end of this data sheet addresses availability, warranty, changes, use in safety-critical applications, intellectual property matters and other important disclaimers. PRODUCTION DATA.

Table of Contents

1 Features....1
2 Applications....1
3 Description....1
4 Device Comparison....3
5 Pin Configuration and Functions....4
6 Specifications....5
6.1 Absolute Maximum Ratings....5
6.2 ESD Ratings....5
6.3 Recommended Operating Conditions....5
6.4 Thermal Information....5
6.5 Electrical Characteristics....6
6.6 Timing Requirements....7
6.7 Timing Diagrams....8
6.8 Typical Characteristics....8
7 Detailed Description....12
7.1 Overview....12
7.2 Functional Block Diagram....12
7.3 Feature Description....13
7.4 Device Functional Modes....20
7.5 Programming....22
7.6 Register Maps....24
8 Application and Implementation....60
8.1 Application Information....60
8.2 Typical Application....60
8.3 Power Supply Recommendations....67
8.4 Layout....67
9 Device and Documentation Support....68
9.1 Documentation Support....68
9.2 Receiving Notification of Documentation Updates....68
9.3 Support Resources....68
9.4 Trademarks....68
9.5 Electrostatic Discharge Caution....68
9.6 Glossary....68
10 Revision History....68
11 Mechanical, Packaging, and Orderable Information....69

Copyright © 2026 Texas Instruments Incorporated

4 Device Comparison

PART NUMBER	PACKAGE(1)	MATERIAL	LED NUMBER	AUTO ANIMATIO	INSTANT BLINKING	I²C ADDRESS	SOFTWARE COMPATIBLE
LP5814	SOT583-8	LP5814DRLR	4	Yes	No	0x2C	Yes
	DSBGA-8	LP5814YCHR					
	DSBGA-8	LP5814IYCHR			Yes	0x2E	
LP5815	SOT583-8	LP5815DRLR	3			0x2D	
	DSBGA-8	LP5815YCHR					
LP5816	SOT583-8	LP5816DRLR	4	No	No	0x2C	
	DSBGA-8	LP5816YCHR					
LP5817	SOT583-8	LP5817DRLR	3			0x2D	
	DSBGA-8	LP5817YCHR					

(1) For the most up-to-date packaging information refer to Section 11.

5 Pin Configuration and Functions

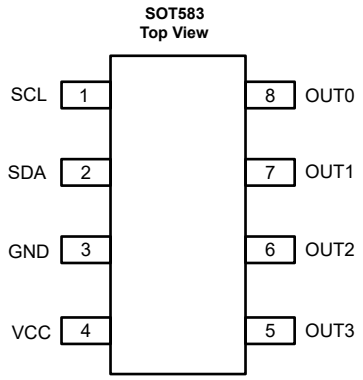

Figure 5-1. LP5814 DRL Package 8-Pin SOT583 Top View

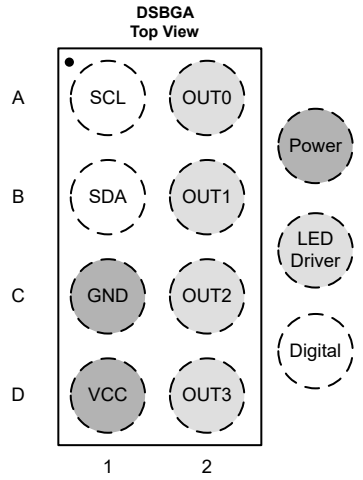

Figure 5-2. LP5814 YCH Package 8-Pin DSBGA Top View

Table 5-1. Pin Functions

PIN			TYPE[(1)]	DESCRIPTION
NAME	DRL	YCH		
SCL	1	A1	I	I^2C serial interface clock input.
SDA	2	B1	I/O	I^2C serial interface data input/output.
GND	3	C1	P	Ground.
VCC	4	D1	P	Power supply of the device. A 1µF capacitor is recommended to be connected between this pin with GND and be placed as close to the device as possible.
OUT3	5	D2	O	Constant current sink output 3.
OUT2	6	C2	O	Constant current sink output 2.
OUT1	7	B2	O	Constant current sink output 1.
OUT0	8	A2	O	Constant current sink output 0.

(1) P = Power Pin, I = Input Pin, I/O = Input/Output Pin, O = Output Pin.

Copyright © 2026 Texas Instruments Incorporated

6 Specifications

6.1 Absolute Maximum Ratings

over operating free-air temperature range (unless otherwise noted)[1]

		MIN	MAX	UNIT
Voltage range at terminals	VCC, SCL, SDA, OUT0, OUT1, OUT2, OUT3	–0.3	6	V
T_J	Junction temperature	–40	150	°C
T_{stg}	Storage temperature	–65	150	°C

(1) Operation outside the Absolute Maximum Ratings may cause permanent device damage. Absolute Maximum Ratings do not imply functional operation of the device at these or any other conditions beyond those listed under Recommended Operating Conditions. If used outside the Recommended Operating Conditions but within the Absolute Maximum Ratings, the device may not be fully functional, and this may affect device reliability, functionality, performance, and shorten the device lifetime.

6.2 ESD Ratings

			VALUE	UNIT
$V_{(ESD)}$	Electrostatic discharge	Human body model (HBM), per ANSI/ESDA/JEDEC JS-001, all pins[1]	±4000	V
		Charged device model (CDM), per ANSI/ESDA/JEDEC JS-002, all pins[2]	±1500	

(1) JEDEC document JEP155 states that 500V HBM allows safe manufacturing with a standard ESD control process.
(2) JEDEC document JEP157 states that 250V CDM allows safe manufacturing with a standard ESD control process.

6.3 Recommended Operating Conditions

over operating free-air temperature range (unless otherwise noted)

		MIN	NOM	MAX	UNIT
V_{CC}	Input voltage range	2.5		5.5	V
C_{IN}	Effective input capacitance range	1	4.7		µF
OUT0, OUT1, OUT2, OUT3	Voltage on OUT0, OUT1, OUT2, OUT3 pins	0		5.5	V
SCL, SDA	Voltage on SCL, SDA pins	0		5.5	V
T_A	Ambient temperature	–40		85	°C
T_J	Operating junction temperature	–40		125	°C

6.4 Thermal Information

THERMAL METRIC[1]		LP5814		UNIT
		DRL (SOT583)	YCH (DSBGA)	
		8 PINS	8 PINS	
$R_{\theta JA}$	Junction-to-ambient thermal resistance	118.9	125.2	°C/W
$R_{\theta JC(top)}$	Junction-to-case (top) thermal resistance	47.1	0.6	°C/W
$R_{\theta JB}$	Junction-to-board thermal resistance	27.5	38.9	°C/W
Ψ_{JT}	Junction-to-top characterization parameter	1.4	0.6	°C/W
Ψ_{JB}	Junction-to-board characterization parameter	27.2	38.9	°C/W
$R_{\theta JC(bot)}$	Junction-to-case (bottom) thermal resistance	n/a	n/a	°C/W

(1) For more information about traditional and new thermal metrics, see the Semiconductor and IC Package Thermal Metrics application note.

6.5 Electrical Characteristics

Unless specified otherwise, typical characteristics apply over the full ambient temperature range (–40°C < T_A < +85°C), V_{CC} = 3.6V, C_{IN} = 1µF.

PARAMETER		TEST CONDITIONS	MIN	TYP	MAX	UNIT
Power Supply						
V_{CC}	Input voltage range		2.5		5.5	V
V_{CC_UVLO}	Under-voltage lockout threshold	V_{CC} rising	2.2	2.3	2.4	V
		V_{CC} falling	2	2.1	2.2	V
I_{SD}	Shutdown current into VCC pin	V_{CC} = 3.6V		0.1	0.3	µA
I_{STB}	Standby current into VCC pin	V_{CC} = 3.6V, CHIP_EN = 0 (bit)		22	28	µA
I_{NOR}	Normal operation current into VCC pin	V_{CC} = 3.6V, CHIP_EN = 1 (bit), OUT0_EN = OUT1_EN = OUT2_EN = OUT3_EN = 0 (bit)		0.15	0.19	mA
I_{NOR}	Normal operation current into VCC pin	V_{CC} = 3.6V, CHIP_EN = 1 (bit), OUT0_EN = OUT1_EN = OUT2_EN = OUT3_EN = 1 (bit), I_{OUT0} = I_{OUT1} = I_{OUT2} = I_{OUT3} = 25.5mA (MAX_CURRENT = 0 (bit), OUTx_DC = FFh, OUTx_MANUAL_PWM = FFh)		0.23	0.3	mA
LED Driver Output						
I_{CS}	Constant current sink output range	V_{CC} = 3.6V, VLED = 5V, MAX_CURRENT = 0 (bit), OUTx_MANUAL_PWM = FFh (100% ON)	0.1		25.5	mA
		V_{CC} = 3.6V, VLED = 5V, MAX_CURRENT = 1 (bit), OUTx_MANUAL_PWM = FFh (100% ON)	0.2		51	mA
I_{CS_LKG}	Constant current sink leakage current	V_{CC} = 3.6V, OUTx = 1V, OUTx_MANUAL_PWM = 0 (0%)		0.1	1	µA
I_{ERR_D2D}	Device to device current error, I_{ERR_D2D} = (I_{AVE}-I_{SET})/I_{SET}×100%	All LEDs turn ON. Current set to 25.5mA (MAX_CURRENT = 0 (bit), OUTx_DC = FFh, OUTx_MANUAL_PWM = FFh)	–11		11	%
		All LEDs turn ON. Current set to 51mA (MAX_CURRENT = 1 (bit), OUTx_DC = FFh, OUTx_MANUAL_PWM = FFh)	–11		11	%
I_{ERR_C2C}	Channel to Channel current error I_{ERR_C2C} = (I_{OUTX}-I_{AVE})/I_{AVE}×100%	All LEDs turn ON. Current set to 25.5mA (MAX_CURRENT = 0 (bit), OUTx_DC = FFh, OUTx_MANUAL_PWM = FFh)	–3		3	%
		All LEDs turn ON. Current set to 51mA (MAX_CURRENT = 1 (bit), OUTx_DC = FFh, OUTx_MANUAL_PWM = FFh)	–2		2	%
V_{HR}	LED driver output headroom voltage	All LEDs turn ON. Current set to 25.5mA (MAX_CURRENT = 0 (bit), OUTx_DC = FFh, OUTx_MANUAL_PWM = FFh), V_{CC} = 3.6V			0.135	V
		All LEDs turn ON. Current set to 51mA (MAX_CURRENT = 1 (bit), OUTx_DC = FFh, OUTx_MANUAL_PWM = FFh), V_{CC} = 3.6V			0.275	V
		All LEDs turn ON. Current set to 25.5mA (MAX_CURRENT = 0 (bit), OUTx_DC = FFh, OUTx_MANUAL_PWM = FFh), V_{CC} = 2.5V			0.15	V
		All LEDs turn ON. Current set to 51mA (MAX_CURRENT = 1 (bit), OUTx_DC = FFh, OUTx_MANUAL_PWM = FFh), , V_{CC} = 2.5V			0.3	V
f_{LED_PWM}	PWM dimming frequency			23		kHz

Copyright © 2026 Texas Instruments Incorporated

Unless specified otherwise, typical characteristics apply over the full ambient temperature range (–40°C < T_A < +85°C), V_{CC} = 3.6V, C_{IN} = 1µF.

PARAMETER		TEST CONDITIONS	MIN	TYP	MAX	UNIT
f_{OSC}	Internal oscillator frequency			6		MHz
Logic Interface						
V_{IH_LOGIC}	High level input voltage of SDA, SCL		1.4			V
V_{IL_LOGIC}	Low level input voltage of SDA, SCL				0.4	V
V_{OL_LOGIC}	Low level output voltage of SDA				0.4	V
Protection						
T_{SD}	Thermal shutdown threshold for LED driver part	T_J rising		150		°C
T_{SD_HYS}	Thermal shutdown hysteresis	T_J falling below T_{SD}		15		°C

6.6 Timing Requirements

Unless specified otherwise, typical characteristics apply over the full ambient temperature range (–40°C < TA < +85°C), V_{CC} = 3.6V, C_{IN} = 1µF.

I²C Timing Requirements		MIN	NOM	MAX	UNIT
Standard-mode					
f_{SCL}	SCL clock frequency	0		100	kHz
1	Hold time (repeated) START condition. After this period, the first clock pulse is generated.	4			µs
2	LOW period of the SCL clock	4.7			µs
3	HIGH period of the SCL clock	4			µs
4	Set-up time for a repeated START condition	4.7			µs
5	Data hold time	0			µs
6	Data set-up time	250			ns
7	Rise time of both SDA and SCL signals			1000	ns
8	Fall time of both SDA and SCL signals			300	ns
9	Set-up time for STOP condition	4			µs
10	Bus free time between a STOP and START condition	4.7			µs
C_b	Capacitive load for each bus line			400	pF
Fast-mode					
f_{SCL}	SCL clock frequency	0		400	kHz
1	Hold time (repeated) START condition. After this period, the first clock pulse is generated.	0.6			µs
2	LOW period of the SCL clock	1.3			µs
3	HIGH period of the SCL clock	0.6			µs
4	Set-up time for a repeated START condition	0.6			µs
5	Data hold time	0			µs
6	Data set-up time	100			ns
7	Rise time of both SDA and SCL signals			300	ns
8	Fall time of both SDA and SCL signals			300	ns
9	Set-up time for STOP condition	0.6			µs
10	Bus free time between a STOP and START condition	1.3			µs
C_b	Capacitive load for each bus line			400	pF
Fast-mode Plus					
f_{SCL}	SCL clock frequency	0		1000	kHz

Copyright © 2026 Texas Instruments Incorporated

Unless specified otherwise, typical characteristics apply over the full ambient temperature range (–40°C < TA < +85°C), V_{CC} = 3.6V, C_{IN} = 1µF.

	I²C Timing Requirements	MIN	NOM	MAX	UNIT
1	Hold time (repeated) START condition. After this period, the first clock pulse is generated.	0.26			µs
2	LOW period of the SCL clock	0.5			µs
3	HIGH period of the SCL clock	0.26			µs
4	Set-up time for a repeated START condition	0.26			µs
5	Data hold time	0			µs
6	Data set-up time	50			ns
7	Rise time of both SDA and SCL signals			120	ns
8	Fall time of both SDA and SCL signals			120	ns
9	Set-up time for STOP condition	0.26			µs
10	Bus free time between a STOP and START condition	0.5			µs
C_b	Capacitive load for each bus line			550	pF

6.7 Timing Diagrams

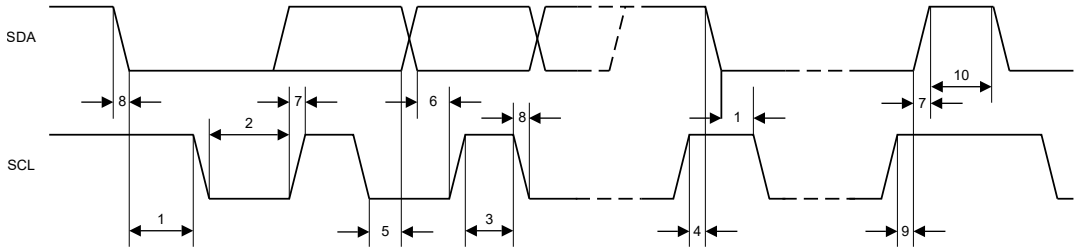

Figure 6-1. I²C Timing Parameters

6.8 Typical Characteristics

Unless specified otherwise, typical characteristics apply over the full ambient temperature range (–40°C < T_A < +85°C), V_{CC} = 3.6V, C_{IN} = 1µF

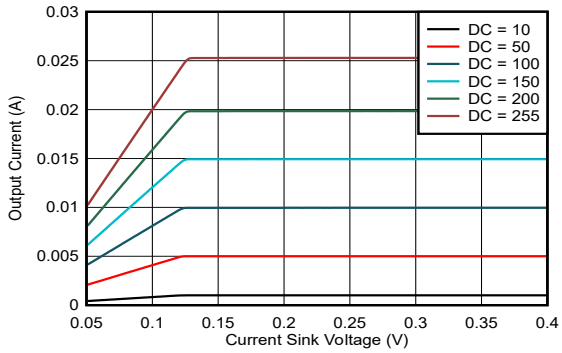

Figure 6-2. Current Sinks Voltage vs Current (MC = 0, VCC = 2.5V)

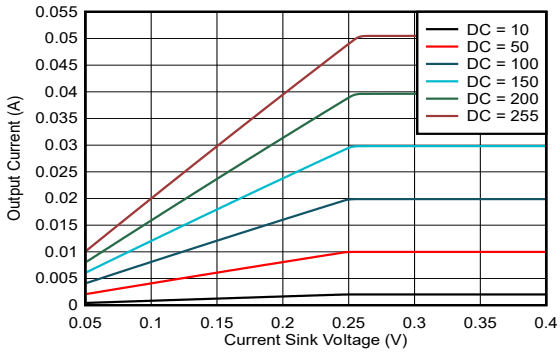

Figure 6-3. Current Sinks Voltage vs Current (MC = 1, VCC = 2.5V)

Copyright © 2026 Texas Instruments Incorporated

6.8 Typical Characteristics (continued)

Unless specified otherwise, typical characteristics apply over the full ambient temperature range (–40°C < T_A < +85°C), V_{CC} = 3.6V, C_{IN} = 1µF

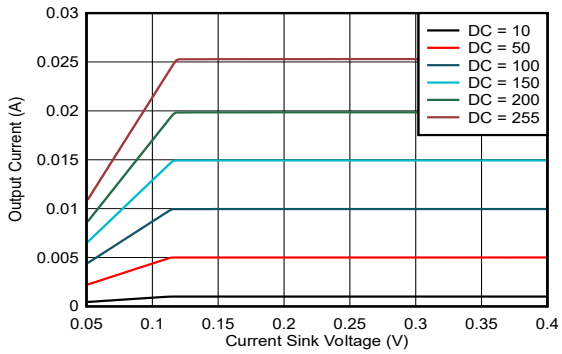

Figure 6-4. Current Sinks Voltage vs Current (MC = 0, VCC = 3.6V)

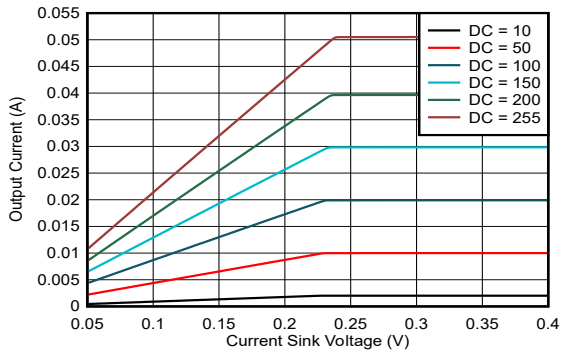

Figure 6-5. Current Sinks Voltage vs Current (MC = 1, VCC = 3.6V)

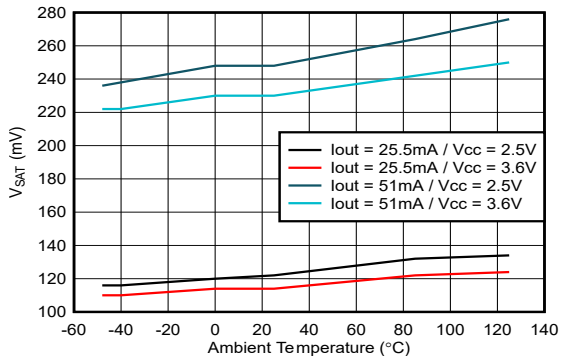

Figure 6-6. V_{SAT} vs Temperature

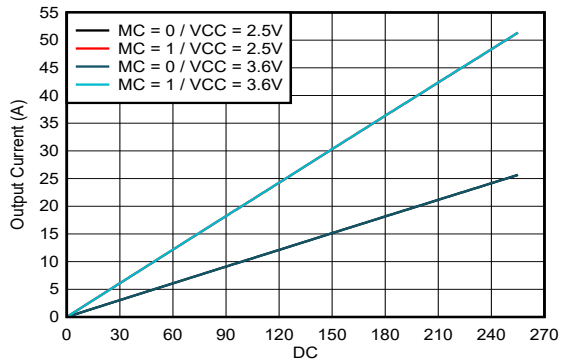

Figure 6-7. DC vs Current

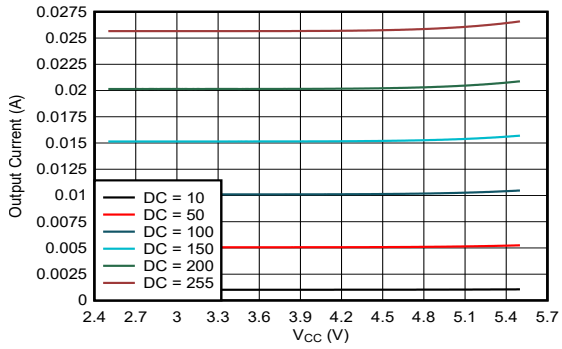

Figure 6-8. V_{CC} vs Current (MC = 0)

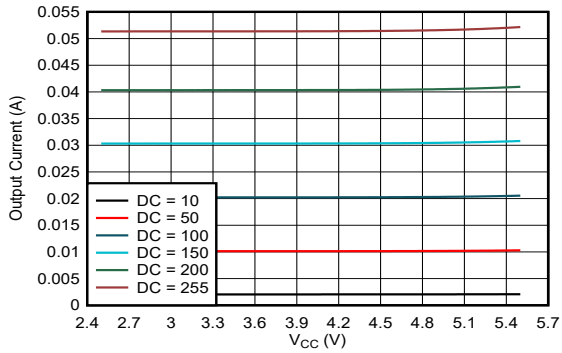

Figure 6-9. V_{CC} vs Current (MC = 1)

6.8 Typical Characteristics (continued)

Unless specified otherwise, typical characteristics apply over the full ambient temperature range (–40°C < T_A < +85°C), V_{CC} = 3.6V, C_{IN} = 1µF

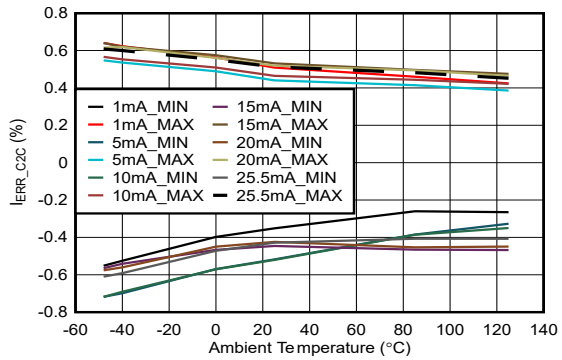

Figure 6-10. Channel-to-Channel Current Accuracy vs Temperature (MC = 0, VCC = 2.5V)

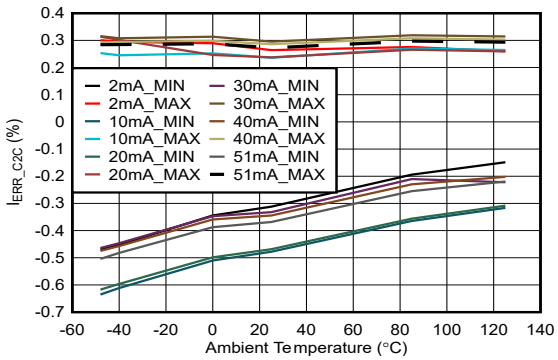

Figure 6-11. Channel-to-Channel Current Accuracy vs Temperature (MC = 1, VCC = 2.5V)

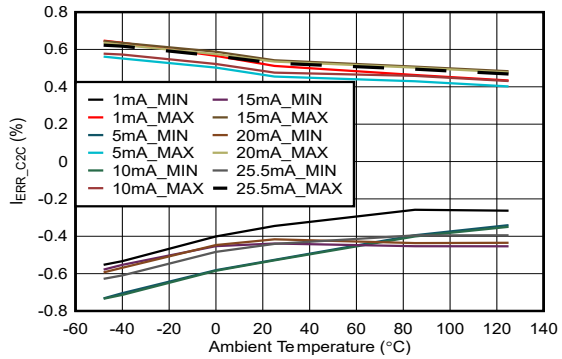

Figure 6-12. Channel-to-Channel Current Accuracy vs Temperature (MC = 0, VCC = 3.6V)

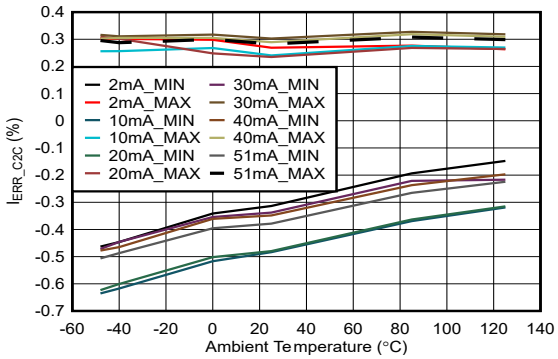

Figure 6-13. Channel-to-Channel Current Accuracy vs Temperature (MC = 1, VCC = 3.6V)

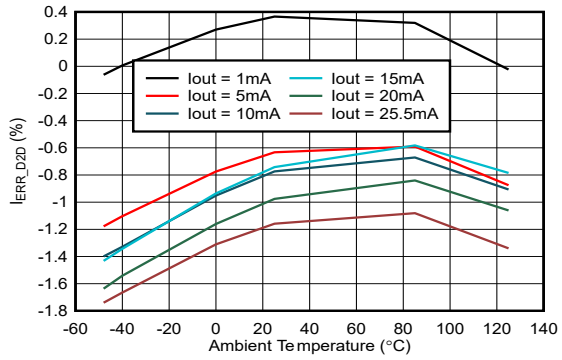

Figure 6-14. Device-to-Device Current Accuracy vs Temperature (MC = 0, VCC = 2.5V)

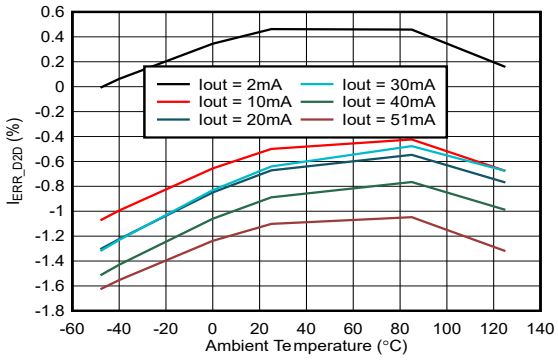

Figure 6-15. Device-to-Device Current Accuracy vs Temperature (MC = 1, VCC = 2.5V)

Copyright © 2026 Texas Instruments Incorporated

6.8 Typical Characteristics (continued)

Unless specified otherwise, typical characteristics apply over the full ambient temperature range (–40°C < T_A < +85°C), V_{CC} = 3.6V, C_{IN} = 1µF

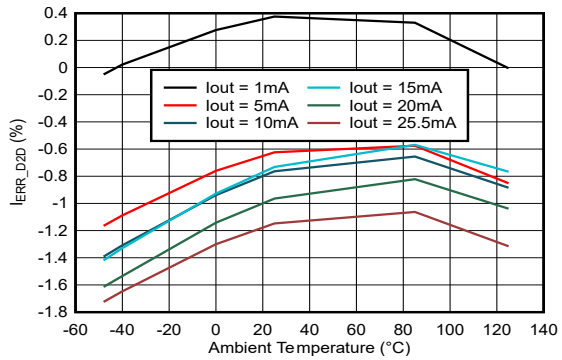

Figure 6-16. Device-to-Device Current Accuracy vs Temperature (MC = 0, VCC = 3.6V)

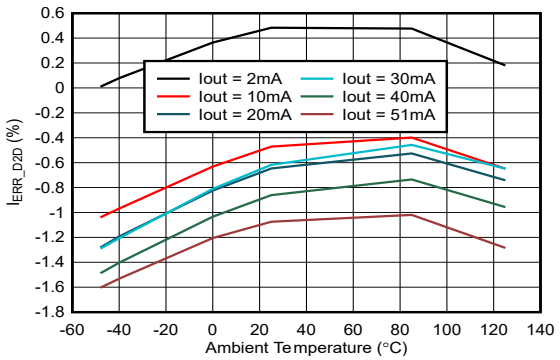

Figure 6-17. Device-to-Device Current Accuracy vs Temperature (MC = 1, VCC = 3.6V)

7 Detailed Description

7.1 Overview

The LP5814 is a 4 RGBW LED driver and autonomous animation control. The maximum output current of each channel is up to 51mA and can be adjusted by 256 steps from 0 to the full current. Besides the analog dimming, every channel supports 8-bit PWM dimming in both manual mode and autonomous animation mode.

The LP5814 features ultra-low shutdown current that is about 0.1μA. Two approaches are provided to control the LP5814 enter shutdown mode, sending shutdown command or constantly pulling down SCL, which improves the flexibility in system design for different application requirements.

The LP5814 integrates advanced autonomous animation control architecture. Four basic configurable independent pattern units can be selected and organized for each channel arbitrarily to realize both simple and complicated pattern effects.

7.2 Functional Block Diagram

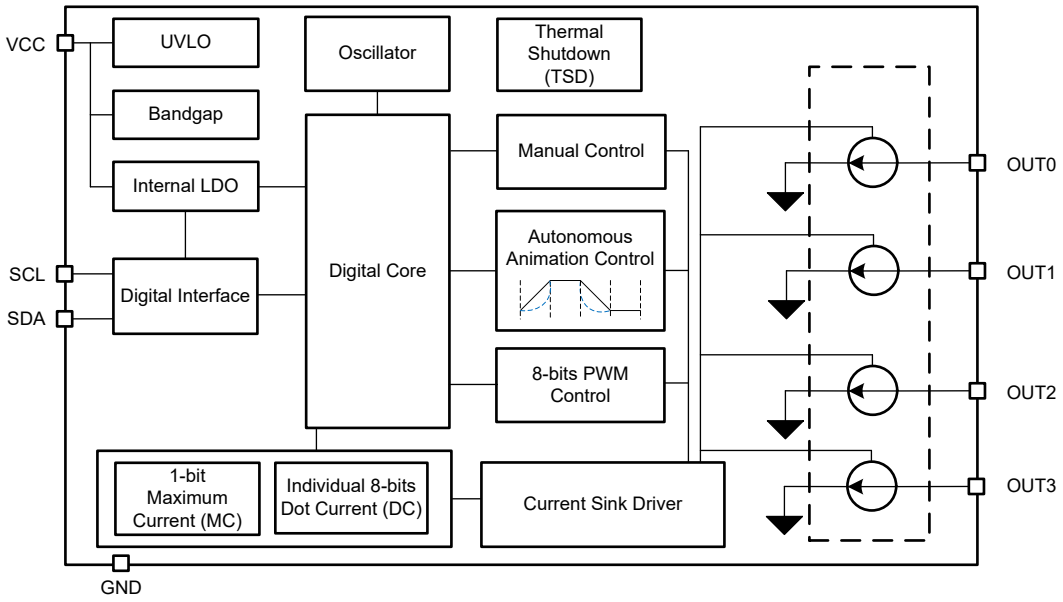

Figure 7-1. LP5814 Function Block

Copyright © 2026 Texas Instruments Incorporated

7.3 Feature Description

7.3.1 Analog Dimming

There are two methods to control the current gain of each output channel.

- Global 1-bit Maximum Current (MC) control for all channels without external resistor
- Individual 8-bit Dot Current (DC) control for each channel

The maximum output current I_{OUT_max} of each channel can be programmed by the 1 bit MAX_CURRENT. When the device is powered on, the default value of MC is 0h, which is 25.5mA.

Table 7-1. Maximum Current (MC) Bit Setting

1-bit Maximum Current (MC)		I_{OUT_MAX} (mA)
Binary	Decimal	
0 (default)	0 (default)	25.5 (default)
1	1	51

The LP5814 can individually adjust the analog output current of each channel by using Dot Current (DC) function. The brightness deviation among the LED bins can be minimized to achieve uniform display performance through the DC setting. The DC is programmed in an 8-bit depth, so the analog current can be adjusted with 256 steps from 0 to 100% of $I_{OUT_MAX.}$. The default value of all DC is 0h, which is not current output.

Table 7-2. Dot Current (DC) Bits Setting

8-bits Dot Current (DC) Register		Ratio of I_{OUT_MAX}
Binary	Decimal	
0000 0000 (default)	0 (default)	0% (default)
0000 0001	1	0.39%
0000 0010	2	0.78%
---	---	---
1000 0000	128	50.2%
---	---	---
1111 1101	253	99.2%
1111 1110	254	99.6%
1111 1111	255	100%

By configuring the MC and DC, the analog output current of each channel can be calculated as Equation 1:

$$I_{OUT}\left(mA\right) = I_{OUT_MAX} \times \frac{DC}{255} \tag{1}$$

Equation 2 calculates the average output current of each channel.

$$I_{AVE}\left(mA\right) = I_{OUT_MAX} \times \frac{DC}{255} \times D_{PWM} \tag{2}$$

- D_{PWM} is the PWM duty.

7.3.2 PWM Dimming

The LP5814 supports 8-bit PWM dimming with 23kHz frequency in both manual mode and autonomous animation mode. The device integrates an internal 6MHz oscillator to generate the PWM clock.

The LP5814 allows users to configure the dimming scale as exponential curve or linear curve for each channel separately through the OUT0_EXP_EN, OUT1_EXP_EN, OUT2_EXP_EN and OUT3_EXP_EN in DEV_CONFIG3 register. A human-eye-friendly visual performance can be achieved by using the internal exponential scale. The linear scale has great linearity between PWM duty cycle and PWM setting value, which provides flexible approach for external controlled gamma correction algorithm. The 8-bit linear and exponential curves are shown as Figure 7-2.

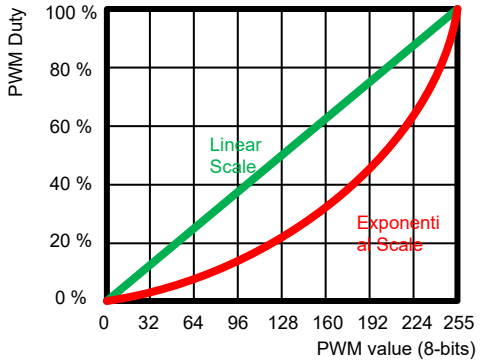

Figure 7-2. Linear and Exponential PWM Dimming Curves

7.3.3 Sloper

In manual control mode, output fade in or out is supported when LED0_FADE_EN, LED1_FADE_EN, LED2_FADE_EN and LED3_FADE_EN bit in DEV_CONFIG2 register is set as 1. Sloper is the basic element to achieve autonomous fade in and fade out animations. The output can achieve 256 steps fade in or fade out effects from 'PWM_Start' to 'PWM_End' within a specified time period T as shown in Figure 7-3. Exponential dimming curve can also be supported in the sloper.

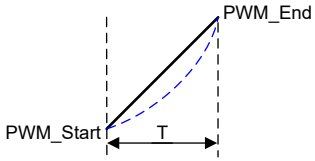

Figure 7-3. Sloper Curve Demonstration

The programable time T is selectable from 0 to around 8s with 16 levels shown in Table 7-3.

Table 7-3. Programable Time Options

Register Value	0h	1h	2h	3h	4h	5h	6h	7h	8h	9h	Ah	Bh	Ch	Dh	Eh	Fh
Time (Typ.)	0s	0.05s	0.1s	0.15s	0.2s	0.25s	0.3s	0.35s	0.4s	0.45s	0.5s	1s	2s	4s	6s	8s

Copyright © 2026 Texas Instruments Incorporated

7.3.4 Autonomous Animation Control

The LP5814 supports autonomous animation control for each channel. With the animation engine the device can realize vivid lighting effects while releasing the loading of external controller.

As showed in Figure 7-4, the LP5814 has 4 independent configurable animation engine units, ENGINE0, ENGINE1, ENGINE2 and ENGINE3. Any one of the 4 engines can be selected by each output channel. There are 4 engine orders to construct one engine unit. For each engine order, one pattern unit can be selected to execute when the engine order is enabled. At the bottom layer, there are 4 independent configurable pattern units.

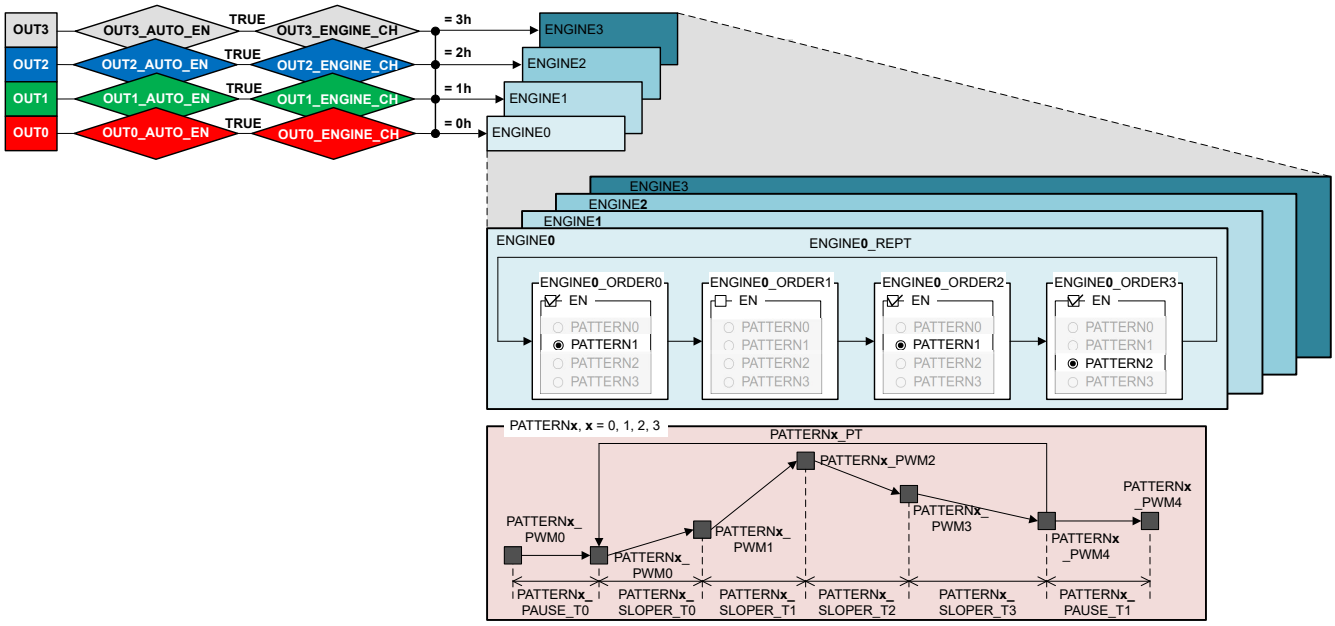

Figure 7-4. Animation Pattern Overview

7.3.4.1 Animation Engine Unit

The LP5814 has 4 independent animation engine units ENGINE0, ENGINE1, ENGIN2 and ENGINE3. For each output, any one of the 4 engines can be selected by setting the register OUT*x*_ENGINE_CH bits in DEV_CONFIG4 register (*x* = 0, 1, 2 , 3).

- OUT*x*_ENGINE_CH = 0, ENGINE0 is selected
- OUT*x*_ENGINE_CH = 1, ENGINE1 is selected
- OUT*x*_ENGINE_CH = 2, ENGINE2 is selected
- OUT*x*_ENGINE_CH = 3, ENGINE3 is selected

There are 4 engine orders, ENGINE*x*_ORDER0, ENGINE*x*_ORDER1, ENGINE*x*_ORDER2 and ENGINE*x*_ORDER3, to construct one engine unit ENGINE*x* (*x* = 0, 1, 2, 3). The 4 engine orders in one engine unit is executed sequentially. But any one of the 4 engine orders can be skipped by disabling the engine order through setting the corresponding E*x*O*y*_EN bit as 0 (*x*, *y* = 0, 1, 2, 3) in ENGINE_CONFIG4 and ENGINE_CONFIG5 registers.

If 4 engine orders in one engine unit are all disabled, the engine unit is not started after sending the Start_command. The corresponding internal engine busy flag is not set as shown in Figure 7-7.

The engine unit ENGINE*x* can be defined to execute repeatedly as the times specified in ENGINE*x*_REPT in ENGINE_CONFIG6 register.

- ENGINE*x*_REPT = 0, ENGINEx does not repeat
- ENGINE*x*_REPT = 1, ENGINEx repeats 1 time
- ENGINE*x*_REPT = 2, ENGINEx repeats 2 times

- ENGINE*x*_REPT = 3, ENGINEx repeats infinitely

Engine order is enabled by setting the corresponding E*x*O*y*_EN bit as 1. Any one of 4 basic patterns can be selected through the ENGINE*x*_ORDER*y* from ENGINE_CONFIG0 to ENGINE_CONFIG3 registers (*x*, *y* = 0, 1, 2, 3).

- ENGINEx_ORDERy = 0, PATTERN0 is selected
- ENGINEx_ORDERy = 1, PATTERN1 is selected
- ENGINEx_ORDERy = 2, PATTERN2 is selected
- ENGINEx_ORDERy = 3, PATTERN3 is selected

7.3.4.2 Animation Pattern Unit

The LP5814 has 4 independent configurable pattern units, PATTERN0, PATTERN1, PATTERN2 and PATTERN3. Every pattern unit has 5 PWM values, 6 time values and 1 play times value.

For PATTERN*x* (*x* = 0, 1, 2, 3),

- The 5 PWM values are stored in PATTERN*x*_PWM0, PATTERN*x*_PWM1, PATTERN*x*_PWM2, PATTERN*x*_PWM3 and PATTERN*x*_PWM4. The 8 bits PWM value can be programmed from 0 to 255. Exponential dimming curve can also be supported in the sloper time.
- The 6 time values are divided into 2 types, pause time and sloper time. There are 2 pause time, PATTERN*x*_PAUSE_T0 and PATTERN*x*_PAUSE_T1. 4 sloper time, PATTERN*x*_SLOPER_T0, PATTERN*x*_SLOPER_T1, PATTERN*x*_SLOPER_T2 and PATTERN*x*_SLOPER_T3. Every time value can be configured from 0 to 8s with 16 options.
- The pattern play times value is stored in PATTERN*x*_PT and can be configured from 0 to infinite times with 16 options. When the PATTERN*x*_PT = 0, the 2 pause time, output PWM0 for PAUSE_T0 and output PWM4 for PAUSE_T1, are still executed to construct the pattern unit.

Figure 7-5 shows a typical breathing effect example.

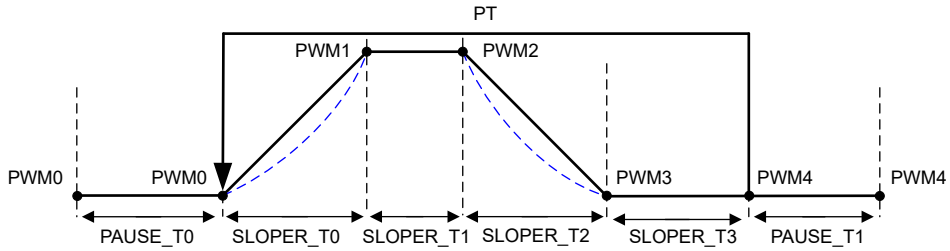

Figure 7-5. Animation Pattern Unit - Example 1

Figure 7-6 shows an advanced breathing effect example. There are 2 different fading speeds are set in the PWM rising and falling phases, to achieve a complex animation.

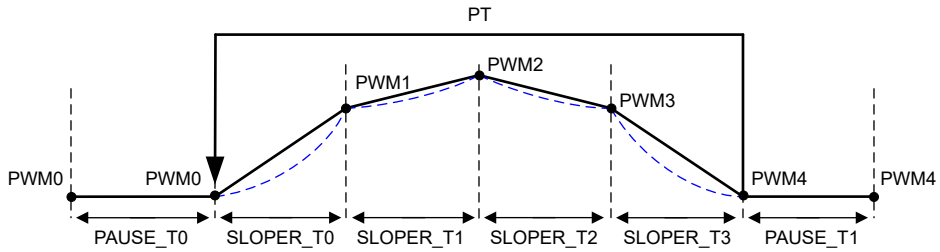

Figure 7-6. Animation Pattern Unit - Example 2

7.3.4.3 Animation Control

The LP5814 has individual engine busy flag for each output channel, OUT0_ENGINE_BUSY, OUT1_ENGINE_BUSY, OUT2_ENGINE_BUSY and OUT3_ENGINE_BUSY, to indicate whether the engine

Copyright © 2026 Texas Instruments Incorporated

selected by the output channel is under running or not. Besides the individual output busy flag there is a global engine busy flag, ENGINE_BUSY, to indicate if there is engine under running or not.

When the ENGINE_BUSY is set as 1, the engine configure registers and pattern configure registers shown in Table 7-4 are locked for modification protection. These engine busy lock registers can only be modified when **ENGINE_BUSY = 0**.

Table 7-4. Engine Busy Lock Registers

Description	Register Address	Register Acronym
Engine configure registers	0x06 to 0x0C	ENGINE_CONFIG0 to ENGINE_CONFIG6
Pattern configure registers	0x1C to 0x3F	• PATTERN*x*_PAUSE_TIME • PATTERN*x*_REPEAT_TIME • PATTERN*x*_PWM0 • PATTERN*x*_PWM1 • PATTERN*x*_PWM2 • PATTERN*x*_PWM3 • PATTERN*x*_PWM4 • PATTERN*x*_SLOPER_TIME1 • PATTERN*x*_SLOPER_TIME2 *x* = 0, 1, 2, 3

The LP5814 has 4 internal engine busy flags, ENGINE0_BUSY, ENGINE1_BUSY, ENGINE2_BUSY and ENGINE3_BUSY, as shown in Figure 7-7. The ENGINEy_BUSY is set as 1 after Start_command is received with all the below conditions.

- The engine has been selected by at least one channel, for example OUTx, and there is at least one engine order enabled in this engine
- The autonomous enable bit is set as 1 of the OUTx

The internal ENGINEy_BUSY flag keeps as 1 until the engine has completed or there is Stop_command received.

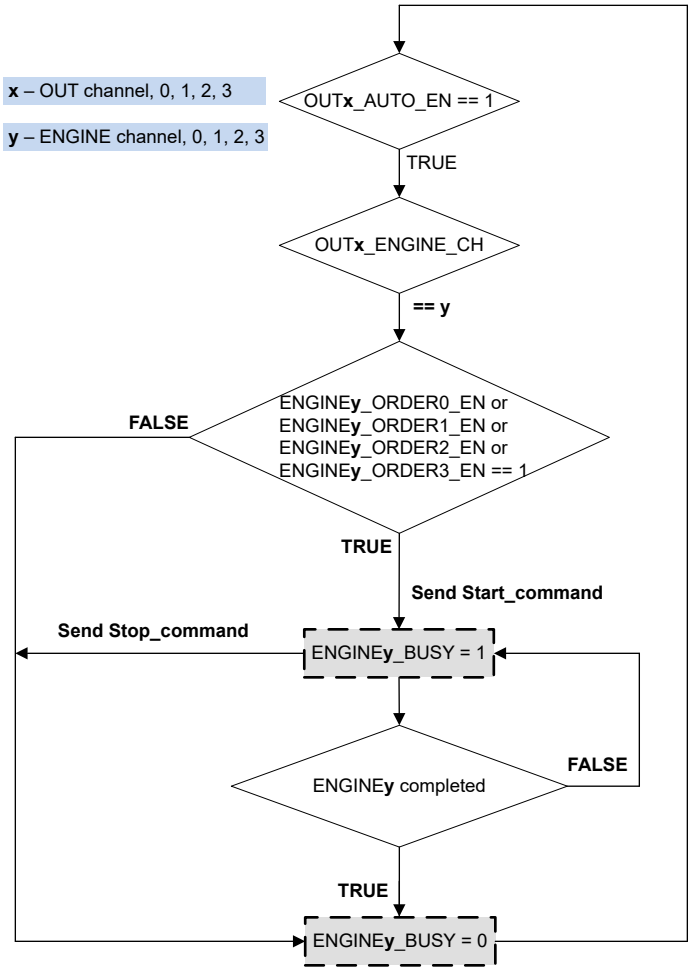

Figure 7-7. Internal Engine Busy Status

Any one of the internal engine busy flag, ENGINEx_BUSY, set to 1 leads to the global engine busy flag, ENGINE_BUSY, being 1, as shown in Figure 7-8.

The individual engine busy flag, OUTx_ENGINE_BUSY, is dependent on the internal engine busy flag selected by the corresponding engine channel register value.

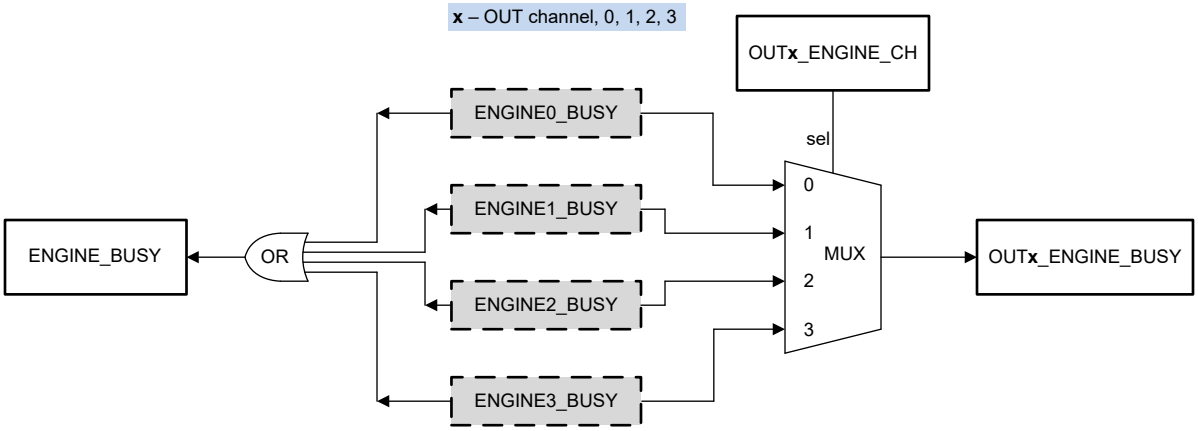

Figure 7-8. Individual and Global Engine Busy Flag

Copyright © 2026 Texas Instruments Incorporated

7.3.5 Protections

7.3.5.1 UVLO

The LP5814 has an internal comparator that monitors the voltage at VCC. When V_{CC} is below V_{CC_UVLO}, the device resets and keeps in Power On Reset (POR) state. When V_{CC} ramps above V_{CC_UVLO}, the device enters INITIALIZATION mode and the POR flag is set. The POR flag needs manual clear by setting POR_CLR bit when CHIP_EN = 1.

7.3.5.2 Thermal Shutdown

The LP5814 implements a thermal shutdown mechanism to protect the device from damage due to overheating. When the junction temperature of the device rises to 155ºC (typical), the device turns off all output channels. The TSD flag is set to indicate thermal shutdown is triggered. The LP5814 releases thermal shutdown when the junction temperature reduces to 140ºC (typical). The TSD flag needs manual clear by setting TSD_CLR bit when CHIP_EN = 1.

Copyright © 2026 Texas Instruments Incorporated

7.4 Device Functional Modes

The Figure 7-9 shows the function modes of the LED driver.

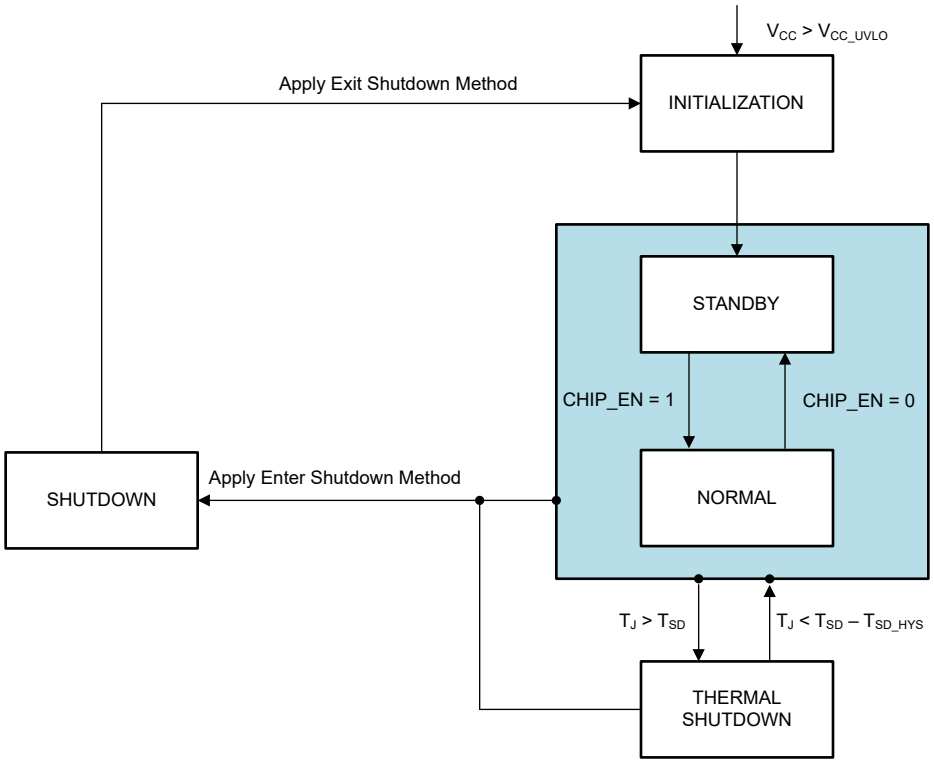

Figure 7-9. Functional Modes

7.4.1 Initialization Mode

The LP5814 enters INITIALIZATION mode when VCC voltage ramps above the V_{CC_UVLO} or exits from SHUTDOWN mode. The LP5814 reset all registers to default value in INITIALIZATION mode. The POR flag is set to 1 after exiting from INITIALIZATION mode to indicate the reset history.

7.4.2 Standby and Normal Mode

The LP5814 enters STANDBY mode when CHIP_EN = 0 or NORMAL mode when CHIP_EN = 1 after exiting from INITIALIZATION mode or THERMAL SHUTDOWN mode.

While staying in STANDBY or NORMAL mode,

- when Enter Shutdown Method is applied, the LP5814 enters SHUTDOWN mode. The Enter Shutdown Method is described in Shutdown Mode.
- when the junction temperature of the LP5814 rises above the thermal shutdown threshold T_{SD}, the LP5814 turns off all output channels and enters THERMAL SHUTDOWN mode.

7.4.3 Shutdown Mode

The LP5814 supports shutdown mode to minimize the power consumption from VCC. The quiescent current from VCC decreases to 0.1µA (typical) in SHUTDOWN mode. The LP5814 provides two pairs of methods to control the device enter and exit SHUTDOWN mode.

- Figure 7-10 shows the method 1
  - **Enter shutdown**, send Shutdown_command by writing 0x33 to register 0xD though I^2C communication.
  - **Exit shutdown**, toggle SDA 8 times to generate 8 falling edges while keeping SCL as high. The supported maximum toggle frequency for SDA is 100kHz.

Copyright © 2026 Texas Instruments Incorporated

- Figure 7-11 shows the method 2
  - **Enter shutdown**, pull down SCL for 100ms while keeping SDA as high.
  - **Exit shutdown**, pull up SCL to generate one rising edge regardless of SDA state.

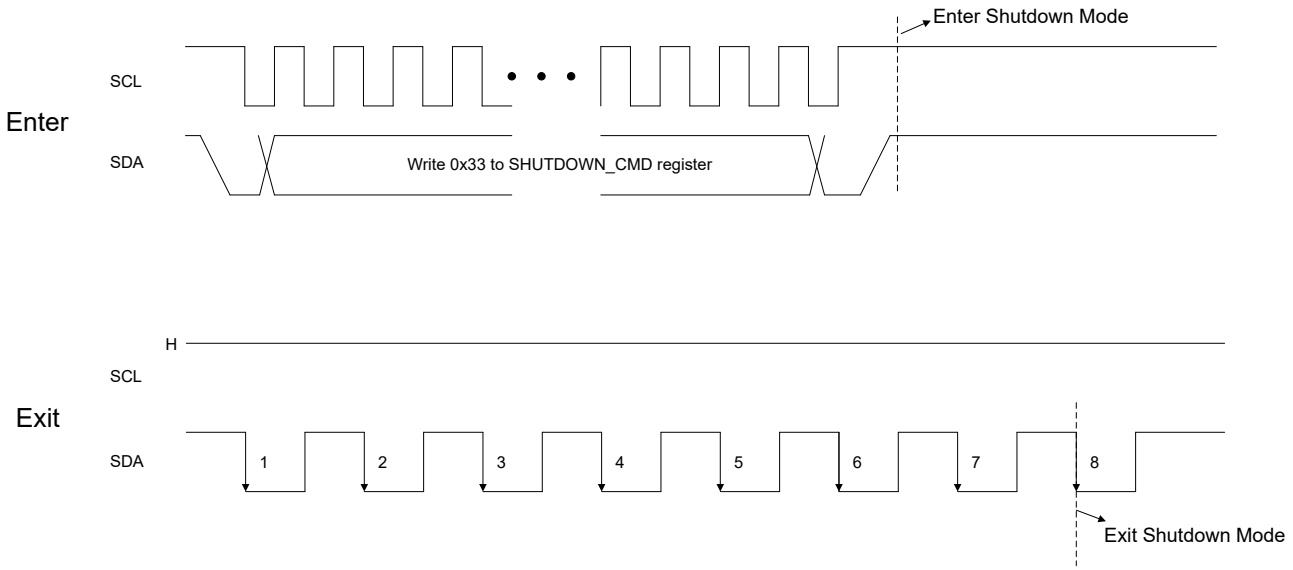

Figure 7-10. Enter and Exit Shutdown Mode Method Pair 1

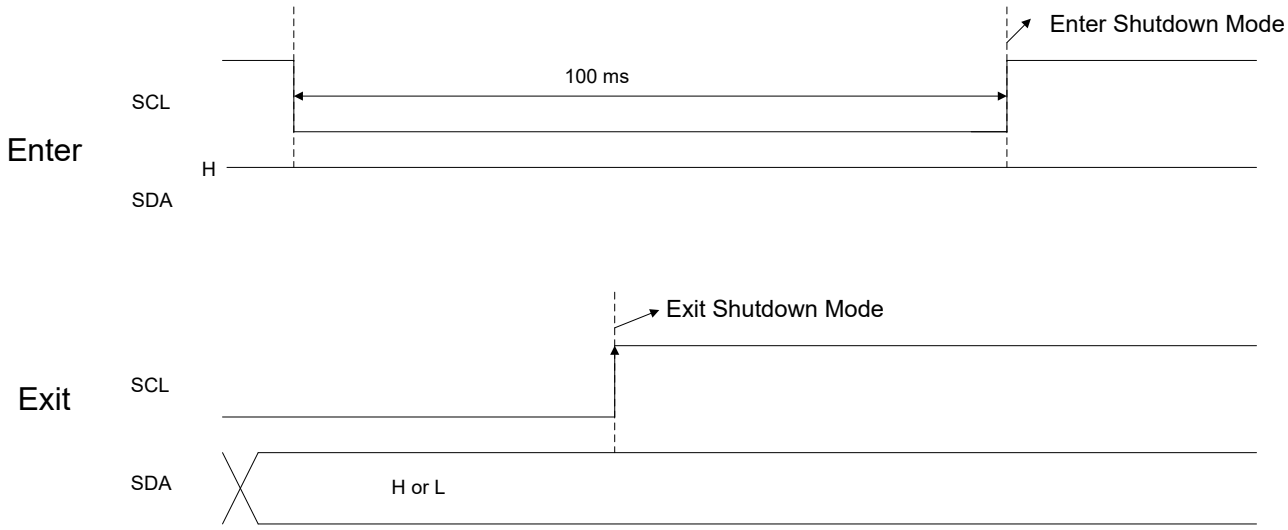

Figure 7-11. Enter and Exit Shutdown Mode Method Pair 2

7.4.4 Thermal Shutdown Mode

All output channels are turned off while the LP5814 staying in THERMAL SHUTDOWN mode. The I2C interface is still active and the LP5814 enters SHUTDOWN mode when Enter Shutdown Method is applied.

When the junction temperature of LP5814 falles blow the thermal shutdown threshold, the LP5814 enters STANDBY mode when CHIP_EN = 0 or NORMAL mode when CHIP_EN = 1 after exiting from THERMAL SHUTDOWN mode. The TSD flag needs manual clear through setting TSD_CLR bit when CHIP_EN = 1.

7.5 Programming

The LP5814 is compatible with I^{2}C standard specification. The device supports standard mode (100kHz maximum), fast mode (400kHz maximum) and fast plus mode (1MHz maximum). The device chip address is 0x2C.

7.5.1 I^{2}C Data Tansactions

The data on SDA line must be stable during the HIGH period of the clock signal (SCL). In other words, state of the data line can only be changed when clock signal is LOW. START and STOP conditions classify the beginning and the end of the data transfer session. A START condition is defined as the SDA signal transitioning from and the end of the data transfer session. A START condition is defined as the SDA signal transitioning from HIGH to LOW while SCL line is HIGH. A STOP condition is defined as the SDA transitioning from LOW to HIGH while SCL is HIGH. The bus leader always generates START and STOP conditions. The bus is considered to be busy after a START condition and free after a STOP condition. During data transmission, the bus leader can generate repeated START conditions. First START and repeated START conditions are functionally equivalent.

Each byte of data has to be followed by an acknowledge bit. The acknowledge related clock pulse is generated by the leader. The leader releases the SDA line (HIGH) during the acknowledge clock pulse. The device pulls down the SDA line during the 9th clock pulse, signifying an acknowledge. The device generates an acknowledge after each byte has been received.

There is one exception to the acknowledge after every byte rule. When the leader is the receiver, the receiver must indicate to the transmitter an end of data by not acknowledging (negative acknowledge) the last byte clocked out of the follower. This negative acknowledge still includes the acknowledge clock pulse (generated by the leader), but the SDA line is not pulled down.

7.5.2 I^{2}C Data Format

The address and data bits are transmitted MSB first with 8-bits length format in each cycle. Each transmission is started with Address Byte 1, which are divided into 7 bits of the chip address and 1 read/write bit. The 8 bits of register address are put in Address Byte 2. The device supports both independent mode and broadcast mode. The auto-increment feature allows writing / reading several consecutive registers within one transmission. If not consecutive, a new transmission must be started.

Table 7-5. I^{2}C Data Format

Address Byte1	Chip Address							R/W
	Bit 7	Bit 6	Bit 5	Bit 4	Bit 3	Bit 2	Bit 1	Bit 0
Independent	0	1	0	1	1	0	0	R: 1 W: 0
Broadcast	0	1	1	0	1	0	0	
Address Byte2	Register Address							
	Bit 7	Bit 6	Bit 5	Bit 4	Bit 3	Bit 2	Bit 1	Bit 0
	7th bit	6th bit	5th bit	4th bit	3rd bit	2nd bit	1st bit	0 bit

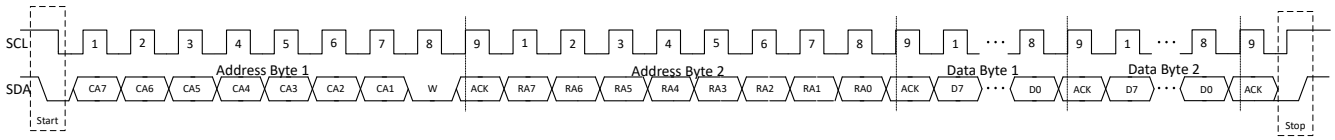

Figure 7-12. I^{2}C Write Timming

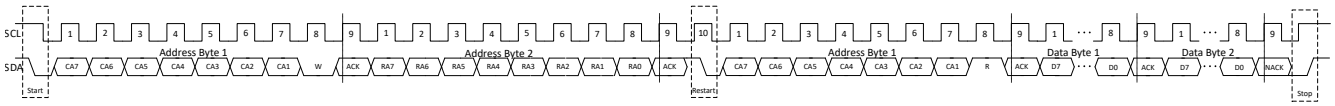

Figure 7-13. I^{2}C Read Timming

Copyright © 2026 Texas Instruments Incorporated

7.5.3 Command Description

The LP5814 has 5 dedicated software commands, Shutdown_command, Reset_command, Update_command, Start_command and Stop_command. Besides the 5 software commands, there is another PAUSE_CONTINUE bit used to control the execution of the autonomous animation.

- Send **Shutdown_command** is one of the 2 methods to make the device enter SHUTDOWN mode as described in Shutdown Mode.
- Send **Reset_command** to reset all registers to default value.
- Send **Update_command** to make the modified value in the device configuration registers as shown in Table 7-6 to take effect. The LP5814 responds to the Update_command only when CHIP_EN = 1.
- Send **Start_command** to start running the configured autonomous animation patterns on the outputs. The LP5814 responds to the Start_command only when CHIP_EN = 1.
- Send **Stop_command** to stop running the configured autonomous animation patterns on the outputs. The LP5814 responds to the Stop_command only when CHIP_EN = 1.
- Set **PAUSE_CONTINUE** bit as 1 to pause the running of the configured autonomous animation patterns on the outputs. Clear **PAUSE_CONTINUE** bit as 0 to continue the running of the previous paused autonomous animation patterns on the outputs. When the PAUSE_CONTINUE = 1, the configured autonomous animation pattern is not started after Start_command is sent.

Table 7-6. Update_command Control Registers

Register Address	Register Acronym
0x01 to 0x05	DEV_CONGIF*x*, *x* = 0, 1, 2, 3, 4

7.6 Register Maps

Table 7-7. Register Maps

Address	Acronym	Bit 7	Bit 6	Bit 5	Bit 4	Bit 3	Bit 2	Bit 1	Bit 0
0h	CHIP_EN	RESERVED							CHIP_EN
1h	DEV_CONFIG0	RESERVED							MAX_CURRENT
2h	DEV_CONFIG1	RESERVED				OUT3_EN	OUT2_EN	OUT1_EN	OUT0_EN
3h	DEV_CONFIG2	LED_FADE_TIME				OUT3_FADE_EN	OUT2_FADE_EN	OUT1_FADE_EN	OUT0_FADE_EN
4h	DEV_CONFIG3	OUT3_EXP_EN	OUT2_EXP_EN	OUT1_EXP_EN	OUT0_EXP_EN	OUT3_AUTO_EN	OUT2_AUTO_EN	OUT1_AUTO_EN	OUT0_AUTO_EN
5h	DEV_CONFIG4	OUT3_ENGINE_CH		OUT2_ENGINE_CH		OUT1_ENGINE_CH		OUT0_ENGINE_CH	
6h	ENGINE_CONFIG0	ENGINE0_ORDER3		ENGINE0_ORDER2		ENGINE0_ORDER1		ENGINE0_ORDER0	
7h	ENGINE_CONFIG1	ENGINE1_ORDER3		ENGINE1_ORDER2		ENGINE1_ORDER1		ENGINE1_ORDER0	
8h	ENGINE_CONFIG2	ENGINE2_ORDER3		ENGINE2_ORDER2		ENGINE2_ORDER1		ENGINE2_ORDER0	
9h	ENGINE_CONFIG3	ENGINE3_ORDER3		ENGINE3_ORDER2		ENGINE3_ORDER1		ENGINE3_ORDER0	
Ah	ENGINE_CONFIG4	E1O3_EN	E1O2_EN	E1O1_EN	E1O0_EN	E0O3_EN	E0O2_EN	E0O1_EN	E0O0_EN
Bh	ENGINE_CONFIG5	E3O3_EN	E3O2_EN	E3O1_EN	E3O0_EN	E2O3_EN	E2O2_EN	E2O1_EN	E2O0_EN
Ch	ENGINE_CONFIG6	ENGINE3_REPT		ENGINE2_REPT		ENGINE1_REPT		ENGINE0_REPT	
Dh	SHUTDOWN_CMD	SHUTDOWN							
Eh	RESET_CMD	RESET							
Fh	UPDATE_CMD	UPDATE							
10h	START_CMD	START							
11h	STOP_CMD	STOP							
12h	PAUSE_CONTINUE	RESERVED							PAUSE_CONTINUE
13h	FLAG_CLR	RESERVED						TSD_CLR	POR_CLR
14h	OUT0_DC	OUT0_DC							
15h	OUT1_DC	OUT1_DC							
16h	OUT2_DC	OUT2_DC							
17h	OUT3_DC	OUT3_DC							
18h	OUT0_MANUAL_PWM	OUT0_MANUAL_PWM							
19h	OUT1_MANUAL_PWM	OUT1_MANUAL_PWM							
1Ah	OUT2_MANUAL_PWM	OUT2_MANUAL_PWM							
1Bh	OUT3_MANUAL_PWM	OUT3_MANUAL_PWM							
1Ch	PATTERN0_PAUSE_TIME	PATTERN0_PAUSE_T0				PATTERN0_PAUSE_T1			
1Dh	PATTERN0_REPEAT_TIME	RESERVED				PATTERN0_PT			
1Eh	PATTERN0_PWM0	PATTERN0_PWM0							
1Fh	PATTERN0_PWM1	PATTERN0_PWM1							
20h	PATTERN0_PWM2	PATTERN0_PWM2							
21h	PATTERN0_PWM3	PATTERN0_PWM3							
22h	PATTERN0_PWM4	PATTERN0_PWM4							
23h	PATTERN0_SLOPER_TIME1	PATTERN0_SLOPER_T1				PATTERN0_SLOPER_T0			
24h	PATTERN0_SLOPER_TIME2	PATTERN0_SLOPER_T3				PATTERN0_SLOPER_T2			
25h	PATTERN1_PAUSE_TIME	PATTERN1_PAUSE_T0				PATTERN1_PAUSE_T1			
26h	PATTERN1_REPEAT_TIME	RESERVED				PATTERN1_PT			
27h	PATTERN1_PWM0	PATTERN1_PWM0							

Copyright © 2026 Texas Instruments Incorporated

Table 7-7. Register Maps (continued)

Address	Acronym	Bit 7	Bit 6	Bit 5	Bit 4	Bit 3	Bit 2	Bit 1	Bit 0
28h	PATTERN1_PWM1	PATTERN1_PWM1							
29h	PATTERN1_PWM2	PATTERN1_PWM2							
2Ah	PATTERN1_PWM3	PATTERN1_PWM3							
2Bh	PATTERN1_PWM4	PATTERN1_PWM4							
2Ch	PATTERN1_SLOPER_TIME1	PATTERN1_SLOPER_T1				PATTERN1_SLOPER_T0			
2Dh	PATTERN1_SLOPER_TIME2	PATTERN1_SLOPER_T3				PATTERN1_SLOPER_T2			
2Eh	PATTERN2_PAUSE_TIME	PATTERN2_PAUSE_T0				PATTERN2_PAUSE_T1			
2Fh	PATTERN2_REPEAT_TIME	RESERVED				PATTERN2_PT			
30h	PATTERN2_PWM0	PATTERN2_PWM0							
31h	PATTERN2_PWM1	PATTERN2_PWM1							
32h	PATTERN2_PWM2	PATTERN2_PWM2							
33h	PATTERN2_PWM3	PATTERN2_PWM3							
34h	PATTERN2_PWM4	PATTERN2_PWM4							
35h	PATTERN2_SLOPER_TIME1	PATTERN2_SLOPER_T1				PATTERN2_SLOPER_T0			
36h	PATTERN2_SLOPER_TIME2	PATTERN2_SLOPER_T3				PATTERN2_SLOPER_T2			
37h	PATTERN3_PAUSE_TIME	PATTERN3_PAUSE_T0				PATTERN3_PAUSE_T1			
38h	PATTERN3_REPEAT_TIME	RESERVED				PATTERN3_PT			
39h	PATTERN3_PWM0	PATTERN3_PWM0							
3Ah	PATTERN3_PWM1	PATTERN3_PWM1							
3Bh	PATTERN3_PWM2	PATTERN3_PWM2							
3Ch	PATTERN3_PWM3	PATTERN3_PWM3							
3Dh	PATTERN3_PWM4	PATTERN3_PWM4							
3Eh	PATTERN3_SLOPER_TIME1	PATTERN3_SLOPER_T1				PATTERN3_SLOPER_T0			
3Fh	PATTERN3_SLOPER_TIME2	PATTERN3_SLOPER_T3				PATTERN3_SLOPER_T2			
40h	FLAG	RESERVED	OUT3_ENGINE_BUSY	OUT2_ENGINE_BUSY	OUT1_ENGINE_BUSY	OUT0_ENGINE_BUSY	ENGINE_BUSY	TSD	POR

Complex bit access types are encoded to fit into small table cells. Table 7-8 shows the codes that are used for access types in this section.

Table 7-8. Register Maps Access Type Codes

Access Type	Code	Description
Read Type		
R	R	Read
Write Type		
W	W	Write
W1C	W 1C	Write 1 to clear
Reset or Default Value		
-n		Value after reset or the default value

7.6.1 CHIP_EN (Address = 0h) [Reset = 00h]

CHIP_EN is shown in Figure 7-14 and described in Table 7-9.

Return to the Summary Table.

Figure 7-14. CHIP_EN

7	6	5	4	3	2	1	0
RESERVED							CHIP_EN
R-0h							R/W-0h

Table 7-9. CHIP_EN Field Descriptions

Bit	Field	Type	Reset	Description
7-1	RESERVED	R	0h	Reserved
0	CHIP_EN	R/W	0h	Device enable. 0x0 = Disable 0x1 = Enable

7.6.2 DEV_CONFIG0 (Address = 1h) [Reset = 00h]

DEV_CONFIG0 is shown in Figure 7-15 and described in Table 7-10.

Return to the Summary Table.

Figure 7-15. DEV_CONFIG0

7	6	5	4	3	2	1	0
RESERVED							MAX_CURRENT
R-0h							R/W-0h

Table 7-10. DEV_CONFIG0 Field Descriptions

Bit	Field	Type	Reset	Description
7-1	RESERVED	R	0h	Reserved
0	MAX_CURRENT	R/W	0h	Max output current. 0x0 = 25.5mA 0x1 = 51mA

7.6.3 DEV_CONFIG1 (Address = 2h) [Reset = 00h]

DEV_CONFIG1 is shown in Figure 7-16 and described in Table 7-11.

Return to the Summary Table.

Figure 7-16. DEV_CONFIG1

7	6	5	4	3	2	1	0
RESERVED				OUT3_EN	OUT2_EN	OUT1_EN	OUT0_EN
R-0h				R/W-0h	R/W-0h	R/W-0h	R/W-0h

Table 7-11. DEV_CONFIG1 Field Descriptions

Bit	Field	Type	Reset	Description
7-4	RESERVED	R	0h	Reserved
3	OUT3_EN	R/W	0h	OUT3 enable. 0x0 = Disable 0x1 = Enable
2	OUT2_EN	R/W	0h	OUT2 enable. 0x0 = Disable 0x1 = Enable
1	OUT1_EN	R/W	0h	OUT1 enable. 0x0 = Disable 0x1 = Enable

Copyright © 2026 Texas Instruments Incorporated

Table 7-11. DEV_CONFIG1 Field Descriptions (continued)

Bit	Field	Type	Reset	Description
0	OUT0_EN	R/W	0h	OUT0 enable. 0x0 = Disable 0x1 = Enable

7.6.4 DEV_CONFIG2 (Address = 3h) [Reset = 00h]

DEV_CONFIG2 is shown in Figure 7-17 and described in Table 7-12.

Return to the Summary Table.

Figure 7-17. DEV_CONFIG2

7	6	5	4	3	2	1	0
LED_FADE_TIME				OUT3_FADE_EN	OUT2_FADE_EN	OUT1_FADE_EN	OUT0_FADE_EN
R/W-0h				R/W-0h	R/W-0h	R/W-0h	R/W-0h

Table 7-12. DEV_CONFIG2 Field Descriptions

Bit	Field	Type	Reset	Description
7-4	LED_FADE_TIME	R/W	0h	OUT fade sloper time. 0x0 = 0s 0x1 = 0.05s 0x2 = 0.10s 0x3 = 0.15s 0x4 = 0.20s 0x5 = 0.25s 0x6 = 0.30s 0x7 = 0.35s 0x8 = 0.40s 0x9 = 0.45s 0xA = 0.50s 0xB = 1.00s 0xC = 2.00s 0xD = 4.00s 0xE = 6.00s 0xF = 8.00s
3	OUT3_FADE_EN	R/W	0h	OUT3 fade in and out enable. 0x0 = Disable 0x1 = Enable
2	OUT2_FADE_EN	R/W	0h	OUT2 fade in and out enable. 0x0 = Disable 0x1 = Enable
1	OUT1_FADE_EN	R/W	0h	OUT1 fade in and out enable. 0x0 = Disable 0x1 = Enable
0	OUT0_FADE_EN	R/W	0h	OUT0 fade in and out enable. 0x0 = Disable 0x1 = Enable

7.6.5 DEV_CONFIG3 (Address = 4h) [Reset = 00h]

DEV_CONFIG3 is shown in Figure 7-18 and described in Table 7-13.

Return to the Summary Table.

Figure 7-18. DEV_CONFIG3

7	6	5	4	3	2	1	0

Copyright © 2026 Texas Instruments Incorporated

Figure 7-18. DEV_CONFIG3 (continued)

OUT3_EXP_EN	OUT2_EXP_EN	OUT1_EXP_EN	OUT0_EXP_EN	OUT3_AUTO_EN	OUT2_AUTO_EN	OUT1_AUTO_EN	OUT0_AUTO_EN
R/W-0h	R/W-0h	R/W-0h	R/W-0h	R/W-0h	R/W-0h	R/W-0h	R/W-0h

Table 7-13. DEV_CONFIG3 Field Descriptions

Bit	Field	Type	Reset	Description
7	OUT3_EXP_EN	R/W	0h	OUT3 exponential PWM dimming enable. 0x0 = Disable 0x1 = Enable
6	OUT2_EXP_EN	R/W	0h	OUT2 exponential PWM dimming enable. 0x0 = Disable 0x1 = Enable
5	OUT1_EXP_EN	R/W	0h	OUT1 exponential PWM dimming enable. 0x0 = Disable 0x1 = Enable
4	OUT0_EXP_EN	R/W	0h	OUT0 exponential PWM dimming enable. 0x0 = Disable 0x1 = Enable
3	OUT3_AUTO_EN	R/W	0h	OUT3 autonomous animation enable. 0x0 = Disable 0x1 = Enable
2	OUT2_AUTO_EN	R/W	0h	OUT2 autonomous animation enable. 0x0 = Disable 0x1 = Enable
1	OUT1_AUTO_EN	R/W	0h	OUT1 autonomous animation enable. 0x0 = Disable 0x1 = Enable
0	OUT0_AUTO_EN	R/W	0h	OUT0 autonomous animation enable. 0x0 = Disable 0x1 = Enable

7.6.6 DEV_CONFIG4 (Address = 5h) [Reset = 00h]

DEV_CONFIG4 is shown in Figure 7-19 and described in Table 7-14.

Return to the Summary Table.

Figure 7-19. DEV_CONFIG4

7	6	5	4	3	2	1	0
OUT3_ENGINE_CH		OUT2_ENGINE_CH		OUT1_ENGINE_CH		OUT0_ENGINE_CH	
R/W-0h		R/W-0h		R/W-0h		R/W-0h	

Table 7-14. DEV_CONFIG4 Field Descriptions

Bit	Field	Type	Reset	Description
7-6	OUT3_ENGINE_CH	R/W	0h	OUT3 engine channel selection. 0x0 = ENGINE0 is selected 0x1 = ENGINE1 is selected 0x2 = ENGINE2 is selected 0x3 = ENGINE3 is selected
5-4	OUT2_ENGINE_CH	R/W	0h	OUT2 engine channel selection. 0x0 = ENGINE0 is selected 0x1 = ENGINE1 is selected 0x2 = ENGINE2 is selected 0x3 = ENGINE3 is selected

Copyright © 2026 Texas Instruments Incorporated

Table 7-14. DEV_CONFIG4 Field Descriptions (continued)

Bit	Field	Type	Reset	Description
3-2	OUT1_ENGINE_CH	R/W	0h	OUT1 engine channel selection. 0x0 = ENGINE0 is selected 0x1 = ENGINE1 is selected 0x2 = ENGINE2 is selected 0x3 = ENGINE3 is selected
1-0	OUT0_ENGINE_CH	R/W	0h	OUT0 engine channel selection. 0x0 = ENGINE0 is selected 0x1 = ENGINE1 is selected 0x2 = ENGINE2 is selected 0x3 = ENGINE3 is selected

7.6.7 ENGINE_CONFIG0 (Address = 6h) [Reset = 00h]

ENGINE_CONFIG0 is shown in Figure 7-20 and described in Table 7-15.

Return to the Summary Table.

Figure 7-20. ENGINE_CONFIG0

7	6	5	4	3	2	1	0
ENGINE0_ORDER3		ENGINE0_ORDER2		ENGINE0_ORDER1		ENGINE0_ORDER0	
R/W-0h		R/W-0h		R/W-0h		R/W-0h	

Table 7-15. ENGINE_CONFIG0 Field Descriptions

Bit	Field	Type	Reset	Description
7-6	ENGINE0_ORDER3	R/W	0h	ENGINE0_ORDER3 pattern selection. 0x0 = PATTERN0 is selected 0x1 = PATTERN1 is selected 0x2 = PATTERN2 is selected 0x3 = PATTERN3 is selected
5-4	ENGINE0_ORDER2	R/W	0h	ENGINE0_ORDER2 pattern selection. 0x0 = PATTERN0 is selected 0x1 = PATTERN1 is selected 0x2 = PATTERN2 is selected 0x3 = PATTERN3 is selected
3-2	ENGINE0_ORDER1	R/W	0h	ENGINE0_ORDER1 pattern selection. 0x0 = PATTERN0 is selected 0x1 = PATTERN1 is selected 0x2 = PATTERN2 is selected 0x3 = PATTERN3 is selected
1-0	ENGINE0_ORDER0	R/W	0h	ENGINE0_ORDER0 pattern selection. 0x0 = PATTERN0 is selected 0x1 = PATTERN1 is selected 0x2 = PATTERN2 is selected 0x3 = PATTERN3 is selected

7.6.8 ENGINE_CONFIG1 (Address = 7h) [Reset = 00h]

ENGINE_CONFIG1 is shown in Figure 7-21 and described in Table 7-16.

Return to the Summary Table.

Figure 7-21. ENGINE_CONFIG1

7	6	5	4	3	2	1	0
ENGINE1_ORDER3		ENGINE1_ORDER2		ENGINE1_ORDER1		ENGINE1_ORDER0	
R/W-0h		R/W-0h		R/W-0h		R/W-0h	

Table 7-16. ENGINE_CONFIG1 Field Descriptions

Bit	Field	Type	Reset	Description
7-6	ENGINE1_ORDER3	R/W	0h	ENGINE1_ORDER3 pattern selection. 0x0 = PATTERN0 is selected 0x1 = PATTERN1 is selected 0x2 = PATTERN2 is selected 0x3 = PATTERN3 is selected
5-4	ENGINE1_ORDER2	R/W	0h	ENGINE1_ORDER2 pattern selection. 0x0 = PATTERN0 is selected 0x1 = PATTERN1 is selected 0x2 = PATTERN2 is selected 0x3 = PATTERN3 is selected
3-2	ENGINE1_ORDER1	R/W	0h	ENGINE1_ORDER1 pattern selection. 0x0 = PATTERN0 is selected 0x1 = PATTERN1 is selected 0x2 = PATTERN2 is selected 0x3 = PATTERN3 is selected
1-0	ENGINE1_ORDER0	R/W	0h	ENGINE1_ORDER0 pattern selection. 0x0 = PATTERN0 is selected 0x1 = PATTERN1 is selected 0x2 = PATTERN2 is selected 0x3 = PATTERN3 is selected

7.6.9 ENGINE_CONFIG2 (Address = 8h) [Reset = 00h]

ENGINE_CONFIG2 is shown in Figure 7-22 and described in Table 7-17.

Return to the Summary Table.

Figure 7-22. ENGINE_CONFIG2

7	6	5	4	3	2	1	0
ENGINE2_ORDER3		ENGINE2_ORDER2		ENGINE2_ORDER1		ENGINE2_ORDER0	
R/W-0h		R/W-0h		R/W-0h		R/W-0h	

Table 7-17. ENGINE_CONFIG2 Field Descriptions

Bit	Field	Type	Reset	Description
7-6	ENGINE2_ORDER3	R/W	0h	ENGINE2_ORDER3 pattern selection. 0x0 = PATTERN0 is selected 0x1 = PATTERN1 is selected 0x2 = PATTERN2 is selected 0x3 = PATTERN3 is selected
5-4	ENGINE2_ORDER2	R/W	0h	ENGINE2_ORDER2 pattern selection. 0x0 = PATTERN0 is selected 0x1 = PATTERN1 is selected 0x2 = PATTERN2 is selected 0x3 = PATTERN3 is selected
3-2	ENGINE2_ORDER1	R/W	0h	ENGINE2_ORDER1 pattern selection. 0x0 = PATTERN0 is selected 0x1 = PATTERN1 is selected 0x2 = PATTERN2 is selected 0x3 = PATTERN3 is selected
1-0	ENGINE2_ORDER0	R/W	0h	ENGINE2_ORDER0 pattern selection. 0x0 = PATTERN0 is selected 0x1 = PATTERN1 is selected 0x2 = PATTERN2 is selected 0x3 = PATTERN3 is selected

Copyright © 2026 Texas Instruments Incorporated

7.6.10 ENGINE_CONFIG3 (Address = 9h) [Reset = 00h]

ENGINE_CONFIG3 is shown in Figure 7-23 and described in Table 7-18.

Return to the Summary Table.

Figure 7-23. ENGINE_CONFIG3

7	6	5	4	3	2	1	0
ENGINE3_ORDER3		ENGINE3_ORDER2		ENGINE3_ORDER1		ENGINE3_ORDER0	
R/W-0h		R/W-0h		R/W-0h		R/W-0h	

Table 7-18. ENGINE_CONFIG3 Field Descriptions

Bit	Field	Type	Reset	Description
7-6	ENGINE3_ORDER3	R/W	0h	ENGINE3_ORDER3 pattern selection. 0x0 = PATTERN0 is selected 0x1 = PATTERN1 is selected 0x2 = PATTERN2 is selected 0x3 = PATTERN3 is selected
5-4	ENGINE3_ORDER2	R/W	0h	ENGINE3_ORDER2 pattern selection. 0x0 = PATTERN0 is selected 0x1 = PATTERN1 is selected 0x2 = PATTERN2 is selected 0x3 = PATTERN3 is selected
3-2	ENGINE3_ORDER1	R/W	0h	ENGINE3_ORDER1 pattern selection. 0x0 = PATTERN0 is selected 0x1 = PATTERN1 is selected 0x2 = PATTERN2 is selected 0x3 = PATTERN3 is selected
1-0	ENGINE3_ORDER0	R/W	0h	ENGINE3_ORDER0 pattern selection. 0x0 = PATTERN0 is selected 0x1 = PATTERN1 is selected 0x2 = PATTERN2 is selected 0x3 = PATTERN3 is selected

7.6.11 ENGINE_CONFIG4 (Address = Ah) [Reset = 00h]

ENGINE_CONFIG4 is shown in Figure 7-24 and described in Table 7-19.

Return to the Summary Table.

Figure 7-24. ENGINE_CONFIG4

7	6	5	4	3	2	1	0
E1O3_EN	E1O2_EN	E1O1_EN	E1O0_EN	E0O3_EN	E0O2_EN	E0O1_EN	E0O0_EN
R/W-0h	R/W-0h	R/W-0h	R/W-0h	R/W-0h	R/W-0h	R/W-0h	R/W-0h

Table 7-19. ENGINE_CONFIG4 Field Descriptions

Bit	Field	Type	Reset	Description
7	E1O3_EN	R/W	0h	ENGINE1_ORDER3 enable. 0x0 = Disable 0x1 = Enable
6	E1O2_EN	R/W	0h	ENGINE1_ORDER2 enable. 0x0 = Disable 0x1 = Enable
5	E1O1_EN	R/W	0h	ENGINE1_ORDER1 enable. 0x0 = Disable 0x1 = Enable
4	E1O0_EN	R/W	0h	ENGINE1_ORDER0 enable. 0x0 = Disable 0x1 = Enable

Copyright © 2026 Texas Instruments Incorporated

Table 7-19. ENGINE_CONFIG4 Field Descriptions (continued)

Bit	Field	Type	Reset	Description
3	E0O3_EN	R/W	0h	ENGINE0_ORDER3 enable. 0x0 = Disable 0x1 = Enable
2	E0O2_EN	R/W	0h	ENGINE0_ORDER2 enable. 0x0 = Disable 0x1 = Enable
1	E0O1_EN	R/W	0h	ENGINE0_ORDER1 enable. 0x0 = Disable 0x1 = Enable
0	E0O0_EN	R/W	0h	ENGINE0_ORDER0 enable. 0x0 = Disable 0x1 = Enable

7.6.12 ENGINE_CONFIG5 (Address = Bh) [Reset = 00h]

ENGINE_CONFIG5 is shown in Figure 7-25 and described in Table 7-20.

Return to the Summary Table.

Figure 7-25. ENGINE_CONFIG5

7	6	5	4	3	2	1	0
E3O3_EN	E3O2_EN	E3O1_EN	E3O0_EN	E2O3_EN	E2O2_EN	E2O1_EN	E2O0_EN
R/W-0h	R/W-0h	R/W-0h	R/W-0h	R/W-0h	R/W-0h	R/W-0h	R/W-0h

Table 7-20. ENGINE_CONFIG5 Field Descriptions

Bit	Field	Type	Reset	Description
7	E3O3_EN	R/W	0h	ENGINE3_ORDER3 enable. 0x0 = Disable 0x1 = Enable
6	E3O2_EN	R/W	0h	ENGINE3_ORDER2 enable. 0x0 = Disable 0x1 = Enable
5	E3O1_EN	R/W	0h	ENGINE3_ORDER1 enable. 0x0 = Disable 0x1 = Enable
4	E3O0_EN	R/W	0h	ENGINE3_ORDER0 enable. 0x0 = Disable 0x1 = Enable
3	E2O3_EN	R/W	0h	ENGINE2_ORDER3 enable. 0x0 = Disable 0x1 = Enable
2	E2O2_EN	R/W	0h	ENGINE2_ORDER2 enable. 0x0 = Disable 0x1 = Enable
1	E2O1_EN	R/W	0h	ENGINE2_ORDER1 enable. 0x0 = Disable 0x1 = Enable
0	E2O0_EN	R/W	0h	ENGINE2_ORDER0 enable. 0x0 = Disable 0x1 = Enable

7.6.13 ENGINE_CONFIG6 (Address = Ch) [Reset = 00h]

ENGINE_CONFIG6 is shown in Figure 7-26 and described in Table 7-21.

Copyright © 2026 Texas Instruments Incorporated

Return to the Summary Table.

Figure 7-26. ENGINE_CONFIG6

7	6	5	4	3	2	1	0
ENGINE3_REPT		ENGINE2_REPT		ENGINE1_REPT		ENGINE0_REPT	
R/W-0h		R/W-0h		R/W-0h		R/W-0h	

Table 7-21. ENGINE_CONFIG6 Field Descriptions

Bit	Field	Type	Reset	Description
7-6	ENGINE3_REPT	R/W	0h	ENGINE3 repeat times. 0x0 = 0 times 0x1 = 1 times 0x2 = 2 times 0x3 = infinite times
5-4	ENGINE2_REPT	R/W	0h	ENGINE2 repeat times. 0x0 = 0 times 0x1 = 1 times 0x2 = 2 times 0x3 = infinite times
3-2	ENGINE1_REPT	R/W	0h	ENGINE1 repeat times. 0x0 = 0 times 0x1 = 1 times 0x2 = 2 times 0x3 = infinite times
1-0	ENGINE0_REPT	R/W	0h	ENGINE0 repeat times. 0x0 = 0 times 0x1 = 1 times 0x2 = 2 times 0x3 = infinite times

7.6.14 SHUTDOWN_CMD (Address = Dh) [Reset = 00h]

SHUTDOWN_CMD is shown in Figure 7-27 and described in Table 7-22.

Return to the Summary Table.

Figure 7-27. SHUTDOWN_CMD

7	6	5	4	3	2	1	0
SHUTDOWN							
W-0h							

Table 7-22. SHUTDOWN_CMD Field Descriptions

Bit	Field	Type	Reset	Description
7-0	SHUTDOWN	W	0h	0x33 = Enter shutdown mode

7.6.15 RESET_CMD (Address = Eh) [Reset = 00h]

RESET_CMD is shown in Figure 7-28 and described in Table 7-23.

Return to the Summary Table.

Figure 7-28. RESET_CMD

7	6	5	4	3	2	1	0
RESET							
W-0h							

Copyright © 2026 Texas Instruments Incorporated

Table 7-23. RESET_CMD Field Descriptions

Bit	Field	Type	Reset	Description
7-0	RESET	W	0h	0xCC = Reset all the registers to default value

7.6.16 UPDATE_CMD (Address = Fh) [Reset = 00h]

UPDATE_CMD is shown in Figure 7-29 and described in Table 7-24.

Return to the Summary Table.

Figure 7-29. UPDATE_CMD

7	6	5	4	3	2	1	0
UPDATE							
W-0h							

Table 7-24. UPDATE_CMD Field Descriptions

Bit	Field	Type	Reset	Description
7-0	UPDATE	W	0h	0x55 = Update all device configuration registers value

7.6.17 START_CMD (Address = 10h) [Reset = 00h]

START_CMD is shown in Figure 7-30 and described in Table 7-25.

Return to the Summary Table.

Figure 7-30. START_CMD

7	6	5	4	3	2	1	0
START							
W-0h							

Table 7-25. START_CMD Field Descriptions

Bit	Field	Type	Reset	Description
7-0	START	W	0h	0xFF = Start autonomous animation

7.6.18 STOP_CMD (Address = 11h) [Reset = 00h]

STOP_CMD is shown in Figure 7-31 and described in Table 7-26.

Return to the Summary Table.

Figure 7-31. STOP_CMD

7	6	5	4	3	2	1	0
STOP							
W-0h							

Table 7-26. STOP_CMD Field Descriptions

Bit	Field	Type	Reset	Description
7-0	STOP	W	0h	0xAA = Stop autonomous animation

7.6.19 PAUSE_CONTINUE (Address = 12h) [Reset = 00h]

PAUSE_CONTINUE is shown in Figure 7-32 and described in Table 7-27.

Copyright © 2026 Texas Instruments Incorporated

Return to the Summary Table.

Figure 7-32. PAUSE_CONTINUE

7	6	5	4	3	2	1	0
RESERVED							PAUSE_CONTINUE
R-0h							R/W-0h

Table 7-27. PAUSE_CONTINUE Field Descriptions

Bit	Field	Type	Reset	Description
7-1	RESERVED	R	0h	Reserved
0	PAUSE_CONTINUE	R/W	0h	Pause or continue autonomous animation. 0x0 = Continue 0x1 = Pause

7.6.20 FLAG_CLR (Address = 13h) [Reset = 00h]

FLAG_CLR is shown in Figure 7-33 and described in Table 7-28.

Return to the Summary Table.

Figure 7-33. FLAG_CLR

7	6	5	4	3	2	1	0
RESERVED						TSD_CLR	POR_CLR
R-0h						W1C-0h	W1C-0h

Table 7-28. FLAG_CLR Field Descriptions

Bit	Field	Type	Reset	Description
7-2	RESERVED	R	0h	Reserved
1	TSD_CLR	W1C	0h	Write 1 to clear TSD flag.
0	POR_CLR	W1C	0h	Write 1 to clear POR flag.

7.6.21 OUT0_DC (Address = 14h) [Reset = 00h]

OUT0_DC is shown in Figure 7-34 and described in Table 7-29.

Return to the Summary Table.

Figure 7-34. OUT0_DC

7	6	5	4	3	2	1	0
OUT0_DC							
R/W-0h							

Table 7-29. OUT0_DC Field Descriptions

Bit	Field	Type	Reset	Description
7-0	OUT0_DC	R/W	0h	OUT0 DC setting.

7.6.22 OUT1_DC (Address = 15h) [Reset = 00h]

OUT1_DC is shown in Figure 7-35 and described in Table 7-30.

Return to the Summary Table.

Copyright © 2026 Texas Instruments Incorporated

Figure 7-35. OUT1_DC

7	6	5	4	3	2	1	0
OUT1_DC							
R/W-0h							

Table 7-30. OUT1_DC Field Descriptions

Bit	Field	Type	Reset	Description
7-0	OUT1_DC	R/W	0h	OUT1 DC setting.

7.6.23 OUT2_DC (Address = 16h) [Reset = 00h]

OUT2_DC is shown in Figure 7-36 and described in Table 7-31.

Return to the Summary Table.

Figure 7-36. OUT2_DC

7	6	5	4	3	2	1	0
OUT2_DC							
R/W-0h							

Table 7-31. OUT2_DC Field Descriptions

Bit	Field	Type	Reset	Description
7-0	OUT2_DC	R/W	0h	OUT2 DC setting.

7.6.24 OUT3_DC (Address = 17h) [Reset = 00h]

OUT3_DC is shown in Figure 7-37 and described in Table 7-32.

Return to the Summary Table.

Figure 7-37. OUT3_DC

7	6	5	4	3	2	1	0
OUT3_DC							
R/W-0h							

Table 7-32. OUT3_DC Field Descriptions

Bit	Field	Type	Reset	Description
7-0	OUT3_DC	R/W	0h	OUT3 DC setting.

7.6.25 OUT0_MANUAL_PWM (Address = 18h) [Reset = 00h]

OUT0_MANUAL_PWM is shown in Figure 7-38 and described in Table 7-33.

Return to the Summary Table.

Figure 7-38. OUT0_MANUAL_PWM

7	6	5	4	3	2	1	0
OUT0_MANUAL_PWM							
R/W-0h							

Copyright © 2026 Texas Instruments Incorporated

Table 7-33. OUT0_MANUAL_PWM Field Descriptions

Bit	Field	Type	Reset	Description
7-0	OUT0_MANUAL_PWM	R/W	0h	OUT0 manual PWM setting. 0x00 = 0% ... 0x80 = 50% ... 0xFF = 100%

7.6.26 OUT1_MANUAL_PWM (Address = 19h) [Reset = 00h]

OUT1_MANUAL_PWM is shown in Figure 7-39 and described in Table 7-34.

Return to the Summary Table.

Figure 7-39. OUT1_MANUAL_PWM

7	6	5	4	3	2	1	0
OUT1_MANUAL_PWM							
R/W-0h							

Table 7-34. OUT1_MANUAL_PWM Field Descriptions

Bit	Field	Type	Reset	Description
7-0	OUT1_MANUAL_PWM	R/W	0h	OUT1 manual PWM setting. 0x00 = 0% ... 0x80 = 50% ... 0xFF = 100%

7.6.27 OUT2_MANUAL_PWM (Address = 1Ah) [Reset = 00h]

OUT2_MANUAL_PWM is shown in Figure 7-40 and described in Table 7-35.

Return to the Summary Table.

Figure 7-40. OUT2_MANUAL_PWM

7	6	5	4	3	2	1	0
OUT2_MANUAL_PWM							
R/W-0h							

Table 7-35. OUT2_MANUAL_PWM Field Descriptions

Bit	Field	Type	Reset	Description
7-0	OUT2_MANUAL_PWM	R/W	0h	OUT2 manual PWM setting. 0x00 = 0% ... 0x80 = 50% ... 0xFF = 100%

7.6.28 OUT3_MANUAL_PWM (Address = 1Bh) [Reset = 00h]

OUT3_MANUAL_PWM is shown in Figure 7-41 and described in Table 7-36.

Return to the Summary Table.

Figure 7-41. OUT3_MANUAL_PWM

7	6	5	4	3	2	1	0

Copyright © 2026 Texas Instruments Incorporated

Figure 7-41. OUT3_MANUAL_PWM (continued)

OUT3_MANUAL_PWM
R/W-0h

Table 7-36. OUT3_MANUAL_PWM Field Descriptions

Bit	Field	Type	Reset	Description
7-0	OUT3_MANUAL_PWM	R/W	0h	OUT3 manual PWM setting. 0x00 = 0% ... 0x80 = 50% ... 0xFF = 100%

7.6.29 PATTERN0_PAUSE_TIME (Address = 1Ch) [Reset = 00h]

PATTERN0_PAUSE_TIME is shown in Figure 7-42 and described in Table 7-37.

Return to the Summary Table.

Figure 7-42. PATTERN0_PAUSE_TIME

7	6	5	4	3	2	1	0
PATTERN0_PAUSE_T0				PATTERN0_PAUSE_T1			
R/W-0h				R/W-0h			

Table 7-37. PATTERN0_PAUSE_TIME Field Descriptions

Bit	Field	Type	Reset	Description
7-4	PATTERN0_PAUSE_T0	R/W	0h	Start animation pause time of pattern0. 0x0 = no pause time 0x1 = 0.05s 0x2 = 0.10s 0x3 = 0.15s 0x4 = 0.20s 0x5 = 0.25s 0x6 = 0.30s 0x7 = 0.35s 0x8 = 0.40s 0x9 = 0.45s 0xA = 0.50s 0xB = 1.00s 0xC = 2.00s 0xD = 4.00s 0xE = 6.00s 0xF = 8.00s
3-0	PATTERN0_PAUSE_T1	R/W	0h	End animation pause time of pattern0. 0x0 = no pause time 0x1 = 0.05s 0x2 = 0.10s 0x3 = 0.15s 0x4 = 0.20s 0x5 = 0.25s 0x6 = 0.30s 0x7 = 0.35s 0x8 = 0.40s 0x9 = 0.45s 0xA = 0.50s 0xB = 1.00s 0xC = 2.00s 0xD = 4.00s 0xE = 6.00s 0xF = 8.00s

Copyright © 2026 Texas Instruments Incorporated

7.6.30 PATTERN0_REPEAT_TIME (Address = 1Dh) [Reset = 00h]

PATTERN0_REPEAT_TIME is shown in Figure 7-43 and described in Table 7-38.

Return to the Summary Table.

Figure 7-43. PATTERN0_REPEAT_TIME

7	6	5	4	3	2	1	0
RESERVED				PATTERN0_PT			
R-0h				R/W-0h			

Table 7-38. PATTERN0_REPEAT_TIME Field Descriptions

Bit	Field	Type	Reset	Description
7-4	RESERVED	R	0h	Reserved
3-0	PATTERN0_PT	R/W	0h	Pattern0 repeat times. 0x0 = 0 time 0x1 = 1 time 0x2 = 2 times 0x3 = 3 times 0x4 = 4 times 0x5 = 5 times 0x6 = 6 times 0x7 = 7 times 0x8 = 8 times 0x9 = 9 times 0xA = 10 times 0xB = 11 times 0xC = 12 times 0xD = 13 times 0xE = 14 times 0xF = infinite times

7.6.31 PATTERN0_PWM0 (Address = 1Eh) [Reset = 00h]

PATTERN0_PWM0 is shown in Figure 7-44 and described in Table 7-39.

Return to the Summary Table.

Figure 7-44. PATTERN0_PWM0

7	6	5	4	3	2	1	0
PATTERN0_PWM0							
R/W-0h							

Table 7-39. PATTERN0_PWM0 Field Descriptions

Bit	Field	Type	Reset	Description
7-0	PATTERN0_PWM0	R/W	0h	Pattern0 PWM0 setting. 0x00 = 0% ... 0x80 = 50% ... 0xFF = 100%

7.6.32 PATTERN0_PWM1 (Address = 1Fh) [Reset = 00h]

PATTERN0_PWM1 is shown in Figure 7-45 and described in Table 7-40.

Return to the Summary Table.

Figure 7-45. PATTERN0_PWM1

7	6	5	4	3	2	1	0
PATTERN0_PWM1							
R/W-0h							

Table 7-40. PATTERN0_PWM1 Field Descriptions

Bit	Field	Type	Reset	Description
7-0	PATTERN0_PWM1	R/W	0h	Pattern0 PWM1 setting. 0x00 = 0% ... 0x80 = 50% ... 0xFF = 100%

7.6.33 PATTERN0_PWM2 (Address = 20h) [Reset = 00h]

PATTERN0_PWM2 is shown in Figure 7-46 and described in Table 7-41.

Return to the Summary Table.

Figure 7-46. PATTERN0_PWM2

7	6	5	4	3	2	1	0
PATTERN0_PWM2							
R/W-0h							

Table 7-41. PATTERN0_PWM2 Field Descriptions

Bit	Field	Type	Reset	Description
7-0	PATTERN0_PWM2	R/W	0h	Pattern0 PWM2 setting. 0x00 = 0% ... 0x80 = 50% ... 0xFF = 100%

7.6.34 PATTERN0_PWM3 (Address = 21h) [Reset = 00h]

PATTERN0_PWM3 is shown in Figure 7-47 and described in Table 7-42.

Return to the Summary Table.

Figure 7-47. PATTERN0_PWM3

7	6	5	4	3	2	1	0
PATTERN0_PWM3							
R/W-0h							

Table 7-42. PATTERN0_PWM3 Field Descriptions

Bit	Field	Type	Reset	Description
7-0	PATTERN0_PWM3	R/W	0h	Pattern0 PWM3 setting. 0x00 = 0% ... 0x80 = 50% ... 0xFF = 100%

Copyright © 2026 Texas Instruments Incorporated

7.6.35 PATTERN0_PWM4 (Address = 22h) [Reset = 00h]

PATTERN0_PWM4 is shown in Figure 7-48 and described in Table 7-43.

Return to the Summary Table.

Figure 7-48. PATTERN0_PWM4

7	6	5	4	3	2	1	0
PATTERN0_PWM4							
R/W-0h							

Table 7-43. PATTERN0_PWM4 Field Descriptions

Bit	Field	Type	Reset	Description
7-0	PATTERN0_PWM4	R/W	0h	Pattern0 PWM4 setting. 0x00 = 0% ... 0x80 = 50% ... 0xFF = 100%

7.6.36 PATTERN0_SLOPER_TIME1 (Address = 23h) [Reset = 00h]

PATTERN0_SLOPER_TIME1 is shown in Figure 7-49 and described in Table 7-44.

Return to the Summary Table.

Figure 7-49. PATTERN0_SLOPER_TIME1

7	6	5	4	3	2	1	0
PATTERN0_SLOPER_T1				PATTERN0_SLOPER_T0			
R/W-0h				R/W-0h			

Table 7-44. PATTERN0_SLOPER_TIME1 Field Descriptions

Bit	Field	Type	Reset	Description
7-4	PATTERN0_SLOPER_T1	R/W	0h	Pattern0 sloper time 1 setting. 0x0 = no sloper time 0x1 = 0.05s 0x2 = 0.10s 0x3 = 0.15s 0x4 = 0.20s 0x5 = 0.25s 0x6 = 0.30s 0x7 = 0.35s 0x8 = 0.40s 0x9 = 0.45s 0xA = 0.50s 0xB = 1.00s 0xC = 2.00s 0xD = 4.00s 0xE = 6.00s 0xF = 8.00s

Copyright © 2026 Texas Instruments Incorporated

Table 7-44. PATTERN0_SLOPER_TIME1 Field Descriptions (continued)

Bit	Field	Type	Reset	Description
3-0	PATTERN0_SLOPER_T0	R/W	0h	Pattern0 sloper time 0 setting. 0x0 = no sloper time 0x1 = 0.05s 0x2 = 0.10s 0x3 = 0.15s 0x4 = 0.20s 0x5 = 0.25s 0x6 = 0.30s 0x7 = 0.35s 0x8 = 0.40s 0x9 = 0.45s 0xA = 0.50s 0xB = 1.00s 0xC = 2.00s 0xD = 4.00s 0xE = 6.00s 0xF = 8.00s

7.6.37 PATTERN0_SLOPER_TIME2 (Address = 24h) [Reset = 00h]

PATTERN0_SLOPER_TIME2 is shown in Figure 7-50 and described in Table 7-45.

Return to the Summary Table.

Figure 7-50. PATTERN0_SLOPER_TIME2

7	6	5	4	3	2	1	0
PATTERN0_SLOPER_T3				PATTERN0_SLOPER_T2			
R/W-0h				R/W-0h			

Table 7-45. PATTERN0_SLOPER_TIME2 Field Descriptions

Bit	Field	Type	Reset	Description
7-4	PATTERN0_SLOPER_T3	R/W	0h	Pattern0 sloper time 3 setting. 0x0 = no sloper time 0x1 = 0.05s 0x2 = 0.10s 0x3 = 0.15s 0x4 = 0.20s 0x5 = 0.25s 0x6 = 0.30s 0x7 = 0.35s 0x8 = 0.40s 0x9 = 0.45s 0xA = 0.50s 0xB = 1.00s 0xC = 2.00s 0xD = 4.00s 0xE = 6.00s 0xF = 8.00s

Copyright © 2026 Texas Instruments Incorporated

Table 7-45. PATTERN0_SLOPER_TIME2 Field Descriptions (continued)

Bit	Field	Type	Reset	Description
3-0	PATTERN0_SLOPER_T2	R/W	0h	Pattern0 sloper time 2 setting. 0x0 = no sloper time 0x1 = 0.05s 0x2 = 0.10s 0x3 = 0.15s 0x4 = 0.20s 0x5 = 0.25s 0x6 = 0.30s 0x7 = 0.35s 0x8 = 0.40s 0x9 = 0.45s 0xA = 0.50s 0xB = 1.00s 0xC = 2.00s 0xD = 4.00s 0xE = 6.00s 0xF = 8.00s

7.6.38 PATTERN1_PAUSE_TIME (Address = 25h) [Reset = 00h]

PATTERN1_PAUSE_TIME is shown in Figure 7-51 and described in Table 7-46.

Return to the Summary Table.

Figure 7-51. PATTERN1_PAUSE_TIME

7	6	5	4	3	2	1	0
PATTERN1_PAUSE_T0				PATTERN1_PAUSE_T1			
R/W-0h				R/W-0h			

Table 7-46. PATTERN1_PAUSE_TIME Field Descriptions

Bit	Field	Type	Reset	Description
7-4	PATTERN1_PAUSE_T0	R/W	0h	Start animation pause time of pattern1. 0x0 = no pause time 0x1 = 0.05s 0x2 = 0.10s 0x3 = 0.15s 0x4 = 0.20s 0x5 = 0.25s 0x6 = 0.30s 0x7 = 0.35s 0x8 = 0.40s 0x9 = 0.45s 0xA = 0.50s 0xB = 1.00s 0xC = 2.00s 0xD = 4.00s 0xE = 6.00s 0xF = 8.00s

Copyright © 2026 Texas Instruments Incorporated

Table 7-46. PATTERN1_PAUSE_TIME Field Descriptions (continued)

Bit	Field	Type	Reset	Description
3-0	PATTERN1_PAUSE_T1	R/W	0h	End animation pause time of pattern1. 0x0 = no pause time 0x1 = 0.05s 0x2 = 0.10s 0x3 = 0.15s 0x4 = 0.20s 0x5 = 0.25s 0x6 = 0.30s 0x7 = 0.35s 0x8 = 0.40s 0x9 = 0.45s 0xA = 0.50s 0xB = 1.00s 0xC = 2.00s 0xD = 4.00s 0xE = 6.00s 0xF = 8.00s

7.6.39 PATTERN1_REPEAT_TIME (Address = 26h) [Reset = 00h]

PATTERN1_REPEAT_TIME is shown in Figure 7-52 and described in Table 7-47.

Return to the Summary Table.

Figure 7-52. PATTERN1_REPEAT_TIME

7	6	5	4	3	2	1	0
RESERVED				PATTERN1_PT			
R-0h				R/W-0h			

Table 7-47. PATTERN1_REPEAT_TIME Field Descriptions

Bit	Field	Type	Reset	Description
7-4	RESERVED	R	0h	Reserved
3-0	PATTERN1_PT	R/W	0h	Pattern1 repeat times. 0x0 = 0 time 0x1 = 1 time 0x2 = 2 times 0x3 = 3 times 0x4 = 4 times 0x5 = 5 times 0x6 = 6 times 0x7 = 7 times 0x8 = 8 times 0x9 = 9 times 0xA = 10 times 0xB = 11 times 0xC = 12 times 0xD = 13 times 0xE = 14 times 0xF = infinite times

7.6.40 PATTERN1_PWM0 (Address = 27h) [Reset = 00h]

PATTERN1_PWM0 is shown in Figure 7-53 and described in Table 7-48.

Return to the Summary Table.

Figure 7-53. PATTERN1_PWM0

7	6	5	4	3	2	1	0

Copyright © 2026 Texas Instruments Incorporated

Figure 7-53. PATTERN1_PWM0 (continued)

PATTERN1_PWM0
R/W-0h

Table 7-48. PATTERN1_PWM0 Field Descriptions

Bit	Field	Type	Reset	Description
7-0	PATTERN1_PWM0	R/W	0h	Pattern1 PWM0 setting. 0x00 = 0% ... 0x80 = 50% ... 0xFF = 100%

7.6.41 PATTERN1_PWM1 (Address = 28h) [Reset = 00h]

PATTERN1_PWM1 is shown in Figure 7-54 and described in Table 7-49.

Return to the Summary Table.

Figure 7-54. PATTERN1_PWM1

7	6	5	4	3	2	1	0
PATTERN1_PWM1							
R/W-0h							

Table 7-49. PATTERN1_PWM1 Field Descriptions

Bit	Field	Type	Reset	Description
7-0	PATTERN1_PWM1	R/W	0h	Pattern1 PWM1 setting. 0x00 = 0% ... 0x80 = 50% ... 0xFF = 100%

7.6.42 PATTERN1_PWM2 (Address = 29h) [Reset = 00h]

PATTERN1_PWM2 is shown in Figure 7-55 and described in Table 7-50.

Return to the Summary Table.

Figure 7-55. PATTERN1_PWM2

7	6	5	4	3	2	1	0
PATTERN1_PWM2							
R/W-0h							

Table 7-50. PATTERN1_PWM2 Field Descriptions

Bit	Field	Type	Reset	Description
7-0	PATTERN1_PWM2	R/W	0h	Pattern1 PWM2 setting. 0x00 = 0% ... 0x80 = 50% ... 0xFF = 100%

Copyright © 2026 Texas Instruments Incorporated

7.6.43 PATTERN1_PWM3 (Address = 2Ah) [Reset = 00h]

PATTERN1_PWM3 is shown in Figure 7-56 and described in Table 7-51.

Return to the Summary Table.

Figure 7-56. PATTERN1_PWM3

7	6	5	4	3	2	1	0
PATTERN1_PWM3							
R/W-0h							

Table 7-51. PATTERN1_PWM3 Field Descriptions

Bit	Field	Type	Reset	Description
7-0	PATTERN1_PWM3	R/W	0h	Pattern1 PWM3 setting. 0x00 = 0% ... 0x80 = 50% ... 0xFF = 100%

7.6.44 PATTERN1_PWM4 (Address = 2Bh) [Reset = 00h]

PATTERN1_PWM4 is shown in Figure 7-57 and described in Table 7-52.

Return to the Summary Table.

Figure 7-57. PATTERN1_PWM4

7	6	5	4	3	2	1	0
PATTERN1_PWM4							
R/W-0h							

Table 7-52. PATTERN1_PWM4 Field Descriptions

Bit	Field	Type	Reset	Description
7-0	PATTERN1_PWM4	R/W	0h	Pattern1 PWM4 setting. 0x00 = 0% ... 0x80 = 50% ... 0xFF = 100%

7.6.45 PATTERN1_SLOPER_TIME1 (Address = 2Ch) [Reset = 00h]

PATTERN1_SLOPER_TIME1 is shown in Figure 7-58 and described in Table 7-53.

Return to the Summary Table.

Figure 7-58. PATTERN1_SLOPER_TIME1

7	6	5	4	3	2	1	0
PATTERN1_SLOPER_T1				PATTERN1_SLOPER_T0			
R/W-0h				R/W-0h			

Copyright © 2026 Texas Instruments Incorporated

Table 7-53. PATTERN1_SLOPER_TIME1 Field Descriptions

Bit	Field	Type	Reset	Description
7-4	PATTERN1_SLOPER_T1	R/W	0h	Pattern1 sloper time 1 setting. 0x0 = no sloper time 0x1 = 0.05s 0x2 = 0.10s 0x3 = 0.15s 0x4 = 0.20s 0x5 = 0.25s 0x6 = 0.30s 0x7 = 0.35s 0x8 = 0.40s 0x9 = 0.45s 0xA = 0.50s 0xB = 1.00s 0xC = 2.00s 0xD = 4.00s 0xE = 6.00s 0xF = 8.00s
3-0	PATTERN1_SLOPER_T0	R/W	0h	Pattern1 sloper time 0 setting. 0x0 = no sloper time 0x1 = 0.05s 0x2 = 0.10s 0x3 = 0.15s 0x4 = 0.20s 0x5 = 0.25s 0x6 = 0.30s 0x7 = 0.35s 0x8 = 0.40s 0x9 = 0.45s 0xA = 0.50s 0xB = 1.00s 0xC = 2.00s 0xD = 4.00s 0xE = 6.00s 0xF = 8.00s

7.6.46 PATTERN1_SLOPER_TIME2 (Address = 2Dh) [Reset = 00h]

PATTERN1_SLOPER_TIME2 is shown in Figure 7-59 and described in Table 7-54.

Return to the Summary Table.

Figure 7-59. PATTERN1_SLOPER_TIME2

7	6	5	4	3	2	1	0
PATTERN1_SLOPER_T3				PATTERN1_SLOPER_T2			
R/W-0h				R/W-0h			

Table 7-54. PATTERN1_SLOPER_TIME2 Field Descriptions

Bit	Field	Type	Reset	Description
7-4	PATTERN1_SLOPER_T3	R/W	0h	Pattern1 sloper time 3 setting. 0x0 = no sloper time 0x1 = 0.05s 0x2 = 0.10s 0x3 = 0.15s 0x4 = 0.20s 0x5 = 0.25s 0x6 = 0.30s 0x7 = 0.35s 0x8 = 0.40s 0x9 = 0.45s 0xA = 0.50s 0xB = 1.00s 0xC = 2.00s 0xD = 4.00s 0xE = 6.00s 0xF = 8.00s
3-0	PATTERN1_SLOPER_T2	R/W	0h	Pattern1 sloper time 2 setting. 0x0 = no sloper time 0x1 = 0.05s 0x2 = 0.10s 0x3 = 0.15s 0x4 = 0.20s 0x5 = 0.25s 0x6 = 0.30s 0x7 = 0.35s 0x8 = 0.40s 0x9 = 0.45s 0xA = 0.50s 0xB = 1.00s 0xC = 2.00s 0xD = 4.00s 0xE = 6.00s 0xF = 8.00s

7.6.47 PATTERN2_PAUSE_TIME (Address = 2Eh) [Reset = 00h]

PATTERN2_PAUSE_TIME is shown in Figure 7-60 and described in Table 7-55.

Return to the Summary Table.

Figure 7-60. PATTERN2_PAUSE_TIME

7	6	5	4	3	2	1	0
PATTERN2_PAUSE_T0				PATTERN2_PAUSE_T1			
R/W-0h				R/W-0h			

Copyright © 2026 Texas Instruments Incorporated

Table 7-55. PATTERN2_PAUSE_TIME Field Descriptions

Bit	Field	Type	Reset	Description
7-4	PATTERN2_PAUSE_T0	R/W	0h	Start animation pause time of pattern2. 0x0 = no pause time 0x1 = 0.05s 0x2 = 0.10s 0x3 = 0.15s 0x4 = 0.20s 0x5 = 0.25s 0x6 = 0.30s 0x7 = 0.35s 0x8 = 0.40s 0x9 = 0.45s 0xA = 0.50s 0xB = 1.00s 0xC = 2.00s 0xD = 4.00s 0xE = 6.00s 0xF = 8.00s
3-0	PATTERN2_PAUSE_T1	R/W	0h	End animation pause time of pattern2. 0x0 = no pause time 0x1 = 0.05s 0x2 = 0.10s 0x3 = 0.15s 0x4 = 0.20s 0x5 = 0.25s 0x6 = 0.30s 0x7 = 0.35s 0x8 = 0.40s 0x9 = 0.45s 0xA = 0.50s 0xB = 1.00s 0xC = 2.00s 0xD = 4.00s 0xE = 6.00s 0xF = 8.00s

7.6.48 PATTERN2_REPEAT_TIME (Address = 2Fh) [Reset = 00h]

PATTERN2_REPEAT_TIME is shown in Figure 7-61 and described in Table 7-56.

Return to the Summary Table.

Figure 7-61. PATTERN2_REPEAT_TIME

7	6	5	4	3	2	1	0
RESERVED				PATTERN2_PT			
R-0h				R/W-0h			

Table 7-56. PATTERN2_REPEAT_TIME Field Descriptions

Bit	Field	Type	Reset	Description
7-4	RESERVED	R	0h	Reserved

Table 7-56. PATTERN2_REPEAT_TIME Field Descriptions (continued)

Bit	Field	Type	Reset	Description
3-0	PATTERN2_PT	R/W	0h	Pattern2 repeat times. 0x0 = 0 time 0x1 = 1 time 0x2 = 2 times 0x3 = 3 times 0x4 = 4 times 0x5 = 5 times 0x6 = 6 times 0x7 = 7 times 0x8 = 8 times 0x9 = 9 times 0xA = 10 times 0xB = 11 times 0xC = 12 times 0xD = 13 times 0xE = 14 times 0xF = infinite times

7.6.49 PATTERN2_PWM0 (Address = 30h) [Reset = 00h]

PATTERN2_PWM0 is shown in Figure 7-62 and described in Table 7-57.

Return to the Summary Table.

Figure 7-62. PATTERN2_PWM0

7	6	5	4	3	2	1	0
PATTERN2_PWM0							
R/W-0h							

Table 7-57. PATTERN2_PWM0 Field Descriptions

Bit	Field	Type	Reset	Description
7-0	PATTERN2_PWM0	R/W	0h	Pattern2 PWM0 setting. 0x00 = 0% ... 0x80 = 50% ... 0xFF = 100%

7.6.50 PATTERN2_PWM1 (Address = 31h) [Reset = 00h]

PATTERN2_PWM1 is shown in Figure 7-63 and described in Table 7-58.

Return to the Summary Table.

Figure 7-63. PATTERN2_PWM1

7	6	5	4	3	2	1	0
PATTERN2_PWM1							
R/W-0h							

Copyright © 2026 Texas Instruments Incorporated

Table 7-58. PATTERN2_PWM1 Field Descriptions

Bit	Field	Type	Reset	Description
7-0	PATTERN2_PWM1	R/W	0h	Pattern2 PWM1 setting. 0x00 = 0% ... 0x80 = 50% ... 0xFF = 100%

7.6.51 PATTERN2_PWM2 (Address = 32h) [Reset = 00h]

PATTERN2_PWM2 is shown in Figure 7-64 and described in Table 7-59.

Return to the Summary Table.

Figure 7-64. PATTERN2_PWM2

7	6	5	4	3	2	1	0
PATTERN2_PWM2							
R/W-0h							

Table 7-59. PATTERN2_PWM2 Field Descriptions

Bit	Field	Type	Reset	Description
7-0	PATTERN2_PWM2	R/W	0h	Pattern2 PWM2 setting. 0x00 = 0% ... 0x80 = 50% ... 0xFF = 100%

7.6.52 PATTERN2_PWM3 (Address = 33h) [Reset = 00h]

PATTERN2_PWM3 is shown in Figure 7-65 and described in Table 7-60.

Return to the Summary Table.

Figure 7-65. PATTERN2_PWM3

7	6	5	4	3	2	1	0
PATTERN2_PWM3							
R/W-0h							

Table 7-60. PATTERN2_PWM3 Field Descriptions

Bit	Field	Type	Reset	Description
7-0	PATTERN2_PWM3	R/W	0h	Pattern2 PWM3 setting. 0x00 = 0% ... 0x80 = 50% ... 0xFF = 100%

7.6.53 PATTERN2_PWM4 (Address = 34h) [Reset = 00h]

PATTERN2_PWM4 is shown in Figure 7-66 and described in Table 7-61.

Return to the Summary Table.

Figure 7-66. PATTERN2_PWM4

7	6	5	4	3	2	1	0

Copyright © 2026 Texas Instruments Incorporated

Figure 7-66. PATTERN2_PWM4 (continued)

PATTERN2_PWM4
R/W-0h

Table 7-61. PATTERN2_PWM4 Field Descriptions

Bit	Field	Type	Reset	Description
7-0	PATTERN2_PWM4	R/W	0h	Pattern2 PWM4 setting. 0x00 = 0% ... 0x80 = 50% ... 0xFF = 100%

7.6.54 PATTERN2_SLOPER_TIME1 (Address = 35h) [Reset = 00h]

PATTERN2_SLOPER_TIME1 is shown in Figure 7-67 and described in Table 7-62.

Return to the Summary Table.

Figure 7-67. PATTERN2_SLOPER_TIME1

7	6	5	4	3	2	1	0
PATTERN2_SLOPER_T1				PATTERN2_SLOPER_T0			
R/W-0h				R/W-0h			

Table 7-62. PATTERN2_SLOPER_TIME1 Field Descriptions

Bit	Field	Type	Reset	Description
7-4	PATTERN2_SLOPER_T1	R/W	0h	Pattern2 sloper time 1 setting. 0x0 = no sloper time 0x1 = 0.05s 0x2 = 0.10s 0x3 = 0.15s 0x4 = 0.20s 0x5 = 0.25s 0x6 = 0.30s 0x7 = 0.35s 0x8 = 0.40s 0x9 = 0.45s 0xA = 0.50s 0xB = 1.00s 0xC = 2.00s 0xD = 4.00s 0xE = 6.00s 0xF = 8.00s
3-0	PATTERN2_SLOPER_T0	R/W	0h	Pattern2 sloper time 0 setting. 0x0 = no sloper time 0x1 = 0.05s 0x2 = 0.10s 0x3 = 0.15s 0x4 = 0.20s 0x5 = 0.25s 0x6 = 0.30s 0x7 = 0.35s 0x8 = 0.40s 0x9 = 0.45s 0xA = 0.50s 0xB = 1.00s 0xC = 2.00s 0xD = 4.00s 0xE = 6.00s 0xF = 8.00s

Copyright © 2026 Texas Instruments Incorporated

7.6.55 PATTERN2_SLOPER_TIME2 (Address = 36h) [Reset = 00h]

PATTERN2_SLOPER_TIME2 is shown in Figure 7-68 and described in Table 7-63.

Return to the Summary Table.

Figure 7-68. PATTERN2_SLOPER_TIME2

7	6	5	4	3	2	1	0
PATTERN2_SLOPER_T3				PATTERN2_SLOPER_T2			
R/W-0h				R/W-0h			

Table 7-63. PATTERN2_SLOPER_TIME2 Field Descriptions

Bit	Field	Type	Reset	Description
7-4	PATTERN2_SLOPER_T3	R/W	0h	Pattern2 sloper time 3 setting. 0x0 = no sloper time 0x1 = 0.05s 0x2 = 0.10s 0x3 = 0.15s 0x4 = 0.20s 0x5 = 0.25s 0x6 = 0.30s 0x7 = 0.35s 0x8 = 0.40s 0x9 = 0.45s 0xA = 0.50s 0xB = 1.00s 0xC = 2.00s 0xD = 4.00s 0xE = 6.00s 0xF = 8.00s
3-0	PATTERN2_SLOPER_T2	R/W	0h	Pattern2 sloper time 2 setting. 0x0 = no sloper time 0x1 = 0.05s 0x2 = 0.10s 0x3 = 0.15s 0x4 = 0.20s 0x5 = 0.25s 0x6 = 0.30s 0x7 = 0.35s 0x8 = 0.40s 0x9 = 0.45s 0xA = 0.50s 0xB = 1.00s 0xC = 2.00s 0xD = 4.00s 0xE = 6.00s 0xF = 8.00s

7.6.56 PATTERN3_PAUSE_TIME (Address = 37h) [Reset = 00h]

PATTERN3_PAUSE_TIME is shown in Figure 7-69 and described in Table 7-64.

Return to the Summary Table.

Figure 7-69. PATTERN3_PAUSE_TIME

7	6	5	4	3	2	1	0
PATTERN3_PAUSE_T0				PATTERN3_PAUSE_T1			
R/W-0h				R/W-0h			

Table 7-64. PATTERN3_PAUSE_TIME Field Descriptions

Bit	Field	Type	Reset	Description
7-4	PATTERN3_PAUSE_T0	R/W	0h	Start animation pause time of pattern3. 0x0 = no pause time 0x1 = 0.05s 0x2 = 0.10s 0x3 = 0.15s 0x4 = 0.20s 0x5 = 0.25s 0x6 = 0.30s 0x7 = 0.35s 0x8 = 0.40s 0x9 = 0.45s 0xA = 0.50s 0xB = 1.00s 0xC = 2.00s 0xD = 4.00s 0xE = 6.00s 0xF = 8.00s
3-0	PATTERN3_PAUSE_T1	R/W	0h	End animation pause time of pattern3. 0x0 = no pause time 0x1 = 0.05s 0x2 = 0.10s 0x3 = 0.15s 0x4 = 0.20s 0x5 = 0.25s 0x6 = 0.30s 0x7 = 0.35s 0x8 = 0.40s 0x9 = 0.45s 0xA = 0.50s 0xB = 1.00s 0xC = 2.00s 0xD = 4.00s 0xE = 6.00s 0xF = 8.00s

7.6.57 PATTERN3_REPEAT_TIME (Address = 38h) [Reset = 00h]

PATTERN3_REPEAT_TIME is shown in Figure 7-70 and described in Table 7-65.

Return to the Summary Table.

Figure 7-70. PATTERN3_REPEAT_TIME

7	6	5	4	3	2	1	0
RESERVED				PATTERN3_PT			
R-0h				R/W-0h			

Table 7-65. PATTERN3_REPEAT_TIME Field Descriptions

Bit	Field	Type	Reset	Description
7-4	RESERVED	R	0h	Reserved

Copyright © 2026 Texas Instruments Incorporated

Table 7-65. PATTERN3_REPEAT_TIME Field Descriptions (continued)

Bit	Field	Type	Reset	Description
3-0	PATTERN3_PT	R/W	0h	Pattern3 repeat times. 0x0 = 0 time 0x1 = 1 time 0x2 = 2 times 0x3 = 3 times 0x4 = 4 times 0x5 = 5 times 0x6 = 6 times 0x7 = 7 times 0x8 = 8 times 0x9 = 9 times 0xA = 10 times 0xB = 11 times 0xC = 12 times 0xD = 13 times 0xE = 14 times 0xF = infinite times

7.6.58 PATTERN3_PWM0 (Address = 39h) [Reset = 00h]

PATTERN3_PWM0 is shown in Figure 7-71 and described in Table 7-66.

Return to the Summary Table.

Figure 7-71. PATTERN3_PWM0

7	6	5	4	3	2	1	0
PATTERN3_PWM0							
R/W-0h							

Table 7-66. PATTERN3_PWM0 Field Descriptions

Bit	Field	Type	Reset	Description
7-0	PATTERN3_PWM0	R/W	0h	Pattern3 PWM0 setting. 0x00 = 0% ... 0x80 = 50% ... 0xFF = 100%

7.6.59 PATTERN3_PWM1 (Address = 3Ah) [Reset = 00h]

PATTERN3_PWM1 is shown in Figure 7-72 and described in Table 7-67.

Return to the Summary Table.

Figure 7-72. PATTERN3_PWM1

7	6	5	4	3	2	1	0
PATTERN3_PWM1							
R/W-0h							

Table 7-67. PATTERN3_PWM1 Field Descriptions

Bit	Field	Type	Reset	Description
7-0	PATTERN3_PWM1	R/W	0h	Pattern3 PWM1 setting. 0x00 = 0% ... 0x80 = 50% ... 0xFF = 100%

7.6.60 PATTERN3_PWM2 (Address = 3Bh) [Reset = 00h]

PATTERN3_PWM2 is shown in Figure 7-73 and described in Table 7-68.

Return to the Summary Table.

Figure 7-73. PATTERN3_PWM2

7	6	5	4	3	2	1	0
PATTERN3_PWM2							
R/W-0h							

Table 7-68. PATTERN3_PWM2 Field Descriptions

Bit	Field	Type	Reset	Description
7-0	PATTERN3_PWM2	R/W	0h	Pattern3 PWM2 setting. 0x00 = 0% ... 0x80 = 50% ... 0xFF = 100%

7.6.61 PATTERN3_PWM3 (Address = 3Ch) [Reset = 00h]

PATTERN3_PWM3 is shown in Figure 7-74 and described in Table 7-69.

Return to the Summary Table.

Figure 7-74. PATTERN3_PWM3

7	6	5	4	3	2	1	0
PATTERN3_PWM3							
R/W-0h							

Table 7-69. PATTERN3_PWM3 Field Descriptions

Bit	Field	Type	Reset	Description
7-0	PATTERN3_PWM3	R/W	0h	Pattern3 PWM3 setting. 0x00 = 0% ... 0x80 = 50% ... 0xFF = 100%

7.6.62 PATTERN3_PWM4 (Address = 3Dh) [Reset = 00h]

PATTERN3_PWM4 is shown in Figure 7-75 and described in Table 7-70.

Return to the Summary Table.

Figure 7-75. PATTERN3_PWM4

7	6	5	4	3	2	1	0

Copyright © 2026 Texas Instruments Incorporated

Figure 7-75. PATTERN3_PWM4 (continued)

PATTERN3_PWM4
R/W-0h

Table 7-70. PATTERN3_PWM4 Field Descriptions

Bit	Field	Type	Reset	Description
7-0	PATTERN3_PWM4	R/W	0h	Pattern3 PWM4 setting. 0x00 = 0% ... 0x80 = 50% ... 0xFF = 100%

7.6.63 PATTERN3_SLOPER_TIME1 (Address = 3Eh) [Reset = 00h]

PATTERN3_SLOPER_TIME1 is shown in Figure 7-76 and described in Table 7-71.

Return to the Summary Table.

Figure 7-76. PATTERN3_SLOPER_TIME1

7	6	5	4	3	2	1	0
PATTERN3_SLOPER_T1				PATTERN3_SLOPER_T0			
R/W-0h				R/W-0h			

Table 7-71. PATTERN3_SLOPER_TIME1 Field Descriptions

Bit	Field	Type	Reset	Description
7-4	PATTERN3_SLOPER_T1	R/W	0h	Pattern3 sloper time 1 setting. 0x0 = no sloper time 0x1 = 0.05s 0x2 = 0.10s 0x3 = 0.15s 0x4 = 0.20s 0x5 = 0.25s 0x6 = 0.30s 0x7 = 0.35s 0x8 = 0.40s 0x9 = 0.45s 0xA = 0.50s 0xB = 1.00s 0xC = 2.00s 0xD = 4.00s 0xE = 6.00s 0xF = 8.00s
3-0	PATTERN3_SLOPER_T0	R/W	0h	Pattern3 sloper time 0 setting. 0x0 = no sloper time 0x1 = 0.05s 0x2 = 0.10s 0x3 = 0.15s 0x4 = 0.20s 0x5 = 0.25s 0x6 = 0.30s 0x7 = 0.35s 0x8 = 0.40s 0x9 = 0.45s 0xA = 0.50s 0xB = 1.00s 0xC = 2.00s 0xD = 4.00s 0xE = 6.00s 0xF = 8.00s

Copyright © 2026 Texas Instruments Incorporated

7.6.64 PATTERN3_SLOPER_TIME2 (Address = 3Fh) [Reset = 00h]

PATTERN3_SLOPER_TIME2 is shown in Figure 7-77 and described in Table 7-72.

Return to the Summary Table.

Figure 7-77. PATTERN3_SLOPER_TIME2

7	6	5	4	3	2	1	0
PATTERN3_SLOPER_T3				PATTERN3_SLOPER_T2			
R/W-0h				R/W-0h			

Table 7-72. PATTERN3_SLOPER_TIME2 Field Descriptions

Bit	Field	Type	Reset	Description
7-4	PATTERN3_SLOPER_T3	R/W	0h	Pattern3 sloper time 3 setting. 0x0 = no sloper time 0x1 = 0.05s 0x2 = 0.10s 0x3 = 0.15s 0x4 = 0.20s 0x5 = 0.25s 0x6 = 0.30s 0x7 = 0.35s 0x8 = 0.40s 0x9 = 0.45s 0xA = 0.50s 0xB = 1.00s 0xC = 2.00s 0xD = 4.00s 0xE = 6.00s 0xF = 8.00s
3-0	PATTERN3_SLOPER_T2	R/W	0h	Pattern3 sloper time 2 setting. 0x0 = no sloper time 0x1 = 0.05s 0x2 = 0.10s 0x3 = 0.15s 0x4 = 0.20s 0x5 = 0.25s 0x6 = 0.30s 0x7 = 0.35s 0x8 = 0.40s 0x9 = 0.45s 0xA = 0.50s 0xB = 1.00s 0xC = 2.00s 0xD = 4.00s 0xE = 6.00s 0xF = 8.00s

7.6.65 FLAG (Address = 40h) [Reset = 00h]

FLAG is shown in Figure 7-78 and described in Table 7-73.

Return to the Summary Table.

Figure 7-78. FLAG

7	6	5	4	3	2	1	0
RESERVED	OUT3_ENGINE_BUSY	OUT2_ENGINE_BUSY	OUT1_ENGINE_BUSY	OUT0_ENGINE_BUSY	ENGINE_BUSY	TSD	POR
R-0h	R-0h	R-0h	R-0h	R-0h	R-0h	R-0h	R-0h

Copyright © 2026 Texas Instruments Incorporated

Table 7-73. FLAG Field Descriptions

Bit	Field	Type	Reset	Description
7	RESERVED	R	0h	Reserved
6	OUT3_ENGINE_BUSY	R	0h	Engine selected by OUT3 busy flag. 0x0 = The selected Engine is not running 0x1 = The selected Engine is running
5	OUT2_ENGINE_BUSY	R	0h	Engine selected by OUT2 busy flag. 0x0 = The selected Engine is not running 0x1 = The selected Engine is running
4	OUT1_ENGINE_BUSY	R	0h	Engine selected by OUT1 busy flag 0x0 = The selected Engine is not running 0x1 = The selected Engine is running
3	OUT0_ENGINE_BUSY	R	0h	Engine selected by OUT0 busy flag. 0x0 = The selected Engine is not running 0x1 = The selected Engine is running
2	ENGINE_BUSY	R	0h	Engine busy flag. 0x0 = All 4 engines are not running 0x1 = At leaset 1 engine is running
1	TSD	R	0h	TSD flag. 0x0 = TSD is not triggered 0x1 = TSD is triggered
0	POR	R	0h	POR flag. 0x0 = POR is not triggered 0x1 = POR is triggered

Copyright © 2026 Texas Instruments Incorporated

8 Application and Implementation

Note

Information in the following applications sections is not part of the TI component specification, and TI does not warrant its accuracy or completeness. TI's customers are responsible for determining suitability of components for their purposes, as well as validating and testing their design implementation to confirm system functionality.

8.1 Application Information

The LP5814 is a 4 channel RGBW LED driver with autonomous animation control. The device has ultra-low operation current at active mode and only consumes 0.25mA when LED current is set at 25mA. In battery powered applications like e-tag, ear bud, e-cigarettes, VR headset, RGB mouse, smart speaker, and other hand-held devices, LP5814 can provide premium LED lighting effects with low power consumption and small package.

8.2 Typical Application

8.2.1 Application

Figure 8-1 shows an example of typical application, which uses one LP5814 to drive RGBW LEDs through I^2C communication.

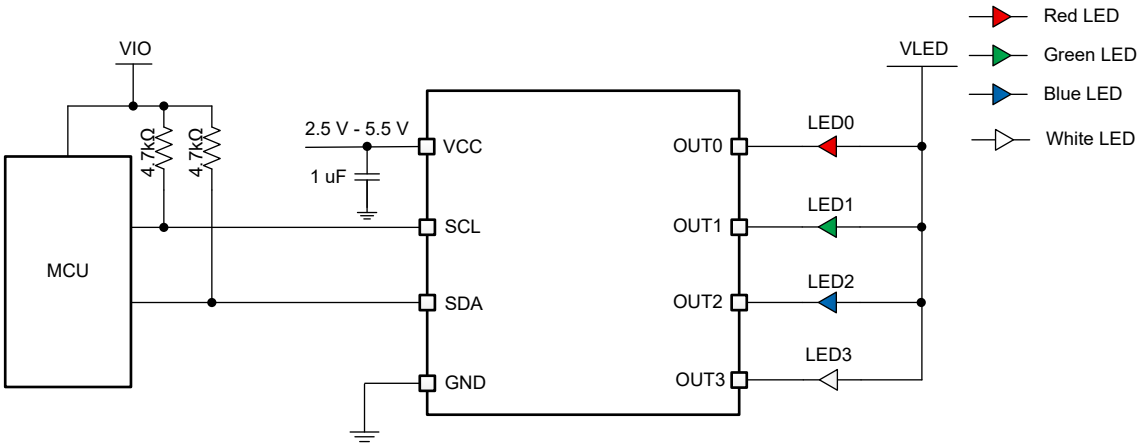

Figure 8-1. Typical Application - LP5814 Driving RGBW LEDs

Copyright © 2026 Texas Instruments Incorporated

8.2.2 Design Parameters

Design Parameters shows the typical design parameters of Application.

Table 8-1. Design Parameters

PARAMETER	VALUE
Input voltage	3.6V to 4.2V by one Li-on battery cell
RGBW LED count	1
LED maximum average current (red, green, blue, white)	51mA, 40.8mA, 40.8mA, 40.8mA
LED PWM frequency	23kHz
Red LED Mode	Manual Mode, Constant ON with 50% PWM Duty Cycle
Green LED Mode	Animation Mode, Blinking with 5Hz Frequency
Blue LED Mode	Animation Mode, Breathing with 1s Exponential Ramping Up and 1s Exponential Ramping Down
White LED Mode	Animation Mode, Blinking with 1Hz Frequency

8.2.3 Detailed Design Procedure

This section showcases the detailed design procedures for LP5814 including components selection, program procedure and examples.

Copyright © 2026 Texas Instruments Incorporated

8.2.3.1 Program Procedure

After VCC powering up, the device is enabled by setting CHIP_EN = 1. Set the maximum current for each output. Then set the device configuration registers to enable the output, select the dimming control mode for each output, and select the animation engine for the output in autonomous animation mode. Finally, Send UPDATE_CMD to make the prior configuration settings take effect.

For the output channel that is configured in manual mode, the output PWM changes immediately when the corresponding manual PWM register value is set.

For the output channel that is configured in autonomous animation mode, firstly, select animation engine for output. Secondly, construct the animation engine by setting the engine configure registers to select the animation pattern to map to the engine order and enable or disable the engine order. Then, build the animation patterns as required by setting pattern unit parameters. Finally, send START_CMD to initiate the autonomous animation.

The detailed program procedure is illustrated in Figure 8-2.

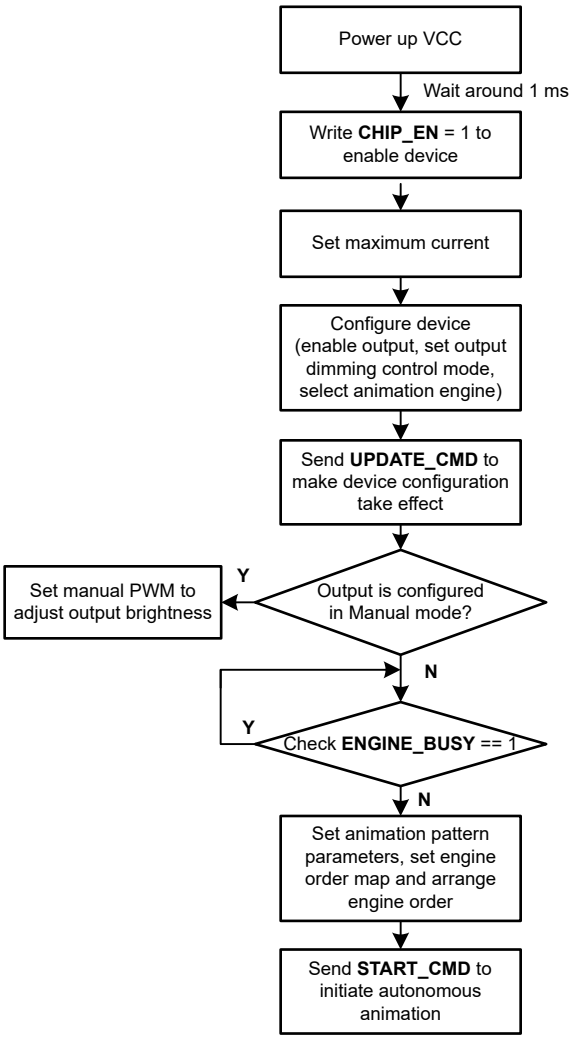

Figure 8-2. Program Procedure

Copyright © 2026 Texas Instruments Incorporated

8.2.3.2 Programming Example

To get the design parameters in Section 8.2.2, the following program steps can be referred.

After VCC powering up and wait around 1ms,

1. Set CHIP_EN = 1 to enable the device(**Write 01h to register 00h**)
2. Set MAX_CURRENT = 1h to set 51mA maximum output LED current (**Write 01h to register 01h**)
3. Set 51mA maximum current for red LEDs, 40.8mA maximum current for green, blue and white LEDs (**Write FFh to registers 14h, write CCh to registers 15h, 16h and 17h**)
4. Enable all 4 LEDs (**Write 0Fh to register 02h**)
5. Set red LED in manual mode, set green, blue and white LEDs in autonomous animation mode, and enable blue LED exponential PWM dimming (**Write 4Eh to register 04h**)
6. Select ENGINE0 for green LED, ENGINE1 for blue LED and ENGINE2 for white LED (**Write 90h to register 05h**)
7. Send **UPDATE_CMD** to make above step2, step4, step5 and step6 configurations take effect (**Write 55h to register 0Fh**)
8. Set red LED PWM duty cycle as 50% (**Write 80h to register 18h**)

   After this step, the read LED is turned on.
9. Check **ENGINE_BUSY** flag by reading the FLAG register (**Read register 40h**)
   - If **ENGINE_BUSY = 1**, send **STOP_CMD** to clear ENGINE_BUSY flag as showed in Internal Engine Busy Status (**Write AAh to register 11h**), then move to next step.
   - If **ENGINE_BUSY = 0**, move to next step directly.
10. Select PATTERN0 for ENGINE0_ORDER0, PATTERN1 for ENGINE1_ORDER0 and PATTERN2 for ENGINE2_ORDER0 (**Write 00h to register 06h, write 01h to register 07h, write 02h to register 08h**)
11. Enable ENGINE0_ORDER0, ENGINE1_ORDER0 and ENGINE2_ORDER0 (**Write 11h to register 0Ah, write 01h to register 0Bh**)
12. Set PATTERN0 parameters as showed in Table 8-2 to realize 5Hz blinking effect on green LED, set PATTERN1 parameters as showed in Table 8-3 to realize breathing effect on blue LED and set PATTERN2 parameters as showed in Table 8-4 to realize 1Hz blinking effect on white LED.
13. Send **START_CMD** to initiate the animation (**Write FFh to register 10h**)

After this step, the red LED keeps constant ON, the green LED keeps blinking with 5Hz frequency and blue LED keeps breathing in 2.4s period and white LED keeps blinking with 1Hz frequency.

Table 8-2. PATTERN0 5Hz Blinking Register Setting

Address	Register	Set Value	Description
1Ch	PATTERN0_PAUSE_TIME	00h	No pause time
1Dh	PATTERN0_REPEAT_TIME	0Fh	Infinite repeat times
1Eh	PATTERN0_PWM0	FFh	PATTERN0_PWM0 = FFh
1Fh	PATTERN0_PWM1	FFh	PATTERN0_PWM1 = FFh
20h	PATTERN0_PWM2	00h	PATTERN0_PWM2 = 0
21h	PATTERN0_PWM3	00h	PATTERN0_PWM3 = 0
22h	PATTERN0_PWM4	00h	PATTERN0_PWM4 = 0
23h	PATTERN0_SLOPER_TIME1	02h	PATTERN0_SLOPER_T1 = 0, PATTERN0_SLOPER_T0 = 0.1s
24h	PATTERN0_SLOPER_TIME2	02h	PATTERN0_SLOPER_T3 = 0, PATTERN0_SLOPER_T2 = 0.1s

Copyright © 2026 Texas Instruments Incorporated

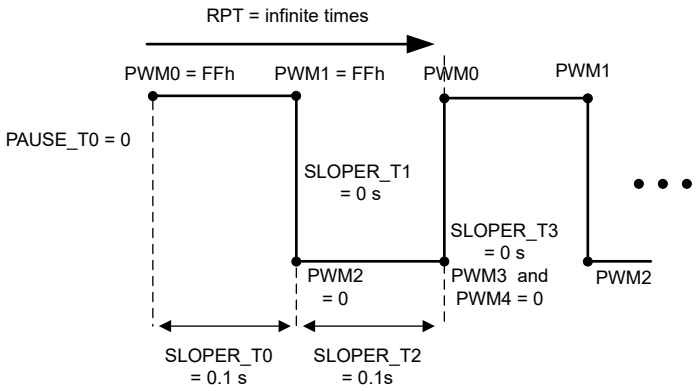

Figure 8-3. PATTERN0 5Hz Blinking Example

Table 8-3. PATTERN1 Breathing Register Setting

Address	Register	Set Value	Description
25h	PATTERN1_PAUSE_TIME	00h	No pause time
26h	PATTERN1_REPEAT_TIME	0Fh	Infinite repeat times
27h	PATTERN1_PWM0	00h	PATTERN1_PWM0 = 0
28h	PATTERN1_PWM1	FFh	PATTERN1_PWM1 = FFh
29h	PATTERN1_PWM2	FFh	PATTERN1_PWM2 = FFh
2Ah	PATTERN1_PWM3	00h	PATTERN1_PWM3 = 0
2Bh	PATTERN1_PWM4	00h	PATTERN1_PWM4 = 0
2Ch	PATTERN1_SLOPER_TIME1	4Bh	PATTERN1_SLOPER_T1 = 0.2s, PATTERN1_SLOPER_T0 = 1s
2Dh	PATTERN1_SLOPER_TIME2	4Bh	PATTERN1_SLOPER_T3 = 0.2s, PATTERN1_SLOPER_T2 = 1s

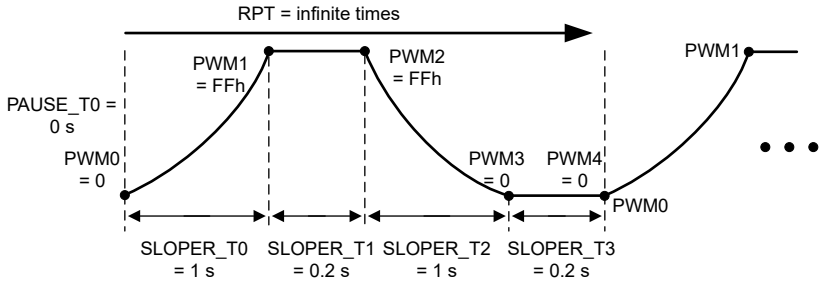

Figure 8-4. PATTERN1 Breathing Example

Table 8-4. PATTERN2 1Hz Blinking Register Setting

Address	Register	Set Value	Description
2Eh	PATTERN2_PAUSE_TIME	00h	No pause time
2Fh	PATTERN2_REPEAT_TIME	0Fh	Infinite repeat times
30h	PATTERN2_PWM0	80h	PATTERN2_PWM0 = FFh
31h	PATTERN2_PWM1	80h	PATTERN2_PWM1 = FFh

Copyright © 2026 Texas Instruments Incorporated

Table 8-4. PATTERN2 1Hz Blinking Register Setting (continued)

Address	Register	Set Value	Description
32h	PATTERN2_PWM2	00h	PATTERN2_PWM2 = 0
33h	PATTERN2_PWM3	00h	PATTERN2_PWM3 = 0
34h	PATTERN2_PWM4	00h	PATTERN2_PWM4 = 0
35h	PATTERN2_SLOPER_TIME1	0Ah	PATTERN2_SLOPER_T1 = 0, PATTERN2_SLOPER_T0 = 0.5s
36h	PATTERN2_SLOPER_TIME2	0Ah	PATTERN2_SLOPER_T3 = 0, PATTERN2_SLOPER_T2 = 0.5s

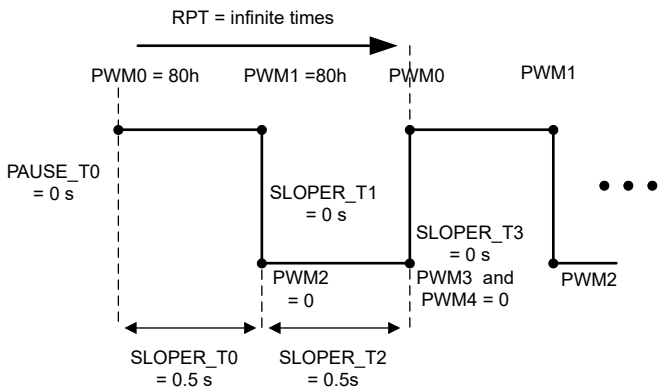

Figure 8-5. PATTERN2 1Hz Blinking Example

8.2.4 Application Performance Plots

The following figures show the application performance plots.

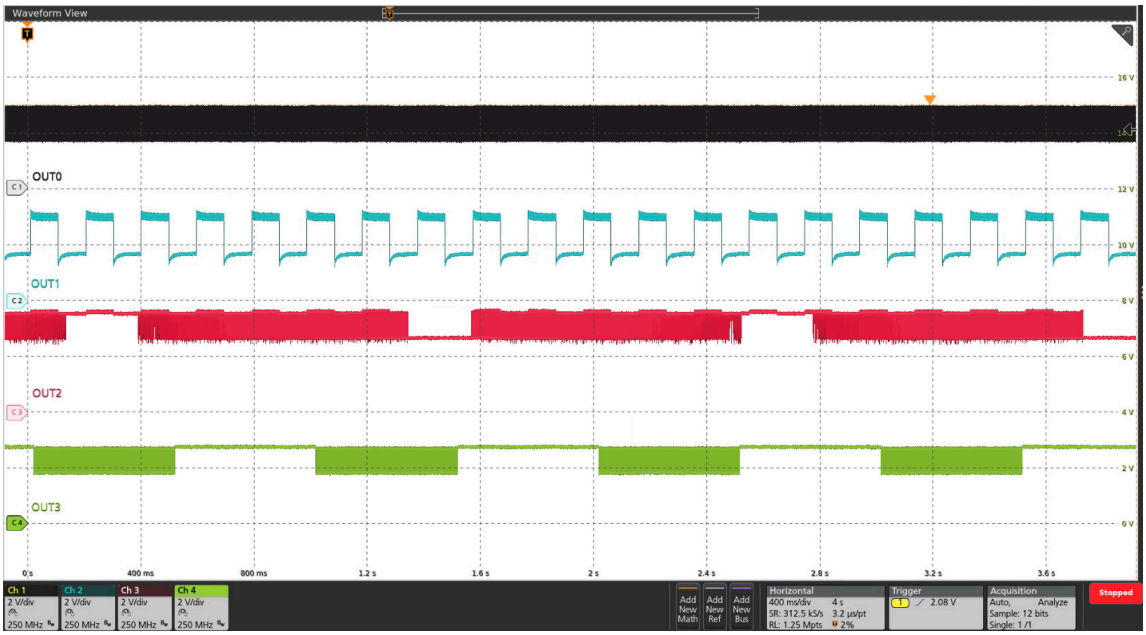

OUT0	Manual Mode, Contsant ON with 50% PWM Duty Cycle
OUT1	Animation Mode, Blinking with 5Hz Frequency
OUT2	Animation Mode, Breathing with 1s Exponential Ramping Up and 1s Ramping Down
OUT3	Animation Mode, Blinking with 1Hz Frequency

Figure 8-6. Current Sinks Waveforms of OUT0, OUT1, OUT2, OUT3

Copyright © 2026 Texas Instruments Incorporated

8.3 Power Supply Recommendations

The LP5814 is designed to operate from an input voltage supply range from 2.5V to 5.5V. This input supply must be well regulated. If the input supply is located more than a few inches from the converter, additional bulk capacitance is required close to the ceramic bypass capacitors. A typical choice is a tantalum or aluminum electrolytic capacitor with a value of 100µF.

8.4 Layout

8.4.1 Layout Guidelines

The input capacitor needs not only to be close to the VCC pin, but also to the GND pin to reduce input supply ripple. For OUTx (x = 0, 1, 2, 3), low inductive and resistive path of switch load loop can help to provide a high slew rate. Therefore, path of adjacent outputs must be short and wide and avoid parallel wiring and narrow trace. For better thermal performance, TI suggest to make copper polygon connected with each pin bigger.

8.4.2 Layout Example

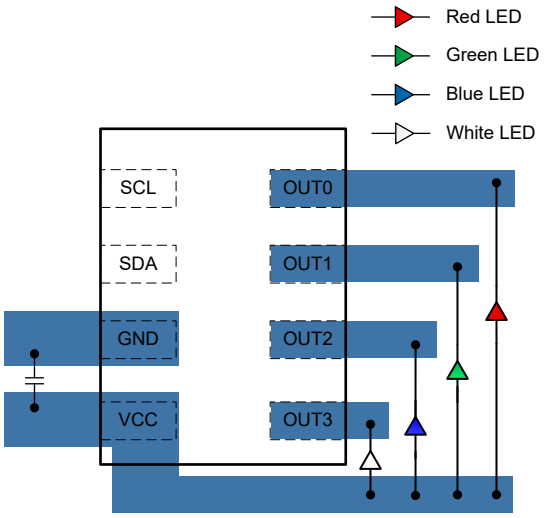

Figure 8-7. LP5814 DRL Package Layout Example

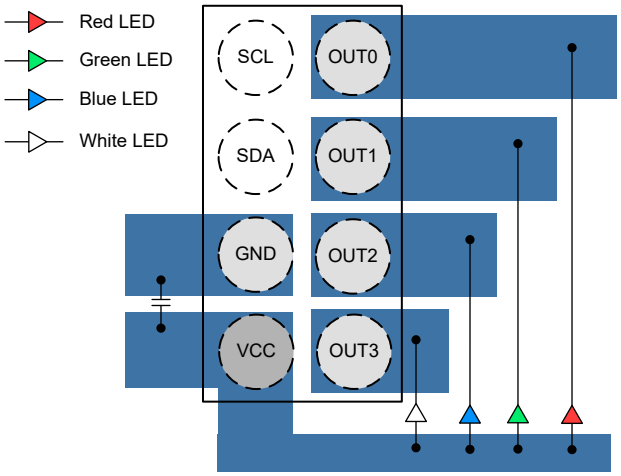

Figure 8-8. LP5814 YCH Package Layout Example

9 Device and Documentation Support

TI offers an extensive line of development tools. Tools and software to evaluate the performance of the device, generate code, and develop solutions are listed below.

9.1 Documentation Support

9.2 Receiving Notification of Documentation Updates

To receive notification of documentation updates, navigate to the device product folder on ti.com. Click on *Notifications* to register and receive a weekly digest of any product information that has changed. For change details, review the revision history included in any revised document.

9.3 Support Resources

TI E2E™ support forums are an engineer's go-to source for fast, verified answers and design help — straight from the experts. Search existing answers or ask your own question to get the quick design help you need.

Linked content is provided "AS IS" by the respective contributors. They do not constitute TI specifications and do not necessarily reflect TI's views; see TI's Terms of Use.

9.4 Trademarks

TI E2E™ is a trademark of Texas Instruments.
All trademarks are the property of their respective owners.

9.5 Electrostatic Discharge Caution

This integrated circuit can be damaged by ESD. Texas Instruments recommends that all integrated circuits be handled with appropriate precautions. Failure to observe proper handling and installation procedures can cause damage.

ESD damage can range from subtle performance degradation to complete device failure. Precision integrated circuits may be more susceptible to damage because very small parametric changes could cause the device not to meet its published specifications.

9.6 Glossary

TI Glossary	This glossary lists and explains terms, acronyms, and definitions.

10 Revision History

NOTE: Page numbers for previous revisions may differ from page numbers in the current version.

Changes from Revision * (March 2025) to Revision A (September 2026)	Page
• Delete device-to-device error description in the *Features* section	1
• Changed I2C address of LP5814IYCHR from 0x2C to 0x2E in Device Comparison Table	3
• Update Thermal Information table in the *Specifications* section	5
• Update Electrical Characteristics table in the *Specifications* section	5

Copyright © 2026 Texas Instruments Incorporated

11 Mechanical, Packaging, and Orderable Information

The following pages include mechanical, packaging, and orderable information. This information is the most current data available for the designated devices. This data is subject to change without notice and revision of this document. For browser-based versions of this datasheet, refer to the left-hand navigation.

YCH0008-C02

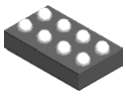

PACKAGE OUTLINE

DSBGA - 0.4 mm max height

DIE SIZE BALL GRID ARRAY

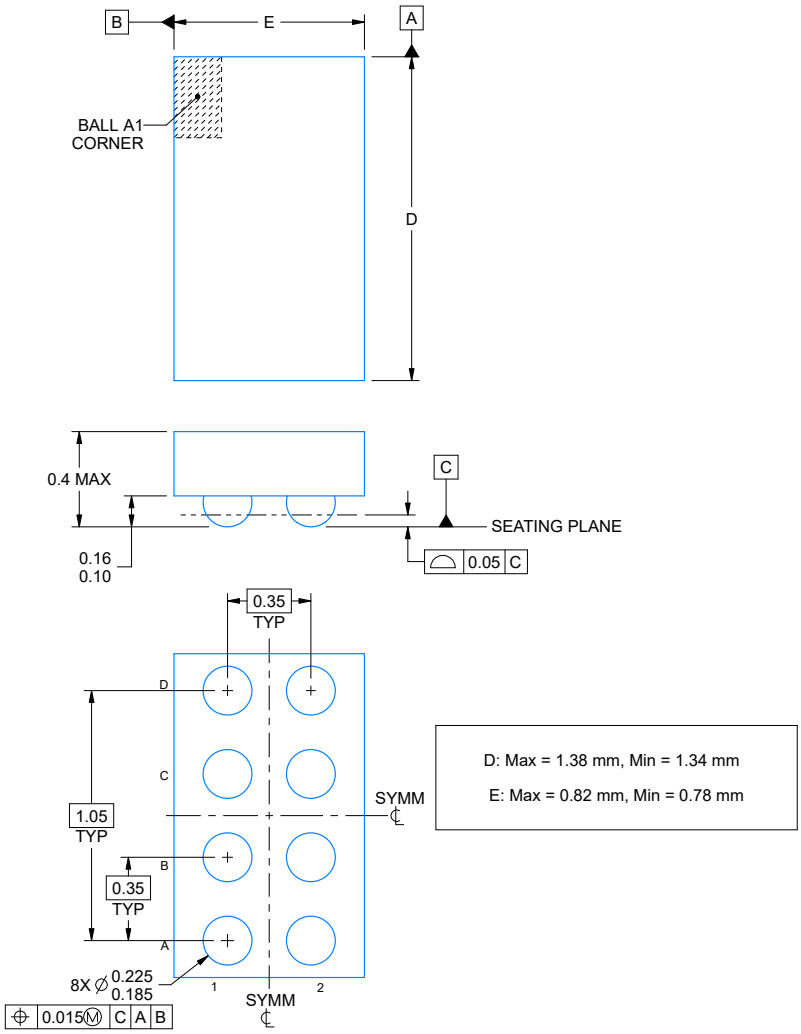

4230869/A 05/2024

NOTES:

1. All linear dimensions are in millimeters. Any dimensions in parenthesis are for reference only. Dimensioning and tolerancing per ASME Y14.5M.
2. This drawing is subject to change without notice.

TEXAS INSTRUMENTS
www.ti.com

Copyright © 2026 Texas Instruments Incorporated

EXAMPLE BOARD LAYOUT

YCH0008-C02 **DSBGA - 0.4 mm max height**

DIE SIZE BALL GRID ARRAY

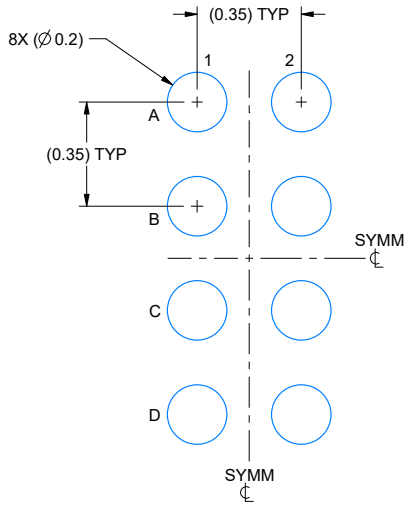

LAND PATTERN EXAMPLE
EXPOSED METAL SHOWN
SCALE: 50X

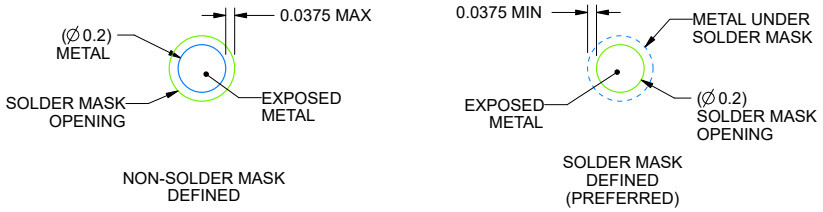

SOLDER MASK DETAILS
NOT TO SCALE

4230869/A 05/2024

NOTES: (continued)

3. Final dimensions may vary due to manufacturing tolerance considerations and also routing constraints. See Texas Instruments Literature No. SNVA009 (www.ti.com/lit/snva009).

Copyright © 2026 Texas Instruments Incorporated

EXAMPLE STENCIL DESIGN

YCH0008-C02 **DSBGA - 0.4 mm max height**

DIE SIZE BALL GRID ARRAY

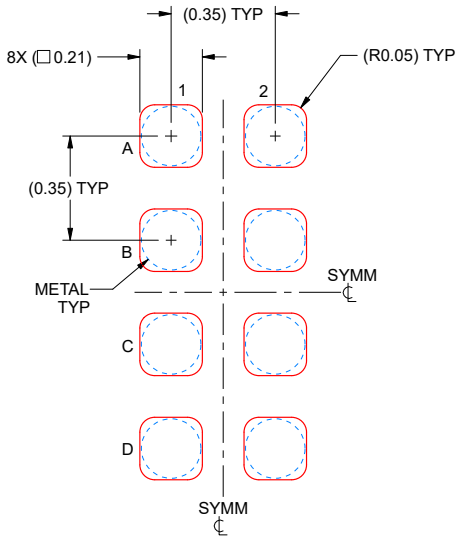

SOLDER PASTE EXAMPLE
BASED ON 0.075 mm THICK STENCIL
SCALE: 50X

4230869/A 05/2024

NOTES: (continued)

4. Laser cutting apertures with trapezoidal walls and rounded corners may offer better paste release.

Copyright © 2026 Texas Instruments Incorporated

PACKAGE OUTLINE

DRL0008A

SOT-5X3 - 0.6 mm max height

PLASTIC SMALL OUTLINE

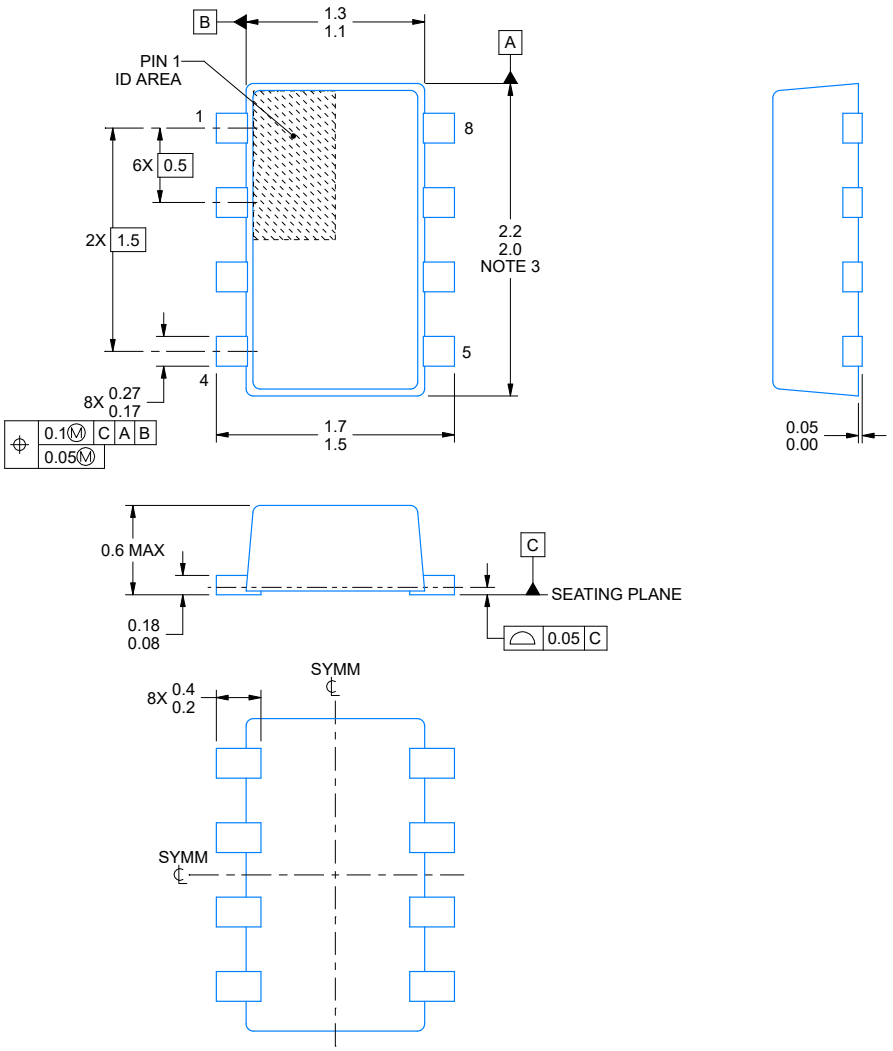

4224486/E 12/2021

NOTES:

1. All linear dimensions are in millimeters. Any dimensions in parenthesis are for reference only. Dimensioning and tolerancing per ASME Y14.5M.
2. This drawing is subject to change without notice.
3. This dimension does not include mold flash, protrusions, or gate burrs. Mold flash, interlead flash, protrusions, or gate burrs shall not exceed 0.15 mm per side.
4. Reference JEDEC Registration MO-293, Variation UDAD

www.ti.com

EXAMPLE BOARD LAYOUT

DRL0008A **SOT-5X3 - 0.6 mm max height**

PLASTIC SMALL OUTLINE

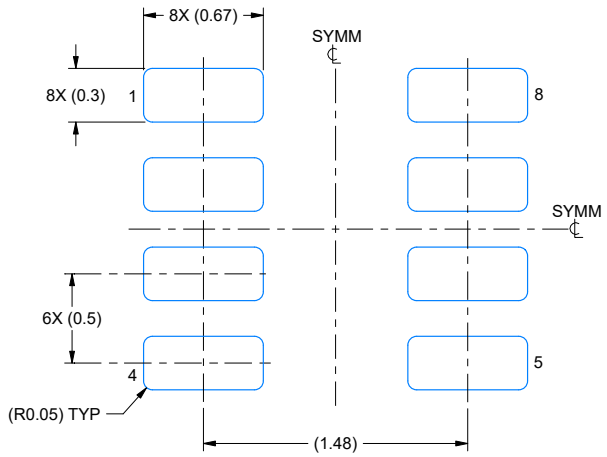

LAND PATTERN EXAMPLE
EXPOSED METAL SHOWN
SCALE:30X

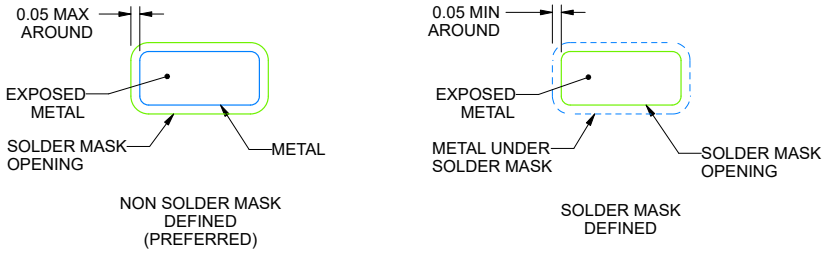

SOLDERMASK DETAILS

4224486/E 12/2021

NOTES: (continued)

5. Publication IPC-7351 may have alternate designs.
6. Solder mask tolerances between and around signal pads can vary based on board fabrication site.
7. Land pattern design aligns to IPC-610, Bottom Termination Component (BTC) solder joint inspection criteria.

Copyright © 2026 Texas Instruments Incorporated

PACKAGING INFORMATION

Orderable part number	Status (1)	Material type (2)	Package | Pins	Package qty | Carrier	RoHS (3)	Lead finish/ Ball material (4)	MSL rating/ Peak reflow (5)	Op temp (°C)	Part marking (6)
LP5814DRLR	Active	Production	SOT-5X3 (DRL) | 8	4000 | LARGE T&R	Yes	SN	Level-1-260C-UNLIM	-40 to 125	5814
LP5814DRLR.A	Active	Production	SOT-5X3 (DRL) | 8	4000 | LARGE T&R	Yes	SN	Level-1-260C-UNLIM	-40 to 125	5814
LP5814YCHR	Active	Production	DSBGA (YCH) | 8	12000 | LARGE T&R	Yes	SNAGCU	Level-1-260C-UNLIM	-40 to 125	G

(1) **Status:** For more details on status, see our product life cycle.

(2) **Material type:** When designated, preproduction parts are prototypes/experimental devices, and are not yet approved or released for full production. Testing and final process, including without limitation quality assurance, reliability performance testing, and/or process qualification, may not yet be complete, and this item is subject to further changes or possible discontinuation. If available for ordering, purchases will be subject to an additional waiver at checkout, and are intended for early internal evaluation purposes only. These items are sold without warranties of any kind.

(3) **RoHS values:** Yes, No, RoHS Exempt. See the TI RoHS Statement for additional information and value definition.

(4) **Lead finish/Ball material:** Parts may have multiple material finish options. Finish options are separated by a vertical ruled line. Lead finish/Ball material values may wrap to two lines if the finish value exceeds the maximum column width.

(5) **MSL rating/Peak reflow:** The moisture sensitivity level ratings and peak solder (reflow) temperatures. In the event that a part has multiple moisture sensitivity ratings, only the lowest level per JEDEC standards is shown. Refer to the shipping label for the actual reflow temperature that will be used to mount the part to the printed circuit board.

(6) **Part marking:** There may be an additional marking, which relates to the logo, the lot trace code information, or the environmental category of the part.

Multiple part markings will be inside parentheses. Only one part marking contained in parentheses and separated by a "~" will appear on a part. If a line is indented then it is a continuation of the previous line and the two combined represent the entire part marking for that device.

Important Information and Disclaimer: The information provided on this page represents TI's knowledge and belief as of the date that it is provided. TI bases its knowledge and belief on information provided by third parties, and makes no representation or warranty as to the accuracy of such information. Efforts are underway to better integrate information from third parties. TI has taken and continues to take reasonable steps to provide representative and accurate information but may not have conducted destructive testing or chemical analysis on incoming materials and chemicals. TI and TI suppliers consider certain information to be proprietary, and thus CAS numbers and other limited information may not be available for release.

In no event shall TI's liability arising out of such information exceed the total purchase price of the TI part(s) at issue in this document sold by TI to Customer on an annual basis.

TAPE AND REEL INFORMATION

REEL DIMENSIONS

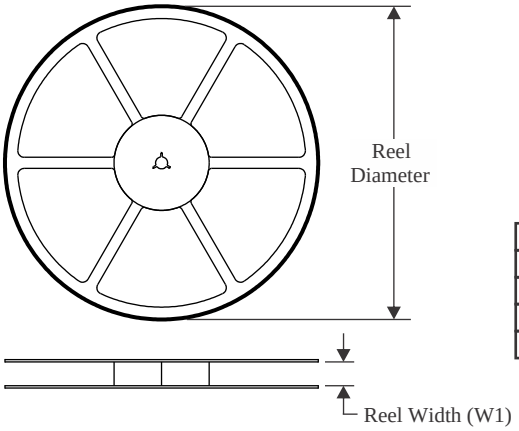

TAPE DIMENSIONS

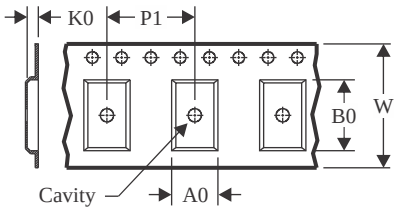

A0	Dimension designed to accommodate the component width
B0	Dimension designed to accommodate the component length
K0	Dimension designed to accommodate the component thickness
W	Overall width of the carrier tape
P1	Pitch between successive cavity centers

QUADRANT ASSIGNMENTS FOR PIN 1 ORIENTATION IN TAPE

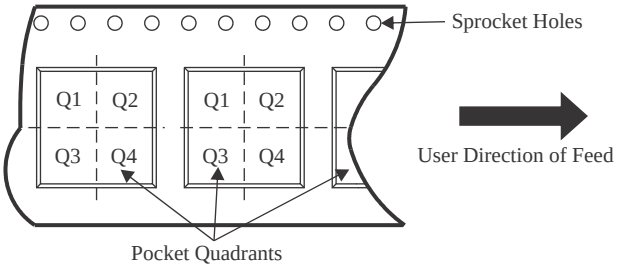

*All dimensions are nominal

Device	Package Type	Package Drawing	Pins	SPQ	Reel Diameter (mm)	Reel Width W1 (mm)	A0 (mm)	B0 (mm)	K0 (mm)	P1 (mm)	W (mm)	Pin1 Quadrant
LP5814DRLR	SOT-5X3	DRL	8	4000	180.0	8.4	2.75	1.9	0.8	4.0	8.0	Q3
LP5814YCHR	DSBGA	YCH	8	12000	180.0	8.4	0.92	1.48	0.43	2.0	8.0	Q1

TAPE AND REEL BOX DIMENSIONS

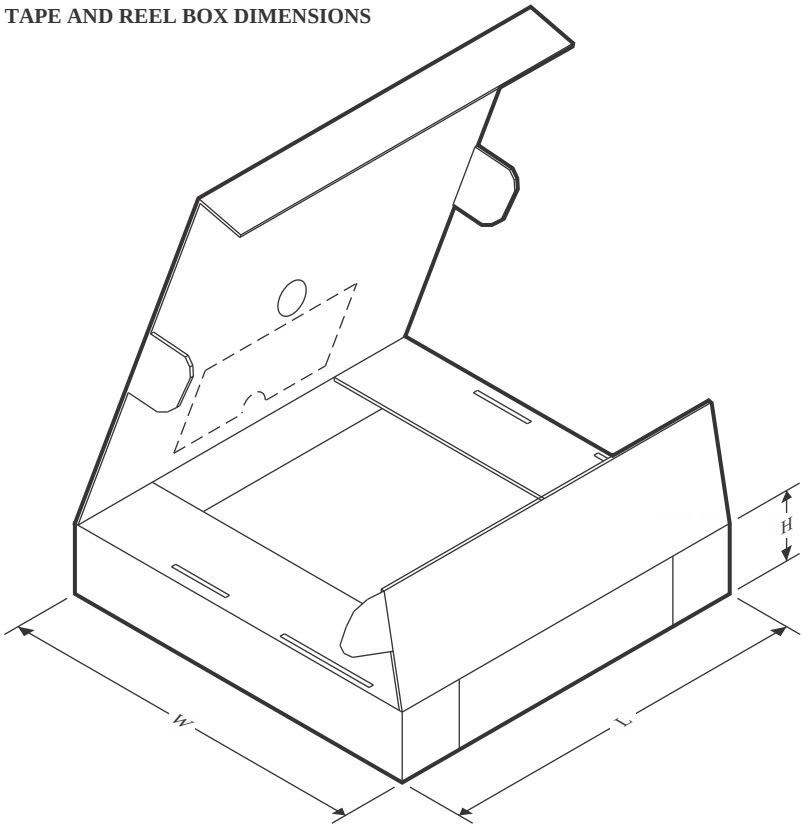

*All dimensions are nominal

Device	Package Type	Package Drawing	Pins	SPQ	Length (mm)	Width (mm)	Height (mm)
LP5814DRLR	SOT-5X3	DRL	8	4000	210.0	185.0	35.0
LP5814YCHR	DSBGA	YCH	8	12000	182.0	182.0	20.0

GENERIC PACKAGE VIEW

DSD 8

WSON - 0.8 mm max height

3 X 3, 0.8 mm pitch

PLASTIC QUAD FLATPACK - NO LEAD

This image is a representation of the package family, actual package may vary.
Refer to the product data sheet for package details.

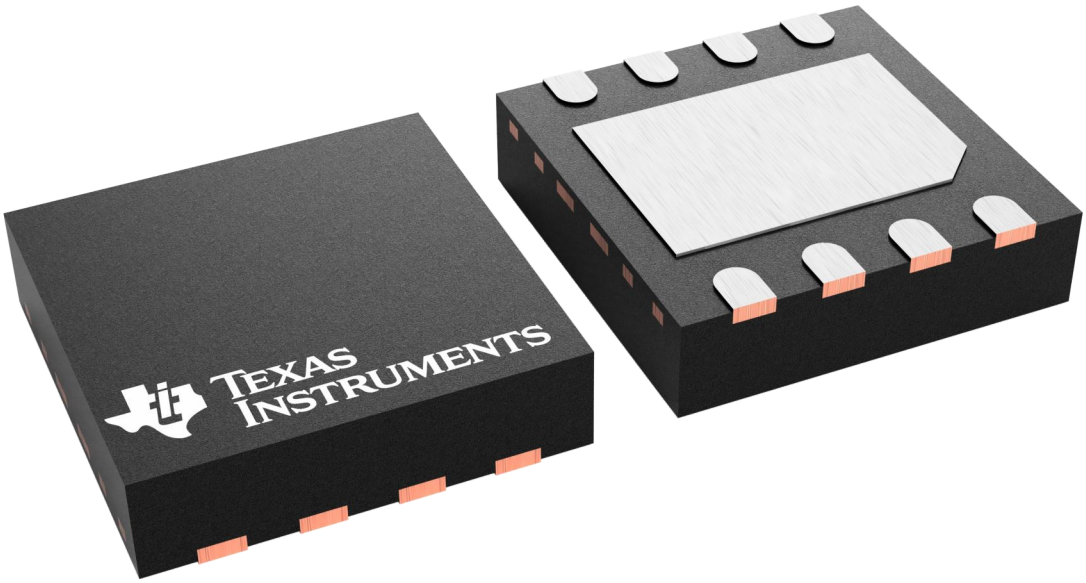

4227007/A

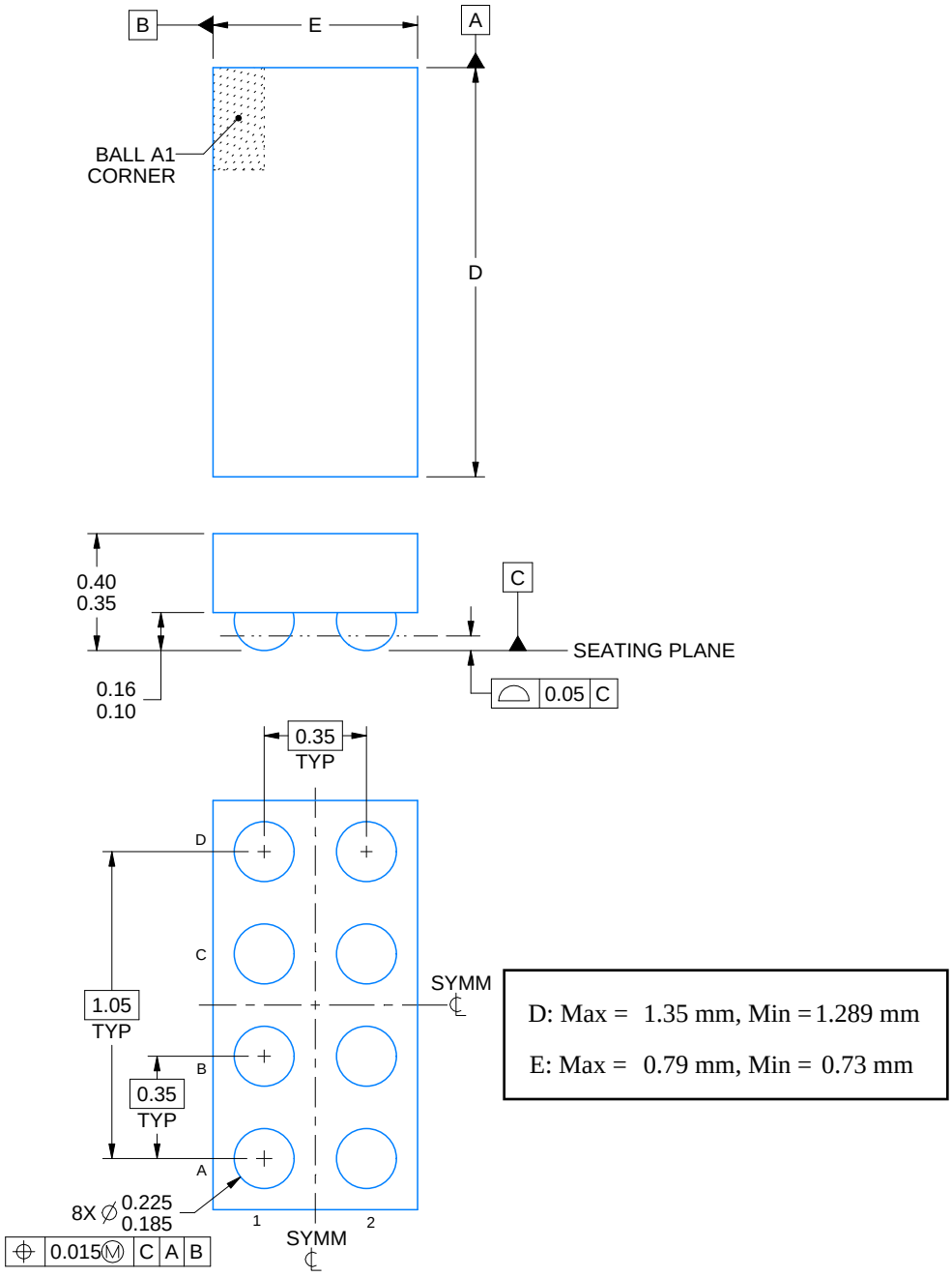

4225328/B 06/2023

NOTES:

1. All linear dimensions are in millimeters. Any dimensions in parenthesis are for reference only. Dimensioning and tolerancing per ASME Y14.5M.
2. This drawing is subject to change without notice.

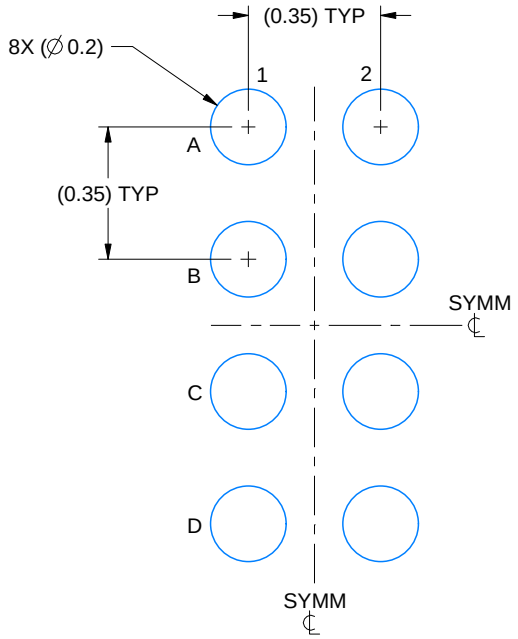

LAND PATTERN EXAMPLE
EXPOSED METAL SHOWN
SCALE: 50X

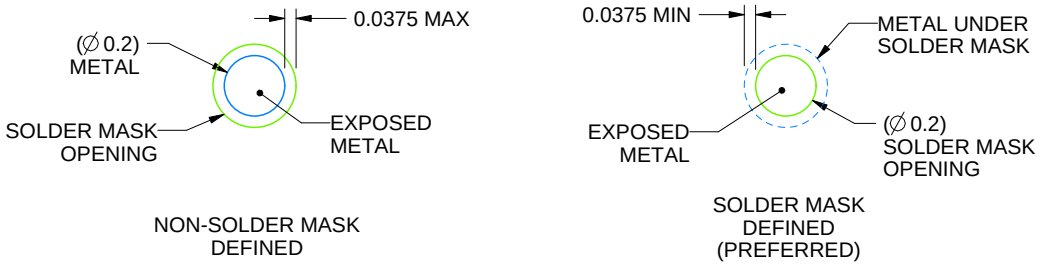

SOLDER MASK DETAILS
NOT TO SCALE

4225328/B 06/2023

NOTES: (continued)

3. Final dimensions may vary due to manufacturing tolerance considerations and also routing constraints.
   See Texas Instruments Literature No. SNVA009 (www.ti.com/lit/snva009).

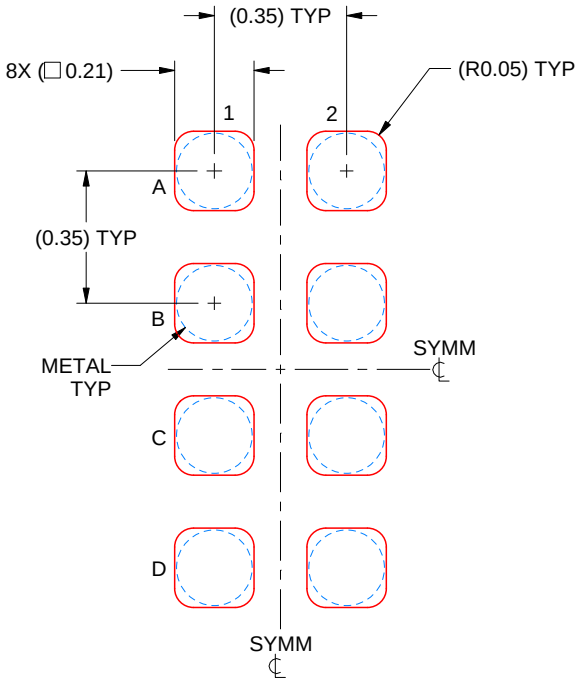

SOLDER PASTE EXAMPLE
BASED ON 0.075 mm THICK STENCIL
SCALE: 50X

4225328/B 06/2023

NOTES: (continued)

4. Laser cutting apertures with trapezoidal walls and rounded corners may offer better paste release.

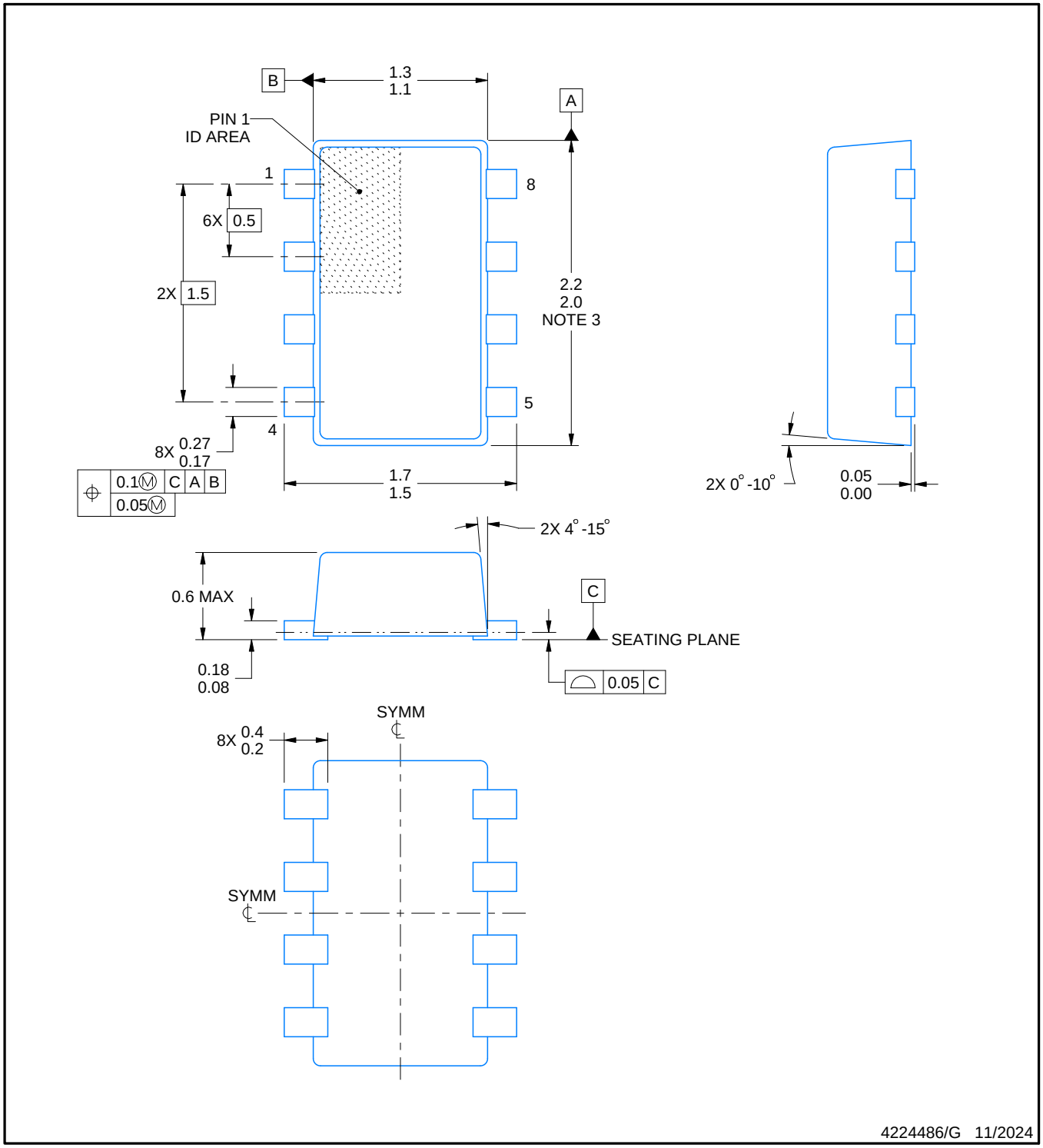

NOTES:

1. All linear dimensions are in millimeters. Any dimensions in parenthesis are for reference only. Dimensioning and tolerancing per ASME Y14.5M.
2. This drawing is subject to change without notice.
3. This dimension does not include mold flash, protrusions, or gate burrs. Mold flash, interlead flash, protrusions, or gate burrs shall not exceed 0.15 mm per side.
4. Reference JEDEC Registration MO-293, Variation UDAD

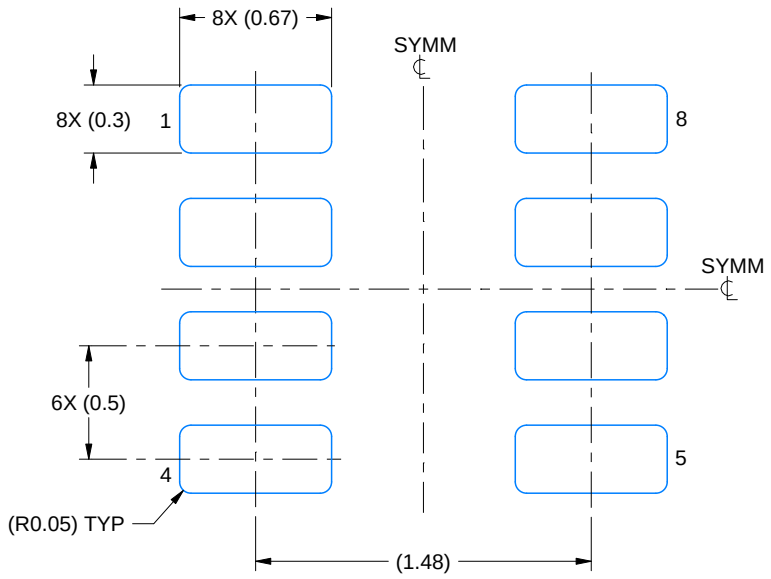

LAND PATTERN EXAMPLE
EXPOSED METAL SHOWN
SCALE:30X

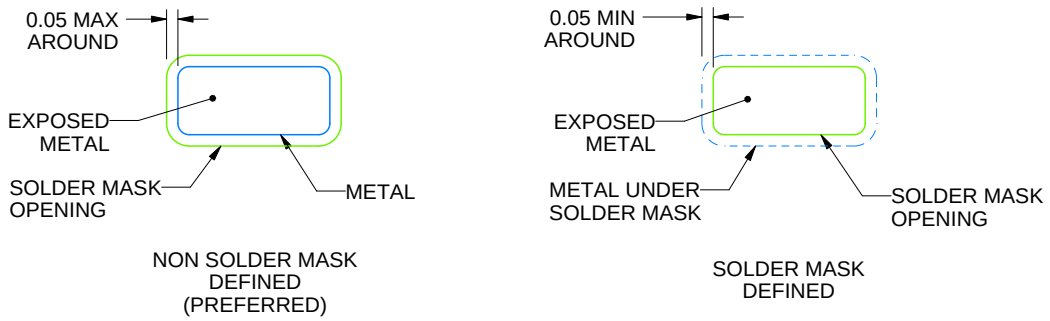

SOLDERMASK DETAILS

4224486/G 11/2024

NOTES: (continued)

5. Publication IPC-7351 may have alternate designs.
6. Solder mask tolerances between and around signal pads can vary based on board fabrication site.
7. Land pattern design aligns to IPC-610, Bottom Termination Component (BTC) solder joint inspection criteria.

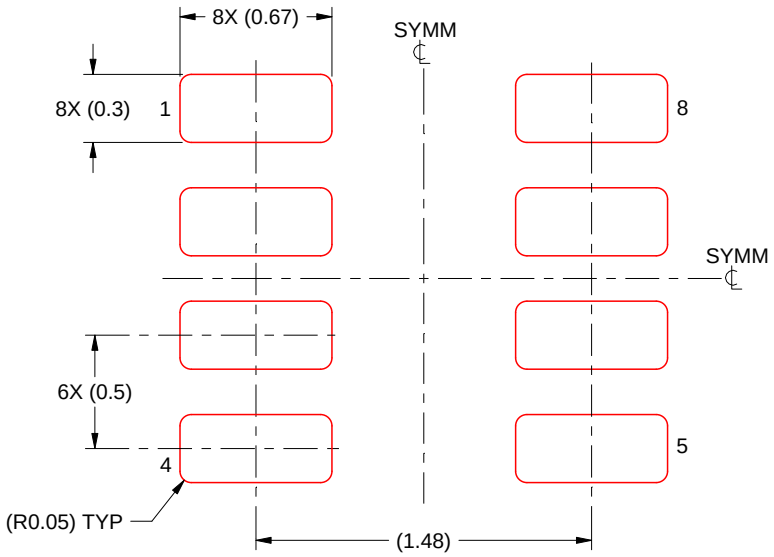

SOLDER PASTE EXAMPLE
BASED ON 0.1 mm THICK STENCIL
SCALE:30X

4224486/G 11/2024

NOTES: (continued)

8. Laser cutting apertures with trapezoidal walls and rounded corners may offer better paste release. IPC-7525 may have alternate design recommendations.
9. Board assembly site may have different recommendations for stencil design.

IMPORTANT NOTICE AND DISCLAIMER

TI PROVIDES TECHNICAL AND RELIABILITY DATA (INCLUDING DATASHEETS), DESIGN RESOURCES (INCLUDING REFERENCE DESIGNS), APPLICATION OR OTHER DESIGN ADVICE, WEB TOOLS, SAFETY INFORMATION, AND OTHER RESOURCES “AS IS” AND WITH ALL FAULTS, AND DISCLAIMS ALL WARRANTIES, EXPRESS AND IMPLIED, INCLUDING WITHOUT LIMITATION ANY IMPLIED WARRANTIES OF MERCHANTABILITY, FITNESS FOR A PARTICULAR PURPOSE OR NON-INFRINGEMENT OF THIRD PARTY INTELLECTUAL PROPERTY RIGHTS.

These resources are intended for skilled developers designing with TI products. You are solely responsible for (1) selecting the appropriate TI products for your application, (2) designing, validating and testing your application, and (3) ensuring your application meets applicable standards, and any other safety, security, regulatory or other requirements.

These resources are subject to change without notice. TI grants you permission to use these resources only for development of an application that uses the TI products described in the resource. Other reproduction and display of these resources is prohibited. No license is granted to any other TI intellectual property right or to any third party intellectual property right. TI disclaims responsibility for, and you fully indemnify TI and its representatives against any claims, damages, costs, losses, and liabilities arising out of your use of these resources.

TI’s products are provided subject to TI’s Terms of Sale, TI’s General Quality Guidelines, or other applicable terms available either on ti.com or provided in conjunction with such TI products. TI’s provision of these resources does not expand or otherwise alter TI’s applicable warranties or warranty disclaimers for TI products. Unless TI explicitly designates a product as custom or customer-specified, TI products are standard, catalog, general purpose devices.

TI objects to and rejects any additional or different terms you may propose.

Copyright © 2026, Texas Instruments Incorporated

Last updated 10/2025