AM437x Sitara™ Processors

1 Device Overview

1.1 Features

- Highlights
  - Sitara™ ARM® Cortex®-A9 32-Bit RISC Processor With Processing Speed up to 1000 MHz
    - NEON™ SIMD Coprocessor and Vector Floating Point (VFPv3) Coprocessor
    - 32KB of Both L1 Instruction and Data Cache
    - 256KB of L2 Cache or L3 RAM
  - 32-Bit LPDDR2, DDR3, and DDR3L Support
  - General-Purpose Memory Support (NAND, NOR, SRAM) Supporting up to 16-Bit ECC
  - SGX530 Graphics Engine
  - Display Subsystem
  - Programmable Real-Time Unit Subsystem and Industrial Communication Subsystem (PRU-ICSS)
  - Real-Time Clock (RTC)
  - Up to Two USB 2.0 High-Speed Dual-Role (Host or Device) Ports With Integrated PHY
  - 10, 100, and 1000 Ethernet Switch Supporting up to Two Ports
  - Serial Interfaces:
    - Two Controller Area Network (CAN) Ports
    - Six UARTs, Two McASPs, Five McSPIs, Three I^2C Ports, One QSPI, and One HDQ or 1-Wire
  - Security
    - Crypto Hardware Accelerators (AES, SHA, RNG, DES, and 3DES)
    - Secure Boot (Avaliable Only on AM437x High-Security [AM437xHS] Devices)
  - Two 12-Bit Successive Approximation Register (SAR) ADCs
  - Up to Three 32-Bit Enhanced Capture (eCAP) Modules
  - Up to Three Enhanced Quadrature Encoder Pulse (eQEP) Modules
  - Up to Six Enhanced High-Resolution PWM (eHRPWM) Modules
- MPU Subsystem
  - ARM Cortex-A9 32-Bit RISC Microprocessor With Processing Speed up to 1000 MHz
  - 32KB of Both L1 Instruction and Data Cache
  - 256KB of L2 Cache (Option to Configure as L3 RAM)
  - 256KB of On-Chip Boot ROM
  - 64KB of On-Chip RAM
  - Secure Control Module (SCM) (Avaliable Only on AM437xHS Devices)
  - Emulation and Debug
    - JTAG
    - Embedded Trace Buffer
  - Interrupt Controller
- On-Chip Memory (Shared L3 RAM)
  - 256KB of General-Purpose On-Chip Memory Controller (OCMC) RAM
  - Accessible to All Masters
  - Supports Retention for Fast Wakeup
  - Up to 512KB of Total Internal RAM (256KB of ARM Memory Configured as L3 RAM + 256KB of OCMC RAM)
- External Memory Interfaces (EMIFs)
  - DDR Controllers:
    - LPDDR2: 266-MHz Clock (LPDDR2-533 Data Rate)
    - DDR3 and DDR3L: 400-MHz Clock (DDR-800 Data Rate)
    - 32-Bit Data Bus
    - 2GB of Total Addressable Space
    - Supports One x32, Two x16, or Four x8 Memory Device Configurations
- General-Purpose Memory Controller (GPMC)
  - Flexible 8- and 16-Bit Asynchronous Memory Interface With up to Seven Chip Selects (NAND, NOR, Muxed-NOR, and SRAM)
  - Uses BCH Code to Support 4-, 8-, or 16-Bit ECC
  - Uses Hamming Code to Support 1-Bit ECC
- Error Locator Module (ELM)
  - Used With the GPMC to Locate Addresses of Data Errors From Syndrome Polynomials Generated Using a BCH Algorithm
  - Supports 4-, 8-, and 16-Bit Per 512-Byte Block Error Location Based on BCH Algorithms
- Programmable Real-Time Unit Subsystem and Industrial Communication Subsystem (PRU-ICSS)
  - Supports Protocols such as EtherCAT®, PROFIBUS®, PROFINET®, and EtherNet/IP™, EnDat 2.2, and More
  - Two Programmable Real-Time Units (PRUs) Subsystems With Two PRU Cores Each
    - Each Core is a 32-Bit Load and Store RISC Processor Capable of Running at 200 MHz

An IMPORTANT NOTICE at the end of this data sheet addresses availability, warranty, changes, use in safety-critical applications, intellectual property matters and other important disclaimers. PRODUCTION DATA.

  - 12KB (PRU-ICSS1), 4KB (PRU-ICSS0) of Instruction RAM With Single-Error Detection (Parity)
  - 8KB (PRU-ICSS1), 4KB (PRU-ICSS0) of Data RAM With Single-Error Detection (Parity)
  - Single-Cycle 32-Bit Multiplier With 64-Bit Accumulator
  - Enhanced GPIO Module Provides Shift-In and Shift-Out Support and Parallel Latch on External Signal
- 12KB (PRU-ICSS1 Only) of Shared RAM With Single-Error Detection (Parity)
- Three 120-Byte Register Banks Accessible by Each PRU
- Interrupt Controller Module (INTC) for Handling System Input Events
- Local Interconnect Bus for Connecting Internal and External Masters to the Resources Inside the PRU-ICSS
- Peripherals Inside the PRU-ICSS
  - One UART Port With Flow Control Pins, Supports up to 12 Mbps
  - One eCAP Module
  - Two MII Ethernet Ports that Support Industrial Ethernet, such as EtherCAT
  - One MDIO Port
- Industrial Communication is Supported by Two PRU-ICSS Subsystems

• Power, Reset, and Clock Management (PRCM) Module
- Controls the Entry and Exit of Deep-Sleep Modes
- Responsible for Sleep Sequencing, Power Domain Switch-Off Sequencing, Wake-Up Sequencing, and Power Domain Switch-On Sequencing
- Clocks
  - Integrated High-Frequency Oscillator Used to Generate a Reference Clock (19.2, 24, 25, and 26 MHz) for Various System and Peripheral Clocks
  - Supports Individual Clock Enable and Disable Control for Subsystems and Peripherals to Facilitate Reduced Power Consumption
  - Five ADPLLs to Generate System Clocks (MPU Subsystem, DDR Interface, USB, and Peripherals [MMC and SD, UART, SPI, I^2C], L3, L4, Ethernet, GFX [SGX530], and LCD Pixel Clock)
- Power
  - Two Nonswitchable Power Domains (RTC and Wake-Up Logic [WAKE-UP])
  - Three Switchable Power Domains (MPU Subsystem, SGX530 [GFX], Peripherals and Infrastructure [PER])
  - Dynamic Voltage Frequency Scaling (DVFS)

• Real-Time Clock (RTC)
- Real-Time Date (Day, Month, Year, and Day of Week) and Time (Hours, Minutes, and Seconds) Information
- Internal 32.768-kHz Oscillator, RTC Logic, and 1.1-V Internal LDO
- Independent Power-On-Reset (RTC_PWRONRSTn) Input
- Dedicated Input Pin (RTC_WAKEUP) for External Wake Events
- Programmable Alarm Can Generate Internal Interrupts to the PRCM for Wakeup or Cortex-A9 for Event Notification
- Programmable Alarm Can Be Used With External Output (RTC_PMIC_EN) to Enable the Power-Management IC to Restore Non-RTC Power Domains

• Peripherals
- Up to Two USB 2.0 High-Speed Dual-Role (Host or Device) Ports With Integrated PHY
- Up to Two Industrial Gigabit Ethernet MACs (10, 100, and 1000 Mbps)
  - Integrated Switch
  - Each MAC Supports MII, RMII, and RGMII and MDIO Interfaces
  - Ethernet MACs and Switch Can Operate Independent of Other Functions
  - IEEE 1588v2 Precision Time Protocol (PTP)
- Up to Two CAN Ports
  - Supports CAN Version 2 Parts A and B
- Up to Two Multichannel Audio Serial Ports (McASPs)
  - Transmit and Receive Clocks up to 50 MHz
  - Up to Four Serial Data Pins Per McASP Port With Independent TX and RX Clocks
  - Supports Time Division Multiplexing (TDM), Inter-IC Sound (I2S), and Similar Formats
  - Supports Digital Audio Interface Transmission (SPDIF, IEC60958-1, and AES-3 Formats)
  - FIFO Buffers for Transmit and Receive (256 Bytes)
- Up to Six UARTs
  - All UARTs Support IrDA and CIR Modes
  - All UARTs Support RTS and CTS Flow Control
  - UART1 Supports Full Modem Control
- Up to Five Master and Slave McSPIs
  - McSPI0–McSPI2 Support up to Four Chip Selects

Copyright © 2014–2019, Texas Instruments Incorporated

  - McSPI3 and McSPI4 Support up to Two Chip Selects
  - Up to 48 MHz
- One Quad-SPI
  - Supports eXecute In Place (XIP) from Serial NOR FLASH
- One Dallas 1-Wire® and HDQ Serial Interface
- Up to Three MMC, SD, and SDIO Ports
  - 1-, 4-, and 8-Bit MMC, SD, and SDIO Modes
  - 1.8- or 3.3-V Operation on All Ports
  - Up to 48-MHz Clock
  - Supports Card Detect and Write Protect
  - Complies With MMC4.3 and SD and SDIO 2.0 Specifications
- Up to Three I^2C Master and Slave Interfaces
  - Standard Mode (up to 100 kHz)
  - Fast Mode (up to 400 kHz)
- Up to Six Banks of General-Purpose I/O (GPIO)
  - 32 GPIOs per Bank (Multiplexed With Other Functional Pins)
  - GPIOs Can be Used as Interrupt Inputs (up to Two Interrupt Inputs per Bank)
- Up to Three External DMA Event Inputs That Can Also be Used as Interrupt Inputs
- Twelve 32-Bit General-Purpose Timers
  - DMTIMER1 is a 1-ms Timer Used for Operating System (OS) Ticks
  - DMTIMER4–DMTIMER7 are Pinned Out
- One Public Watchdog Timer
- One Free-Running, High-Resolution 32-kHz Counter (synctimer32K)
- One Secure Watchdog Timer (Avaliable Only on AM437xHS Devices)
- SGX530 3D Graphics Engine
  - Tile-Based Architecture Delivering up to 20M Poly/sec
  - Universal Scalable Shader Engine is a Multithreaded Engine Incorporating Pixel and Vertex Shader Functionality
  - Advanced Shader Feature Set in Excess of Microsoft VS3.0, PS3.0, and OGL2.0
  - Industry Standard API Support of Direct3D Mobile, OGL-ES 1.1 and 2.0
  - Fine-Grained Task Switching, Load Balancing, and Power Management
  - Advanced Geometry DMA-Driven Operation for Minimum CPU Interaction
  - Programmable High-Quality Image Anti-Aliasing
  - Fully Virtualized Memory Addressing for OS Operation in a Unified Memory Architecture
- Display Subsystem
  - Display Modes
    - Programmable Pixel Memory Formats (Palletized: 1-, 2-, 4-, and 8-Bits Per Pixel; RGB 16- and 24-Bits Per Pixel; and YUV 4:2:2)
  - 256- × 24-Bit Entries Palette in RGB
  - Up to 2048 × 2048 Resolution
  - Display Support
    - Four Types of Displays Are Supported: Passive and Active Colors; Passive and Active Monochromes
    - 4- and 8-Bit Monochrome Passive Panel Interface Support (15 Grayscale Levels Supported Using Dithering Block)
    - RGB 8-Bit Color Passive Panel Interface Support (3,375 Colors Supported for Color Panel Using Dithering Block)
    - RGB 12-, 16-, 18-, and 24-Bit Active Panel Interface Support (Replicated or Dithered Encoded Pixel Values)
    - Remote Frame Buffer (Embedded in the LCD Panel) Support Through the RFBI Module
    - Partial Refresh of the Remote Frame Buffer Through the RFBI Module
    - Partial Display
    - Multiple Cycles Output Format on 8-, 9-, 12-, and 16-Bit Interface (TDM)
  - Signal Processing
    - Overlay and Windowing Support for One Graphics Layer (RGB or CLUT) and Two Video Layers (YUV 4:2:2, RGB16, and RGB24)
    - RGB 24-Bit Support on the Display Interface, Optionally Dithered to RGB 18-Bit Pixel Output Plus 6-Bit Frame Rate Control (Spatial and Temporal)
    - Transparency Color Key (Source and Destination)
    - Synchronized Buffer Update
    - Gamma Curve Support
    - Multiple-Buffer Support
    - Cropping Support
    - Color Phase Rotation
- Two 12-Bit SAR ADCs (ADC0, ADC1)
  - 867K Samples Per Second
  - Input Can Be Selected from Any of the Eight Analog Inputs Multiplexed Through an 8:1 Analog Switch
  - ADC0 Can Be Configured to Operate as a 4-, 5-, or 8-Wire Resistive Touch Screen Controller (TSC)
- Up to Three 32-Bit eCAP Modules
  - Configurable as Three Capture Inputs or Three Auxiliary PWM Outputs
- Up to Six Enhanced eHRPWM Modules
  - Dedicated 16-Bit Time-Base Counter With

Copyright © 2014–2019, Texas Instruments Incorporated

  - Time and Frequency Controls
  - Configurable as Six Single-Ended, Six Dual-Edge Symmetric, or Three Dual-Edge Asymmetric Outputs
  - Up to Three 32-Bit eQEP Modules
- Device Identification
  - Factory Programmable Electrical Fuse Farm (FuseFarm)
    - Production ID
    - Device Part Number (Unique JTAG ID)
    - Device Revision (Readable by Host ARM)
    - Security Keys (Avaliable Only on AM437xHS Devices)
    - Feature Identification
- Debug Interface Support
  - JTAG and cJTAG for ARM (Cortex-A9 and PRCM) and PRU-ICSS Debug
  - Supports Real-Time Trace Pins (for Cortex-A9)
  - 64-KB Embedded Trace Buffer (ETB)
  - Supports Device Boundary Scan
  - Supports IEEE 1500
- DMA
  - On-Chip Enhanced DMA Controller (EDMA) Has Three Third-Party Transfer Controllers (TPTCs) and One Third-Party Channel Controller (TPCC), Which Supports up to 64 Programmable Logical Channels and Eight QDMA Channels
  - EDMA is Used for:
    - Transfers to and from On-Chip Memories
    - Transfers to and from External Storage (EMIF, GPMC, and Slave Peripherals)
- InterProcessor Communication (IPC)
  - Integrates Hardware-Based Mailbox for IPC and Spinlock for Process Synchronization Between the Cortex-A9, PRCM, and PRU-ICSS
- Boot Modes
  - Boot Mode is Selected Through Boot Configuration Pins Latched on the Rising Edge of the PWRONRSTn Reset Input Pin
- Camera
  - Dual Port 8- and 10-Bit BT656 Interface
  - Dual Port 8- and 10-Bit Including External Syncs
  - Single Port 12-Bit
  - YUV422/RGB422 and BT656 Input Format
  - RAW Format
  - Pixel Clock Rate up to 75 MHz
- Package
  - 491-Pin BGA Package (17-mm × 17-mm) (ZDN Suffix), 0.65-mm Ball Pitch With Via Channel Array Technology to Enable Low-Cost Routing

1.2 Applications

- Patient Monitoring
- Navigation Equipment
- Industrial Automation
- Portable Data Terminals
- Bar Code Scanners
- Point of Service
- Portable Mobile Radios
- Test and Measurement

Copyright © 2014–2019, Texas Instruments Incorporated

1.3 Description

The TI AM437x high-performance processors are based on the ARM Cortex-A9 core.

The processors are enhanced with 3D graphics acceleration for rich graphical user interfaces, as well as a coprocessor for deterministic, real-time processing including industrial communication protocols, such as EtherCAT, PROFIBUS, EnDat, and others. The devices support high-level operating systems (HLOS). Linux® is available free of charge from TI. Other HLOSs are available from TI's Design Network and ecosystem partners.

These devices offer an upgrade to systems based on lower performance ARM cores and provide updated peripherals, including memory options such as QSPI-NOR and LPDDR2.

The processors contain the subsystems shown in the Functional Block Diagram, and a brief description of each follows.

The processor subsystem is based on the ARM Cortex-A9 core, and the PowerVR SGX™ graphics accelerator subsystem provides 3D graphics acceleration to support display and advanced user interfaces.

The programmable real-time unit subsystem and industrial communication subsystem (PRU-ICSS) is separate from the ARM core and allows independent operation and clocking for greater efficiency and flexibility. The PRU-ICSS enables additional peripheral interfaces and real-time protocols such as EtherCAT, PROFINET, EtherNet/IP, PROFIBUS, Ethernet Powerlink, Sercos, EnDat, and others. The PRU-ICSS enables EnDat and another industrial communication protocol in parallel. Additionally, the programmable nature of the PRU-ICSS, along with their access to pins, events and all system-on-chip (SoC) resources, provides flexibility in implementing fast real-time responses, specialized data handling operations, custom peripheral interfaces, and in off-loading tasks from the other processor cores of the SoC.

High-performance interconnects provide high-bandwidth data transfers for multiple initiators to the internal and external memory controllers and to on-chip peripherals. The device also offers a comprehensive clock-management scheme.

One on-chip analog to digital converter (ADC0) can couple with the display subsystem to provide an integrated touch-screen solution. The other ADC (ADC1) can combine with the pulse width module to create a closed-loop motor control solution.

The RTC provides a clock reference on a separate power domain. The clock reference enables a battery-backed clock reference.

The camera interface offers configuration for a single- or dual-camera parallel port.

Cryptographic acceleration is available in all devices. All other supported security features, including support for Secure boot, debug security and support for Trusted execution environment is available on HS (High-Security) devices. For more information about HS devices, contact your TI sales representative.

Device Information(1)

PART NUMBER	PACKAGE	BODY SIZE
AM4372ZDN	NFBGA (491)	17.0 mm × 17.0 mm
AM4376ZDN	NFBGA (491)	17.0 mm × 17.0 mm
AM4377ZDN	NFBGA (491)	17.0 mm × 17.0 mm
AM4378ZDN	NFBGA (491)	17.0 mm × 17.0 mm
AM4379ZDN	NFBGA (491)	17.0 mm × 17.0 mm

(1) For more information, see Section 7, *Mechanical, Packaging, and Orderable Information*.

1.4 Functional Block Diagram

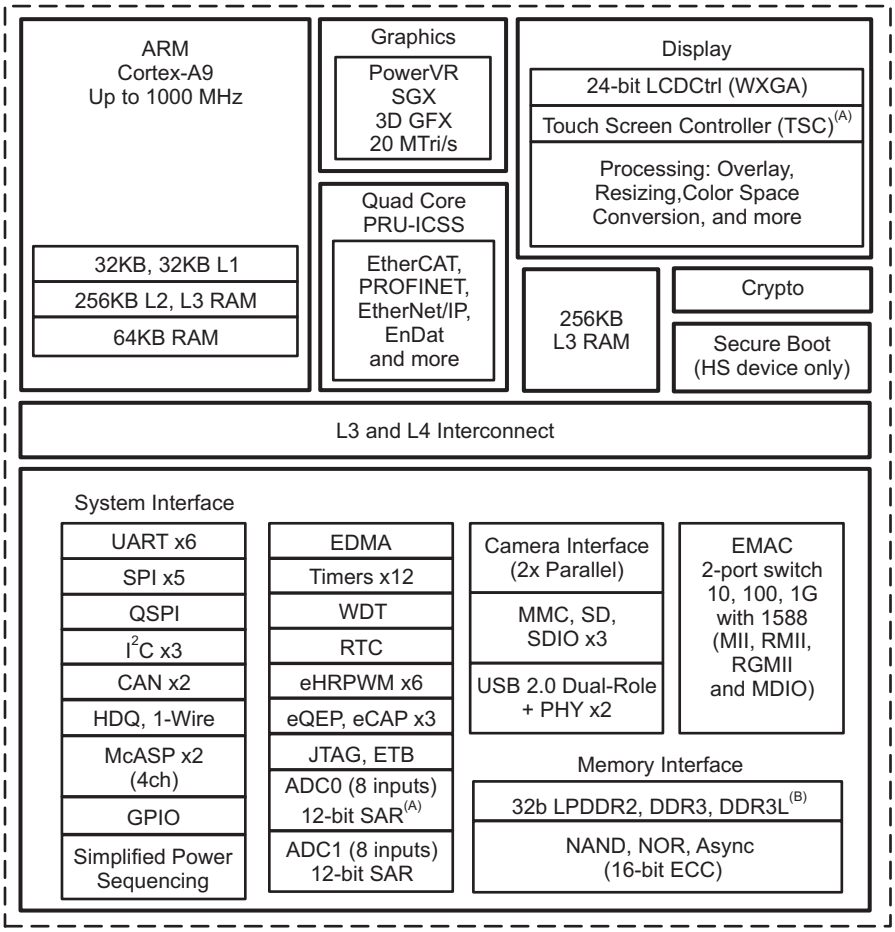

Copyright © 2016, Texas Instruments Incorporated

A. Use of TSC limits available ADC0 inputs.
B. Maximum clock: LPDDR2 = 266 MHz; DDR3/DDR3L = 400 MHz.

Figure 1-1. Functional Block Diagram

Table of Contents

1 Device Overview 1
1.1 Features 1
1.2 Applications 4
1.3 Description 5
1.4 Functional Block Diagram 6
2 Revision History 8
3 Device Comparison 9
3.1 Related Products 10
4 Terminal Configuration and Functions 11
4.1 Pin Diagrams 11
4.2 Pin Attributes 21
4.3 Signal Descriptions 65
5 Specifications 103
5.1 Absolute Maximum Ratings 103
5.2 ESD Ratings 105
5.3 Power-On Hours (POH) 105
5.4 Operating Performance Points 106
5.5 Recommended Operating Conditions 107
5.6 Power Consumption Summary 109
5.7 DC Electrical Characteristics 110
5.8 ADC0: Touch Screen Controller and Analog-to-Digital Subsystem Electrical Parameters 113
5.9 VPP Specifications for One-Time Programmable (OTP) eFuses 115
5.10 Thermal Resistance Characteristics 116
5.11 External Capacitors 117
5.12 Timing and Switching Characteristics 120
5.13 Emulation and Debug 250
6 Device and Documentation Support 251
6.1 Device Nomenclature 251
6.2 Tools and Software 252
6.3 Documentation Support 254
6.4 Related Links 256
6.5 Community Resources 256
6.6 Trademarks 256
6.7 Electrostatic Discharge Caution 256
6.8 Glossary 256
7 Mechanical, Packaging, and Orderable Information 257
7.1 Via Channel 257
7.2 Packaging Information 257

2 Revision History

NOTE: Page numbers for previous revisions may differ from page numbers in the current version.

Changes from August 15, 2016 to January 15, 2019 (from D Revision (August 2016) to E Revision)	Page
• Removed OpenVG 1.0	3
• Updated/Changed Description text	5
• Changed DEV_FEATURE register value for all devices in Table 3-1, Device Features Comparison	9
• Switched table notes 1 and 2 in *Power-Supply Decoupling Capacitor Characteristics*	117
• Updated footnotes in Power-Supply Decoupling Capacitor Characteristics	118
• Removed Rise time, Fall time, and Transition time in all Switching Characteristics	120
• Updated PRU-ICSS MDIO Switching Characteristics - MDIO_DATA max value from "390" to "(P*0.5)-10"	140
• Removed NO. 2 and 3 from Switching Characteristics for RMII[x]_TXD[1:0], and RMII[x]_TXEN - RMII Mode	144
• Removed DDR_CKE0 and CKE info from 16-Bit DDR3 Interface Using One 16-Bit DDR3 Device With V_{TT} Termination	172
• Deleted FAST MODE MIN timings on SDA and SCL rise and fall times in Table 5-83, Timing Requirements for I2C Input Timings	215
• Updated QSPI Read Active High Polarity	228
• Added new Note to PRU-ICSS MII_RT Electrical Data and Timing	240
• Updated 10 Mbps MAX from "25 ns" to "27 ns"	242
• Updated all values in Switching Characteristics for MMC[x]_CMD and MMC[x]_DAT[7:0]—HSPE=0	245

Copyright © 2014–2019, Texas Instruments Incorporated

3 Device Comparison

Table 3-1 shows the features supported across different AM437x devices.

Table 3-1. Device Features Comparison

FUNCTION	AM4372	AM4376	AM4377	AM4378	AM4379
ARM Cortex-A9	Yes	Yes	Yes	Yes	Yes
Frequency	600 MHz 800 MHz	300 MHz 800 MHz 1000 MHz	800 MHz 1000 MHz	800 MHz 1000 MHz	800 MHz 1000 MHz
MIPS	1500 2000	750 2000 2500	2000 2500	2000 2500	2000 2500
On-chip L1 cache	64KB	64KB	64KB	64KB	64KB
On-chip L2 cache	256KB	256KB	256KB	256KB	256KB
Graphics accelerator (SGX530)	—	—	—	3D	3D
Hardware acceleration	Crypto accelerator	Crypto accelerator	Crypto accelerator	Crypto accelerator	Crypto accelerator
Programmable real-time unit subsystem and industrial communication subsystem (PRU-ICSS)	—	Features including basic Industrial protocols	Features including all Industrial protocols	Features including basic Industrial protocols	Features including all Industrial protocols
On-chip memory	256KB	256KB	256KB	256KB	256KB
Display options	DSS	DSS	DSS	DSS	DSS
General-purpose memory	1 16-bit (GPMC, NAND flash, NOR flash, SRAM)	1 16-bit (GPMC, NAND flash, NOR flash, SRAM)	1 16-bit (GPMC, NAND flash, NOR flash, SRAM)	1 16-bit (GPMC, NAND flash, NOR flash, SRAM)	1 16-bit (GPMC, NAND flash, NOR flash, SRAM)
DRAM[(1)]	1 32-bit (DDR3-800, DDR3L-800, LPDDR2-532)	1 32-bit (DDR3-800, DDR3L-800, LPDDR2-532)	1 32-bit (DDR3-800, DDR3L-800, LPDDR2-532)	1 32-bit (DDR3-800, DDR3L-800, LPDDR2-532)	1 32-bit (DDR3-800, DDR3L-800, LPDDR2-532)
Universal serial bus (USB)	2 ports	2 ports	2 ports	2 ports	2 ports
Ethernet media access controller (EMAC) with 2-port switch	10/100/1000 2 ports	10/100/1000 2 ports	10/100/1000 2 ports	10/100/1000 2 ports	10/100/1000 2 ports
Multimedia card (MMC)	3	3	3	3	3
Controller-area network (CAN)	2	2	2	2	2
Universal asynchronous receiver and transmitter (UART)	6	6	6	6	6
Analog-to-digital converter (ADC)	2 8-ch 12-bit	2 8-ch 12-bit	2 8-ch 12-bit	2 8-ch 12-bit	2 8-ch 12-bit
Enhanced high-resolution PWM modules (eHRPWM)	6	6	6	6	6
Enhanced capture modules (eCAP)	3	3	3	3	3
Enhanced quadrature encoder pulse (eQEP)	3	3	3	3	3
Real-time clock (RTC)	1	1	1	1	1
Inter-integrated circuit (I^2C)	3	3	3	3	3
Multichannel audio serial port (McASP)	2	2	2	2	2
Multichannel serial port interface (McSPI)	5	5	5	5	5
Enhanced direct memory access (EDMA)	64-Ch	64-Ch	64-Ch	64-Ch	64-Ch
Camera (VPFE)	12-bit	12-bit	12-bit	12-bit	12-bit
Sync timer (32K)	1	1	1	1	1
HDQ/1-Wire	1	1	1	1	1
QSPI	1	1	1	1	1

Copyright © 2014–2019, Texas Instruments Incorporated

Table 3-1. Device Features Comparison (continued)

FUNCTION	AM4372	AM4376	AM4377	AM4378	AM4379
Timers	12	12	12	12	12
DEV_FEATURE register value(2)	0x02FC20FE	0x02FD20FF	0x02FF20FF	0x22FD20FF	0x22FF20FF
Input/output (I/O) supply	1.8 V, 3.3 V	1.8 V, 3.3 V	1.8 V, 3.3 V	1.8 V, 3.3 V	1.8 V, 3.3 V
Operating temperature range	0 to 90°C –40 to 105°C	0 to 90°C –40 to 105°C –40 to 90°C	–40 to 105°C –40 to 90°C	0 to 90°C –40 to 105°C –40 to 90°C	–40 to 105°C

(1) DRAM speeds listed are data rates.

(2) For more details about the DEV_FEATURE register, see the *AM437x Sitara Processors Technical Reference Manual*.

3.1 Related Products

For information about other devices in this family of products or related products, see the following links:

Sitara Processors Scalable processors based on ARM Cortex-A cores with flexible peripherals, connectivity and unified software support – perfect for sensors to servers.

Sitara AM437x Processors Scalable ARM Cortex-A9 from 300 MHz up to 1 GHz. 3D graphics option for enhanced user interface. Quad core PRU-ICSS for industrial Ethernet protocols and position feedback control. Dual camera support for barcode scanning, preview and still pictures. Customer programmable secure boot option.

Companion Products for AM437x Devices Review products that are frequently used in conjunction with this product.

Reference Designs for AM437x Devices TI Designs Reference Design Library is a robust reference design library spanning analog, embedded processor and connectivity. Created by TI experts to help you jump start your system design, all TI Designs include schematic or block diagrams, BOMs and design files to speed your time to market. Search and download designs at ti.com/tidesigns.

Copyright © 2014–2019, Texas Instruments Incorporated

4 Terminal Configuration and Functions

4.1 Pin Diagrams

NOTE

The terms "ball", "pin", and "terminal" are used interchangeably throughout the document. An attempt is made to use "ball" only when referring to the physical package.

Table 4-1. ZDN Ball Map [Section Top Left - Top View]

	A	B	C	D	E	F	G	H
25	VSS	XTALOUT	XTALIN	gpio5_8	gpio5_12	USB1_DRVVBUS	EXTINTn	uart3_rxd
24	dss_ac_bias_en	VSS_OSC	xdma_event_intr1	xdma_event_intr0	gpio5_13	gpio5_9	eCAP0_in_PWM0_out	uart3_txd
23	dss_hsync	dss_vsync	VDDS_OSC		VDDS_CLKOUT	gpio5_11		mcasp0_axr0
22	dss_pclk	dss_data0				VDDSHV5	WARMRSTn	uart3_ctsn
21	dss_data1	dss_data2	dss_data3				USB0_DRVVBUS	Reserved
20	dss_data4	dss_data5	dss_data6	vdd_mpu_mon		VDDS	gpio5_10	clkreq
19	dss_data8	dss_data9	dss_data12	dss_data13	dss_data7	CAP_VBB_MPU		Reserved
18	dss_data10	dss_data11						VSS

Ball Map Position

1	2	3
4	5	6
7	8	9

Copyright © 2014–2019, Texas Instruments Incorporated

Table 4-2. ZDN Ball Map [Section Top Middle - Top View]

	J	K	L	M	N	P	R	T
25	uart0_rtsn	uart0_rxd	uart0_ctsn	mcasp0_axr1	spi4_cs0	spi4_sclk	spi0_cs1	USB1_VBUS
24	uart0_txd	uart3_rtsn	mcasp0_ahclkx	mcasp0_ahclkr	mcasp0_aclkx	spi4_d1	spi4_d0	EMU1
23		mcasp0_fsr	mcasp0_aclkr		EMU0	spi0_sclk		spi2_cs0
22		uart1_ctsn	uart1_rtsn		mcasp0_fsx	spi2_d0		spi0_d0
21		uart1_rxd	uart1_txd		VDDS_PLL_CORE_LCD	VPP		spi0_d1
20		VDD_MPU	VDD_MPU		spi2_sclk	spi2_d1		spi0_cs0
19		VDD_MPU	VDD_MPU		VDDSHV3	VDDS		VDD_CORE
18	VDDSHV3	VDDSHV3	VSS	VDD_MPU	VDDSHV3	VDDSHV3	VSS	VDD_CORE

Ball Map Position

1	2	3
4	5	6
7	8	9

Table 4-3. ZDN Ball Map [Section Top Right - Top View]

	U	V	W	Y	AA	AB	AC	AD	AE
25	USB1_ID	USB1_DM	USB0_DP	nTRST	TCK	cam1_wen	cam1_field	cam1_hd	VSS
24	USB0_ID	USB1_DP	USB0_DM	TMS	TDO	I2C0_SDA	cam1_data9	cam1_data8	cam1_data7
23	USB0_VBUS		VSSA_USB	PWRONRSTn	VSS		cam1_vd	cam1_data6	cam1_data5
22	USB1_CE		USB0_CE	I2C0_SCL				cam1_data4	cam1_data3
21	VDDA1P8V_USB1		VDDA1P8V_USB0				cam1_data1	cam1_data2	cam1_pclk
20	VDDA3P3V_USB1		VDDA3P3V_USB0	TDI		cam1_data0	cam0_pclk	cam0_data7	cam0_data6
19	VSS			VDDS	cam0_data9	cam0_data8		cam0_data5	cam0_data4
18	VSS	VSS	VDDSHV3	cam0_data2	cam0_data3	cam0_data1	cam0_field	cam0_vd	cam0_data0

Ball Map Position

1	2	3
4	5	6
7	8	9

Copyright © 2014–2019, Texas Instruments Incorporated

Table 4-4. ZDN Ball Map [Section Middle Left - Top View]

	A	B	C	D	E	F	G	H
17	mdio_data	mdio_clk	dss_data14	dss_data15	VDDS_PLL_MPU	mii1_rxd0	VDDSHV6	VDDSHV6
16	rmii1_ref_clk	mii1_rxd1	mii1_txd3	mii1_col	mii1_rxd2	VDDSHV7	VDDSHV6	VDD_MPU
15	mii1_rx_dv	mii1_txd0						VSS
14	mii1_txd1	mii1_crs	mii1_rxd3	mii1_tx_clk	CAP_VDD_SRAM_MPU	VDDS_SRAM_MPU_BB	VDDSHV8	VDD_MPU
13	mii1_tx_en	mii1_rx_er	mii1_txd2	mii1_rx_clk	CAP_VDD_SRAM_CORE	VDDS_SRAM_CORE_BG	VDDSHV8	VDD_MPU
12	gpmc_clk	gpmc_csn3						VDDS
11	gpmc_ad15	gpmc_ad14	gpmc_ad13	gpmc_ad11	gpmc_ad12	gpmc_ad10	VDDSHV9	VDDSHV9
10	gpmc_ad9	gpmc_ad8	gpmc_be0n_cle	gpmc_wen	gpmc_oen_ren	gpmc_csn2	VDDSHV10	VDDSHV10

Ball Map Position

1	2	3
4	5	6
7	8	9

Table 4-5. ZDN Ball Map [Section Middle Middle - Top View]

	J	K	L	M	N	P	R	T
17	VSS	VDDSHV3	VSS	VDD_MPU	VDD_CORE	VDD_CORE	VSS	VSS
16	VDD_MPU			VSS	VDD_CORE	VDD_CORE		
15	VSS	VSS	VSS	VSS	VSS	VSS	VSS	VSS
14	VDD_MPU	VSS	VDD_CORE	VDD_CORE	VSS	VSS	VDD_CORE	VDD_CORE
13	VDD_MPU			VSS	VSS	VSS		
12	VSS	VSS	VDD_CORE	VDD_CORE	VSS	VSS	VSS	VSS
11	VDD_CORE	VSS	VSS	VSS	VSS	VSS	VDD_CORE	VDD_CORE
10	VDD_CORE			VSS	VSS	VSS		

Ball Map Position

1	2	3
4	5	6
7	8	9

Copyright © 2014–2019, Texas Instruments Incorporated

Table 4-6. ZDN Ball Map [Section Middle Right - Top View]

	U	V	W	Y	AA	AB	AC	AD	AE
17	VSS	VDDSHV2						cam0_wen	cam0_hd
16	VSS	VDDSHV2	VDDSHV2	VDDA_ADC1	ADC1_AIN2	ADC1_AIN1	ADC1_AIN0	ADC1_AIN7	ADC1_AIN6
15	VDD_CORE	VDD_CORE	VDDS	ADC1_AIN5	ADC1_AIN4	ADC1_AIN3	VSSA_ADC	ADC1_VREFN	ADC1_VREFP
14	VSS	VSS						ADC0_VREFP	ADC0_VREFN
13	VSS	VSS	VDD_CORE	ADC0_AIN2	ADC0_AIN3	ADC0_AIN4	ADC0_AIN5	ADC0_AIN6	ADC0_AIN7
12	VSS	VSS	VDD_CORE	ADC0_AIN1	ADC0_AIN0	VDDA_ADC0	Reserved	VDDS	Reserved
11	VSS	VSS						Reserved	Reserved
10	VSS	VSS	Reserved	Reserved	Reserved	Reserved	Reserved	Reserved	VSS

Ball Map Position

1	2	3
4	5	6
7	8	9

Table 4-7. ZDN Ball Map [Section Bottom Left - Top View]

	A	B	C	D	E	F	G	H
9	gpmc_advn_ale	gpmc_csn1						VDDSHV11
8	gpmc_csn0	gpmc_ad7	gpmc_ad6	gpmc_a11	gpmc_a6	VDDS3P3V_IOLDO	gpmc_a10	VDDSHV11
7	gpmc_ad5	gpmc_ad4		gpmc_a4	gpmc_a5	gpmc_a8		
6	gpmc_ad3	gpmc_ad2	gpmc_a2	CAP_VDDS1P8V_IOLDO		gpmc_a7	VDDS	
5	gpmc_ad1	gpmc_ad0	gpmc_a1				VDDS_PLL_DDR	
4	gpmc_a3	gpmc_a9				ddr_dqm0	ddr_d4	
3	gpmc_be1n	gpmc_wpn	gpmc_a0		ddr_d0	ddr_d3	ddr_d5	
2	gpmc_wait0	mmc0_dat2	mmc0_dat1	mmc0_cmd	ddr_d1	ddr_dqs0	ddr_d6	ddr_dqm1
1	VSS	mmc0_dat3	mmc0_dat0	mmc0_clk	ddr_d2	ddr_dqsn0	ddr_d7	ddr_d8

Ball Map Position

1	2	3
4	5	6
7	8	9

Copyright © 2014–2019, Texas Instruments Incorporated

Table 4-8. ZDN Ball Map [Section Bottom Middle - Top View]

	J	K	L	M	N	P	R	T
9	VSS	VSS	VSS	VDD_CORE	VDD_CORE	VSS	VDD_CORE	VDD_CORE
8	VDDSHV1	VDDS_DDR	VSS	VDDS_DDR	VDDS_DDR	VSS	VDDS_DDR	VDDS_DDR
7	VDDSHV1	VDDS_DDR		VDDS_DDR	VDDS_DDR		VDDS_DDR	VDDS_DDR
6	ddr_d9	ddr_d13		ddr_a10	ddr_cke1		VDDS_DDR	ddr_vref
5	ddr_d10	ddr_d14		ddr_csn0	ddr_a13		ddr_a5	ddr_a11
4	ddr_d11	ddr_d15		ddr_csn1	ddr_wen		ddr_a6	ddr_a12
3	ddr_d12	ddr_ba2		ddr_cke0	ddr_casn		ddr_a7	ddr_a14
2	ddr_dqs1	ddr_ba1	ddr_a2	ddr_ck	ddr_rasn	ddr_a3	ddr_a8	ddr_a15
1	ddr_dqsn1	ddr_ba0	ddr_a1	ddr_nck	ddr_a0	ddr_a4	ddr_a9	ddr_resetn

Ball Map Position

1	2	3
4	5	6
7	8	9

Table 4-9. ZDN Ball Map [Section Bottom Right - Top View]

	U	V	W	Y	AA	AB	AC	AD	AE
9	VSS	VSS			Reserved	Reserved	Reserved	VDD_CORE	Reserved
8	VSS	VDDS_DDR						VDDS	VSS
7		VDDS_DDR		Reserved	Reserved	Reserved	Reserved	Reserved	VSS
6		ddr_dqm2	ddr_d23	Reserved		Reserved	Reserved	RTC_PMIC_EN	RTC_PWRONRSTn
5		ddr_d16	ddr_d22				Reserved	VDDS_RTC	RTC_XTALIN
4		ddr_d17	ddr_d21	ddr_d26				VSS_RTC	RTC_XTALOUT
3		ddr_d18		ddr_d25	ddr_d27		ddr_vtp	CAP_VDD_RTC	RTC_WAKEUP
2	ddr_odt1	ddr_d19	ddr_dqsn2	ddr_d24	ddr_dqsn3	ddr_d28	ddr_d31	Reserved	RTC_KALDO_ENn
1	ddr_odt0	ddr_d20	ddr_dqs2	ddr_dqm3	ddr_dqs3	ddr_d29	ddr_d30	Reserved	VSS

Ball Map Position

1	2	3
4	5	6
7	8	9

Copyright © 2014–2019, Texas Instruments Incorporated

4.2 Pin Attributes

1. **BALL NUMBER:** Package ball numbers associated with each signals.
2. **PIN NAME:** The name of the package pin.
   Note: The table does not take into account subsystem terminal multiplexing options.
3. **SIGNAL NAME**: The signal name for that pin in the mode being used.
4. **MODE:** Multiplexing mode number.
   a. Mode 0 is the primary mode; this means that when mode 0 is set, the function mapped on the terminal corresponds to the name of the terminal. There is always a function mapped on the primary mode. Notice that primary mode is not necessarily the default mode.

      Note: The default mode is the mode at the release of the reset; also see the RESET REL. MODE column.

   b. Modes 1 to 7 are possible modes for alternate functions. On each terminal, some modes are effectively used for alternate functions, while some modes are not used and do not correspond to a functional configuration.
5. **TYPE:** Signal direction
   – I = Input
   – O = Output
   – IO = Input and Output
   – D = Open drain
   – DS = Differential
   – A = Analog
   – PWR = Power
   – GND = Ground

   Note: In the safe_mode, the buffer is configured in high-impedance.
6. **BALL RESET STATE:** State of the terminal while the active low PWRONRSTn terminal is low.
   – 0: The buffer drives V_{OL} (pulldown or pullup resistor not activated)
     0(PD): The buffer drives V_{OL} with an active pulldown resistor
   – 1: The buffer drives V_{OH} (pulldown or pullup resistor not activated)
     1(PU): The buffer drives V_{OH} with an active pullup resistor
   – Z or OFF: High-impedance
   – L: High-impedance with an active pulldown resistor
   – H : High-impedance with an active pullup resistor
7. **BALL RESET REL. STATE:** State of the terminal after the active low PWRONRSTn terminal transitions from low to high.
   – 0: The buffer drives V_{OL} (pulldown or pullup resistor not activated)
     0(PD): The buffer drives V_{OL} with an active pulldown resistor
   – 1: The buffer drives V_{OH} (pulldown or pullup resistor not activated)
     1(PU): The buffer drives V_{OH} with an active pullup resistor
   – Z or OFF: High-impedance.
   – L: High-impedance with an active pulldown resistor
   – H : High-impedance with an active pullup resistor
8. **RESET REL. MODE:** The mode is automatically configured after the active low PWRONRSTn terminal transitions from low to high.
9. **POWER:** The voltage supply that powers the terminal's IO buffers.
10. **HYS:** Indicates if the input buffer is with hysteresis.
11. **BUFFER STRENGTH:** Drive strength of the associated output buffer.
12. **PULLUP OR PULLDOWN TYPE:** Denotes the presence of an internal pullup or pulldown resistor. Pullup and pulldown resistors can be enabled or disabled via software.
13. **IO CELL:** IO cell information.

Note: Configuring two terminals to the same input signal is not supported as it can yield unexpected results. This can be easily prevented with the proper software configuration.

Copyright © 2014–2019, Texas Instruments Incorporated

Table 4-10. Pin Attributes (ZDN Package)

BALL NUMBER [1]	PIN NAME [2]	SIGNAL NAME [3]	MODE [4]	TYPE [5]	BALL RESET STATE [6]	BALL RESET REL. STATE [7]	BALL RESET REL. MODE [8]	POWER [9]	HYS [10]	BUFFER STRENGTH (mA) [11]	PULL UP/DOWN TYPE [12]	IO CELL [13]
AE14	ADC0_VREFN	ADC0_VREFN	0x0	AP	Z	Z	Mode0	VDDA_ADC0	NA	NA	NA	Analog
AD14	ADC0_VREFP	ADC0_VREFP	0x0	AP	Z	Z	Mode0	VDDA_ADC0	NA	NA	NA	Analog
AD15	ADC1_VREFN	ADC1_VREFN	0x0	AP	Z	Z	Mode0	VDDA_ADC1	NA	NA	NA	Analog
AE15	ADC1_VREFP	ADC1_VREFP	0x0	AP	Z	Z	Mode0	VDDA_ADC1	NA	NA	NA	Analog
AA12	ADC0_AIN0	ADC0_AIN0	0x0	A	Z	Z	Mode0	VDDA_ADC0	NA	25	NA	Analog
Y12	ADC0_AIN1	ADC0_AIN1	0x0	A	Z	Z	Mode0	VDDA_ADC0	NA	25	NA	Analog
Y13	ADC0_AIN2	ADC0_AIN2	0x0	A	Z	Z	Mode0	VDDA_ADC0	NA	25	NA	Analog
AA13	ADC0_AIN3	ADC0_AIN3	0x0	A	Z	Z	Mode0	VDDA_ADC0	NA	25	NA	Analog
AB13	ADC0_AIN4	ADC0_AIN4	0x0	A	Z	Z	Mode0	VDDA_ADC0	NA	25	NA	Analog
AC13	ADC0_AIN5	ADC0_AIN5	0x0	A	Z	Z	Mode0	VDDA_ADC0	NA	25	NA	Analog
AD13	ADC0_AIN6	ADC0_AIN6	0x0	A	Z	Z	Mode0	VDDA_ADC0	NA	25	NA	Analog
AE13	ADC0_AIN7	ADC0_AIN7	0x0	A	Z	Z	Mode0	VDDA_ADC0	NA	25	NA	Analog
AC16	ADC1_AIN0	ADC1_AIN0	0x0	A	Z	Z	Mode0	VDDA_ADC1	NA	25	NA	Analog
AB16	ADC1_AIN1	ADC1_AIN1	0x0	A	Z	Z	Mode0	VDDA_ADC1	NA	25	NA	Analog
AA16	ADC1_AIN2	ADC1_AIN2	0x0	A	Z	Z	Mode0	VDDA_ADC1	NA	25	NA	Analog
AB15	ADC1_AIN3	ADC1_AIN3	0x0	A	Z	Z	Mode0	VDDA_ADC1	NA	25	NA	Analog
AA15	ADC1_AIN4	ADC1_AIN4	0x0	A	Z	Z	Mode0	VDDA_ADC1	NA	25	NA	Analog
Y15	ADC1_AIN5	ADC1_AIN5	0x0	A	Z	Z	Mode0	VDDA_ADC1	NA	25	NA	Analog
AE16	ADC1_AIN6	ADC1_AIN6	0x0	A	Z	Z	Mode0	VDDA_ADC1	NA	25	NA	Analog
AD16	ADC1_AIN7	ADC1_AIN7	0x0	A	Z	Z	Mode0	VDDA_ADC1	NA	25	NA	Analog
AC18	cam0_field	cam0_field	0x0	IO	L	L	Mode7	VDDSHV2	Yes	6	PU/PD	LVCMOS
		dss_data21	0x2	O								
		cam0_data10	0x3	I								
		spi2_sclk	0x4	IO								
		cam1_data10	0x5	I								
		EMU4	0x6	IO								
		gpio4_2	0x7	IO								
AE17	cam0_hd	cam0_hd	0x0	IO	L	L	Mode7	VDDSHV2	Yes	6	PU/PD	LVCMOS
		dss_data23	0x2	O								
		pr1_edio_sof	0x3	O								
		spi2_cs1	0x4	IO								
		EMU10	0x5	IO								
		EMU2	0x6	IO								
		gpio4_0	0x7	IO								

Table 4-10. Pin Attributes (ZDN Package) (continued)

BALL NUMBER [1]	PIN NAME [2]	SIGNAL NAME [3]	MODE [4]	TYPE [5]	BALL RESET STATE [6]	BALL RESET REL. STATE [7]	BALL RESET REL. MODE [8]	POWER [9]	HYS [10]	BUFFER STRENGTH (mA) [11]	PULL UP/DOWN TYPE [12]	IO CELL [13]
AC20	cam0_pclk	cam0_pclk	0x0	I	L	L	Mode7	VDDSHV2	Yes	6	PU/PD	LVCMOS
		dss_data19	0x2	O								
		pr0_pru0_gpo14	0x3	O								
		spi2_cs0	0x4	IO								
		pr0_pru0_gpi14	0x5	I								
		EMU6	0x6	IO								
		gpio4_4	0x7	IO								
		I2C2_SDA	0x8	IOD								
AD18	cam0_vd	cam0_vd	0x0	IO	L	L	Mode7	VDDSHV2	Yes	6	PU/PD	LVCMOS
		dss_data22	0x2	O								
		pr1_edio_outvalid	0x3	O								
		spi2_d1	0x4	IO								
		EMU11	0x5	IO								
		EMU3	0x6	IO								
		gpio4_1	0x7	IO								
AD17	cam0_wen	cam0_wen	0x0	I	L	L	Mode7	VDDSHV2	Yes	6	PU/PD	LVCMOS
		dss_data20	0x2	O								
		cam0_data11	0x3	I								
		spi2_d0	0x4	IO								
		cam1_data11	0x5	I								
		EMU5	0x6	IO								
		gpio4_3	0x7	IO								
AC25	cam1_field	cam1_field	0x0	IO	L	L	Mode7	VDDSHV2	Yes	6	PU/PD	LVCMOS
		xdma_event_intr7	0x1	I								
		ext_hw_trigger	0x2	I								
		cam0_data10	0x3	I								
		spi2_cs1	0x4	IO								
		cam1_data10	0x5	I								
		ehrpwm1B	0x6	O								
		gpio4_12	0x7	IO								
		ehrpwm3A	0x8	O								

Copyright © 2014–2019, Texas Instruments Incorporated

Table 4-10. Pin Attributes (ZDN Package) (continued)

BALL NUMBER [1]	PIN NAME [2]	SIGNAL NAME [3]	MODE [4]	TYPE [5]	BALL RESET STATE [6]	BALL RESET REL. STATE [7]	BALL RESET REL. MODE [8]	POWER [9]	HYS [10]	BUFFER STRENGTH (mA) [11]	PULL UP/DOWN TYPE [12]	IO CELL [13]
AD25	cam1_hd	cam1_hd	0x0	IO	L	L	Mode7	VDDSHV2	Yes	6	PU/PD	LVCMOS
		xdma_event_intr4	0x1	I								
		spi0_cs3	0x2	IO								
		pr0_pru1_gpo1	0x3	O								
		spi2_cs0	0x4	IO								
		pr0_pru1_gpi1	0x5	I								
		ehrpwm0A	0x6	O								
		gpio4_9	0x7	IO								
AE21	cam1_pclk	cam1_pclk	0x0	I	L	L	Mode7	VDDSHV2	Yes	6	PU/PD	LVCMOS
		xdma_event_intr6	0x1	I								
		spi1_cs3	0x2	IO								
		pr0_pru1_gpo3	0x3	O								
		spi2_sclk	0x4	IO								
		pr0_pru1_gpi3	0x5	I								
		ehrpwm1A	0x6	O								
		gpio4_11	0x7	IO								
AC23	cam1_vd	cam1_vd	0x0	IO	L	L	Mode7	VDDSHV2	Yes	6	PU/PD	LVCMOS
		xdma_event_intr5	0x1	I								
		spi1_cs2	0x2	IO								
		pr0_pru1_gpo2	0x3	O								
		spi2_cs2	0x4	IO								
		pr0_pru1_gpi2	0x5	I								
		ehrpwm0B	0x6	O								
		gpio4_10	0x7	IO								
AB25	cam1_wen	cam1_wen	0x0	I	L	L	Mode7	VDDSHV2	Yes	6	PU/PD	LVCMOS
		xdma_event_intr8	0x1	I								
		pr1_edio_sof	0x2	O								
		cam0_data11	0x3	I								
		spi2_d1	0x4	IO								
		cam1_data11	0x5	I								
		EMU11	0x6	IO								
		gpio4_13	0x7	IO								
		ehrpwm3B	0x8	O								

Table 4-10. Pin Attributes (ZDN Package) (continued)

BALL NUMBER [1]	PIN NAME [2]	SIGNAL NAME [3]	MODE [4]	TYPE [5]	BALL RESET STATE [6]	BALL RESET REL. STATE [7]	BALL RESET REL. MODE [8]	POWER [9]	HYS [10]	BUFFER STRENGTH (mA) [11]	PULL UP/DOWN TYPE [12]	IO CELL [13]
AE18	cam0_data0	cam0_data0	0x0	I	L	L	Mode7	VDDSHV2	Yes	6	PU/PD	LVCMOS
		cam1_data9	0x2	I								
		I2C1_SDA	0x3	IOD								
		pr0_pru1_gpo16	0x4	O								
		pr0_pru1_gpi16	0x5	I								
		ehrpwm0_synco	0x6	O								
		gpio5_19	0x7	IO								
AB18	cam0_data1	cam0_data1	0x0	I	L	L	Mode7	VDDSHV2	Yes	6	PU/PD	LVCMOS
		cam1_data8	0x2	I								
		I2C1_SCL	0x3	IOD								
		pr0_pru1_gpo17	0x4	O								
		pr0_pru1_gpi17	0x5	I								
		ehrpwm3_synco	0x6	O								
		gpio5_20	0x7	IO								
Y18	cam0_data2	cam0_data2	0x0	I	L	L	Mode7	VDDSHV2	Yes	6	PU/PD	LVCMOS
		mmc1_clk	0x1	IO								
		cam1_data10	0x2	I								
		qspi_clk	0x3	IO								
		gpio4_24	0x7	IO								
AA18	cam0_data3	cam0_data3	0x0	I	L	L	Mode7	VDDSHV2	Yes	6	PU/PD	LVCMOS
		mmc1_cmd	0x1	IO								
		cam1_data11	0x2	I								
		qspi_csn	0x3	O								
		gpio4_25	0x7	IO								
AE19	cam0_data4	cam0_data4	0x0	I	L	L	Mode7	VDDSHV2	Yes	6	PU/PD	LVCMOS
		mmc1_dat0	0x1	IO								
		cam1_wen	0x2	I								
		qspi_d0	0x3	IO								
		ehrpwm3A	0x6	O								
		gpio4_26	0x7	IO								
AD19	cam0_data5	cam0_data5	0x0	I	L	L	Mode7	VDDSHV2	Yes	6	PU/PD	LVCMOS
		mmc1_dat1	0x1	IO								
		qspi_d1	0x3	I								
		ehrpwm3B	0x6	O								
		gpio4_27	0x7	IO								

Copyright © 2014–2019, Texas Instruments Incorporated

Table 4-10. Pin Attributes (ZDN Package) (continued)

BALL NUMBER [1]	PIN NAME [2]	SIGNAL NAME [3]	MODE [4]	TYPE [5]	BALL RESET STATE [6]	BALL RESET REL. STATE [7]	BALL RESET REL. MODE [8]	POWER [9]	HYS [10]	BUFFER STRENGTH (mA) [11]	PULL UP/DOWN TYPE [12]	IO CELL [13]
AE20	cam0_data6	cam0_data6	0x0	I	L	L	Mode7	VDDSHV2	Yes	6	PU/PD	LVCMOS
		mmc1_dat2	0x1	IO								
		qspi_d2	0x3	I								
		ehrpwm1A	0x6	O								
		gpio4_28	0x7	IO								
AD20	cam0_data7	cam0_data7	0x0	I	L	L	Mode7	VDDSHV2	Yes	6	PU/PD	LVCMOS
		mmc1_dat3	0x1	IO								
		qspi_d3	0x3	I								
		ehrpwm1B	0x6	O								
		gpio4_29	0x7	IO								
AB19	cam0_data8	cam0_data8	0x0	I	L	L	Mode7	VDDSHV2	Yes	6	PU/PD	LVCMOS
		dss_data18	0x2	O								
		pr0_pru0_gpo15	0x3	O								
		spi2_cs2	0x4	IO								
		pr0_pru0_gpi15	0x5	I								
		EMU7	0x6	IO								
		gpio4_5	0x7	IO								
		I2C2_SCL	0x8	IOD								
AA19	cam0_data9	cam0_data9	0x0	I	L	L	Mode7	VDDSHV2	Yes	6	PU/PD	LVCMOS
		dss_data17	0x2	O								
		pr0_pru0_gpo16	0x3	O								
		spi2_cs3	0x4	IO								
		pr0_pru0_gpi16	0x5	I								
		EMU8	0x6	IO								
		gpio4_6	0x7	IO								
AB20	cam1_data0	cam1_data0	0x0	I	L	L	Mode7	VDDSHV2	Yes	6	PU/PD	LVCMOS
		uart1_rxd	0x1	IO								
		spi3_d0	0x2	IO								
		I2C2_SDA	0x3	IOD								
		ehrpwm0_tripzone_input	0x6	I								
		gpio4_14	0x7	IO								
AC21	cam1_data1	cam1_data1	0x0	I	H	H	Mode7	VDDSHV2	Yes	6	PU/PD	LVCMOS
		uart1_txd	0x1	IO								
		spi3_d1	0x2	IO								
		I2C2_SCL	0x3	IOD								
		ehrpwm0_synci	0x6	I								
		gpio4_15	0x7	IO								

Copyright © 2014–2019, Texas Instruments Incorporated

Table 4-10. Pin Attributes (ZDN Package) (continued)

BALL NUMBER [1]	PIN NAME [2]	SIGNAL NAME [3]	MODE [4]	TYPE [5]	BALL RESET STATE [6]	BALL RESET REL. STATE [7]	BALL RESET REL. MODE [8]	POWER [9]	HYS [10]	BUFFER STRENGTH (mA) [11]	PULL UP/DOWN TYPE [12]	IO CELL [13]
AD21	cam1_data2	cam1_data2	0x0	I	L	L	Mode7	VDDSHV2	Yes	6	PU/PD	LVCMOS
		uart1_ctsn	0x1	IO								
		spi3_cs0	0x2	IO								
		mmc2_clk	0x3	IO								
		pr0_pru1_gpo10	0x4	O								
		pr0_pru1_gpi10	0x5	I								
		ehrpwm1_tripzone_input	0x6	I								
		gpio4_16	0x7	IO								
AE22	cam1_data3	cam1_data3	0x0	I	L	L	Mode7	VDDSHV2	Yes	6	PU/PD	LVCMOS
		uart1_rtsn	0x1	O								
		spi3_sclk	0x2	IO								
		mmc2_cmd	0x3	IO								
		pr0_pru1_gpo11	0x4	O								
		pr0_pru1_gpi11	0x5	I								
		pr1_edc_latch0_in	0x6	I								
		gpio4_17	0x7	IO								
AD22	cam1_data4	cam1_data4	0x0	I	L	L	Mode7	VDDSHV2	Yes	6	PU/PD	LVCMOS
		uart1_rin	0x1	I								
		uart2_rxd	0x2	IO								
		mmc2_dat0	0x3	IO								
		pr0_pru1_gpo12	0x4	O								
		pr0_pru1_gpi12	0x5	I								
		pr1_edc_latch1_in	0x6	I								
		gpio4_18	0x7	IO								
		uart0_dcdn	0x8	I								
AE23	cam1_data5	cam1_data5	0x0	I	H	H	Mode7	VDDSHV2	Yes	6	PU/PD	LVCMOS
		uart1_dsrn	0x1	I								
		uart2_txd	0x2	IO								
		mmc2_dat1	0x3	IO								
		pr0_pru1_gpo13	0x4	O								
		pr0_pru1_gpi13	0x5	I								
		pr1_edio_latch_in	0x6	I								
		gpio4_19	0x7	IO								

Copyright © 2014–2019, Texas Instruments Incorporated

Table 4-10. Pin Attributes (ZDN Package) (continued)

BALL NUMBER [1]	PIN NAME [2]	SIGNAL NAME [3]	MODE [4]	TYPE [5]	BALL RESET STATE [6]	BALL RESET REL. STATE [7]	BALL RESET REL. MODE [8]	POWER [9]	HYS [10]	BUFFER STRENGTH (mA) [11]	PULL UP/DOWN TYPE [12]	IO CELL [13]
AD23	cam1_data6	cam1_data6	0x0	I	L	L	Mode7	VDDSHV2	Yes	6	PU/PD	LVCMOS
		uart1_dcdn	0x1	I								
		uart2_ctsn	0x2	IO								
		mmc2_dat2	0x3	IO								
		pr0_pru1_gpo14	0x4	O								
		pr0_pru1_gpi14	0x5	I								
		pr1_edio_data_in0	0x6	I								
		gpio4_20	0x7	IO								
AE24	cam1_data7	cam1_data7	0x0	I	L	L	Mode7	VDDSHV2	Yes	6	PU/PD	LVCMOS
		uart1_dtrn	0x1	O								
		uart2_rtsn	0x2	O								
		mmc2_dat3	0x3	IO								
		pr0_pru1_gpo15	0x4	O								
		pr0_pru1_gpi15	0x5	I								
		pr1_edio_data_in1	0x6	I								
		gpio4_21	0x7	IO								
AD24	cam1_data8	cam1_data8	0x0	I	L	L	Mode7	VDDSHV2	Yes	6	PU/PD	LVCMOS
		xdma_event_intr3	0x1	I								
		spi0_cs2	0x2	IO								
		pr0_pru1_gpo0	0x3	O								
		spi2_d0	0x4	IO								
		pr0_pru1_gpi0	0x5	I								
		EMU10	0x6	IO								
		gpio4_8	0x7	IO								
		uart0_rtsn	0x8	O								
AC24	cam1_data9	cam1_data9	0x0	I	L	L	Mode7	VDDSHV2	Yes	6	PU/PD	LVCMOS
		dss_data16	0x2	O								
		pr0_pru0_gpo17	0x3	O								
		spi2_cs3	0x4	IO								
		pr0_pru0_gpi17	0x5	I								
		EMU9	0x6	IO								
		gpio4_7	0x7	IO								
		uart0_ctsn	0x8	I								
F19	CAP_VBB_MPU	CAP_VBB_MPU	NA	A	NA	NA	NA	NA	NA	NA	NA	NA
D6	CAP_VDDS1P8V_IOLDO	CAP_VDDS1P8V_IOLDO	NA	POWER	NA	NA	NA	NA	NA	NA	NA	NA
AD3	CAP_VDD_RTC	CAP_VDD_RTC	NA	A	NA	NA	NA	NA	NA	NA	NA	NA
E13	CAP_VDD_SRAM_CORE	CAP_VDD_SRAM_CORE	NA	A	NA	NA	NA	NA	NA	NA	NA	NA
E14	CAP_VDD_SRAM_MPU	CAP_VDD_SRAM_MPU	NA	A	NA	NA	NA	NA	NA	NA	NA	NA

Copyright © 2014–2019, Texas Instruments Incorporated

Table 4-10. Pin Attributes (ZDN Package) (continued)

BALL NUMBER [1]	PIN NAME [2]	SIGNAL NAME [3]	MODE [4]	TYPE [5]	BALL RESET STATE [6]	BALL RESET REL. STATE [7]	BALL RESET REL. MODE [8]	POWER [9]	HYS [10]	BUFFER STRENGTH (mA) [11]	PULL UP/DOWN TYPE [12]	IO CELL [13]
H20	clkreq	clkreq	0x0	O	OFF	H	Mode0	VDDSHV3	Yes	6	PU/PD	LVCMOS
		gpio0_24	0x7	IO								
N1	ddr_a0	ddr_a0	0x0	O	H		Mode0	VDDS_DDR	YES	8 (4)	PU/PD	LVCMOS/HSTL/HSUL_12
L1	ddr_a1	ddr_a1	0x0	O	H		Mode0	VDDS_DDR	YES	8 (4)	PU/PD	LVCMOS/HSTL/HSUL_12
L2	ddr_a2	ddr_a2	0x0	O	H		Mode0	VDDS_DDR	YES	8 (4)	PU/PD	LVCMOS/HSTL/HSUL_12
P2	ddr_a3	ddr_a3	0x0	O	H		Mode0	VDDS_DDR	YES	8 (4)	PU/PD	LVCMOS/HSTL/HSUL_12
P1	ddr_a4	ddr_a4	0x0	O	H		Mode0	VDDS_DDR	YES	8 (4)	PU/PD	LVCMOS/HSTL/HSUL_12
R5	ddr_a5	ddr_a5	0x0	O	H		Mode0	VDDS_DDR	YES	8 (4)	PU/PD	LVCMOS/HSTL/HSUL_12
R4	ddr_a6	ddr_a6	0x0	O	H		Mode0	VDDS_DDR	YES	8 (4)	PU/PD	LVCMOS/HSTL/HSUL_12
R3	ddr_a7	ddr_a7	0x0	O	H		Mode0	VDDS_DDR	YES	8 (4)	PU/PD	LVCMOS/HSTL/HSUL_12
R2	ddr_a8	ddr_a8	0x0	O	H		Mode0	VDDS_DDR	YES	8 (4)	PU/PD	LVCMOS/HSTL/HSUL_12
R1	ddr_a9	ddr_a9	0x0	O	H		Mode0	VDDS_DDR	YES	8 (4)	PU/PD	LVCMOS/HSTL/HSUL_12
M6	ddr_a10	ddr_a10	0x0	O	H		Mode0	VDDS_DDR	YES	8 (4)	PU/PD	LVCMOS/HSTL/HSUL_12
T5	ddr_a11	ddr_a11	0x0	O	H		Mode0	VDDS_DDR	YES	8 (4)	PU/PD	LVCMOS/HSTL/HSUL_12
T4	ddr_a12	ddr_a12	0x0	O	H		Mode0	VDDS_DDR	YES	8 (4)	PU/PD	LVCMOS/HSTL/HSUL_12
N5	ddr_a13	ddr_a13	0x0	O	H		Mode0	VDDS_DDR	YES	8 (4)	PU/PD	LVCMOS/HSTL/HSUL_12
T3	ddr_a14	ddr_a14	0x0	O	H		Mode0	VDDS_DDR	YES	8 (4)	PU/PD	LVCMOS/HSTL/HSUL_12
T2	ddr_a15	ddr_a15	0x0	O	H		Mode0	VDDS_DDR	YES	8 (4)	PU/PD	LVCMOS/HSTL/HSUL_12
K1	ddr_ba0	ddr_ba0	0x0	O	H		Mode0	VDDS_DDR	YES	8 (4)	PU/PD	LVCMOS/HSTL/HSUL_12
K2	ddr_ba1	ddr_ba1	0x0	O	H		Mode0	VDDS_DDR	YES	8 (4)	PU/PD	LVCMOS/HSTL/HSUL_12
K3	ddr_ba2	ddr_ba2	0x0	O	H		Mode0	VDDS_DDR	YES	8 (4)	PU/PD	LVCMOS/HSTL/HSUL_12
N3	ddr_casn	ddr_casn	0x0	O	H		Mode0	VDDS_DDR	YES	8 (4)	PU/PD	LVCMOS/HSTL/HSUL_12
M2	ddr_ck	ddr_ck	0x0	O	L		Mode0	VDDS_DDR	YES	8 (4)	PU/PD	LVCMOS/HSTL/HSUL_12
M3	ddr_cke0	ddr_cke0	0x0	O	L		Mode0	VDDS_DDR	YES	8 (4)	PU/PD	LVCMOS/HSTL/HSUL_12

Copyright © 2014–2019, Texas Instruments Incorporated

Table 4-10. Pin Attributes (ZDN Package) (continued)

BALL NUMBER [1]	PIN NAME [2]	SIGNAL NAME [3]	MODE [4]	TYPE [5]	BALL RESET STATE [6]	BALL RESET REL. STATE [7]	BALL RESET REL. MODE [8]	POWER [9]	HYS [10]	BUFFER STRENGTH (mA) [11]	PULL UP/DOWN TYPE [12]	IO CELL [13]
N6	ddr_cke1	ddr_cke1	0x0	O	L		Mode0	VDDS_DDR	YES	8 (4)	PU/PD	LVCMOS/HSTL/HSUL_12
M5	ddr_csn0	ddr_csn0	0x0	O	H		Mode0	VDDS_DDR	YES	8 (4)	PU/PD	LVCMOS/HSTL/HSUL_12
M4	ddr_csn1	ddr_csn1	0x0	O	H		Mode0	VDDS_DDR	YES	8 (4)	PU/PD	LVCMOS/HSTL/HSUL_12
E3	ddr_d0	ddr_d0	0x0	IO	L		Mode0	VDDS_DDR	YES	8 (4)	PU/PD	LVCMOS/HSTL/HSUL_12
E2	ddr_d1	ddr_d1	0x0	IO	L		Mode0	VDDS_DDR	YES	8 (4)	PU/PD	LVCMOS/HSTL/HSUL_12
E1	ddr_d2	ddr_d2	0x0	IO	L		Mode0	VDDS_DDR	YES	8 (4)	PU/PD	LVCMOS/HSTL/HSUL_12
F3	ddr_d3	ddr_d3	0x0	IO	L		Mode0	VDDS_DDR	YES	8 (4)	PU/PD	LVCMOS/HSTL/HSUL_12
G4	ddr_d4	ddr_d4	0x0	IO	L		Mode0	VDDS_DDR	YES	8 (4)	PU/PD	LVCMOS/HSTL/HSUL_12
G3	ddr_d5	ddr_d5	0x0	IO	L		Mode0	VDDS_DDR	YES	8 (4)	PU/PD	LVCMOS/HSTL/HSUL_12
G2	ddr_d6	ddr_d6	0x0	IO	L		Mode0	VDDS_DDR	YES	8 (4)	PU/PD	LVCMOS/HSTL/HSUL_12
G1	ddr_d7	ddr_d7	0x0	IO	L		Mode0	VDDS_DDR	YES	8 (4)	PU/PD	LVCMOS/HSTL/HSUL_12
H1	ddr_d8	ddr_d8	0x0	IO	L		Mode0	VDDS_DDR	YES	8 (4)	PU/PD	LVCMOS/HSTL/HSUL_12
J6	ddr_d9	ddr_d9	0x0	IO	L		Mode0	VDDS_DDR	YES	8 (4)	PU/PD	LVCMOS/HSTL/HSUL_12
J5	ddr_d10	ddr_d10	0x0	IO	L		Mode0	VDDS_DDR	YES	8 (4)	PU/PD	LVCMOS/HSTL/HSUL_12
J4	ddr_d11	ddr_d11	0x0	IO	L		Mode0	VDDS_DDR	YES	8 (4)	PU/PD	LVCMOS/HSTL/HSUL_12
J3	ddr_d12	ddr_d12	0x0	IO	L		Mode0	VDDS_DDR	YES	8 (4)	PU/PD	LVCMOS/HSTL/HSUL_12
K6	ddr_d13	ddr_d13	0x0	IO	L		Mode0	VDDS_DDR	YES	8 (4)	PU/PD	LVCMOS/HSTL/HSUL_12
K5	ddr_d14	ddr_d14	0x0	IO	L		Mode0	VDDS_DDR	YES	8 (4)	PU/PD	LVCMOS/HSTL/HSUL_12
K4	ddr_d15	ddr_d15	0x0	IO	L		Mode0	VDDS_DDR	YES	8 (4)	PU/PD	LVCMOS/HSTL/HSUL_12
V5	ddr_d16	ddr_d16	0x0	IO	L		Mode0	VDDS_DDR	YES	8 (4)	PU/PD	LVCMOS/HSTL/HSUL_12
V4	ddr_d17	ddr_d17	0x0	IO	L		Mode0	VDDS_DDR	YES	8 (4)	PU/PD	LVCMOS/HSTL/HSUL_12
V3	ddr_d18	ddr_d18	0x0	IO	L		Mode0	VDDS_DDR	YES	8 (4)	PU/PD	LVCMOS/HSTL/HSUL_12
V2	ddr_d19	ddr_d19	0x0	IO	L		Mode0	VDDS_DDR	YES	8 (4)	PU/PD	LVCMOS/HSTL/HSUL_12

Copyright © 2014–2019, Texas Instruments Incorporated

Table 4-10. Pin Attributes (ZDN Package) (continued)

BALL NUMBER [1]	PIN NAME [2]	SIGNAL NAME [3]	MODE [4]	TYPE [5]	BALL RESET STATE [6]	BALL RESET REL. STATE [7]	BALL RESET REL. MODE [8]	POWER [9]	HYS [10]	BUFFER STRENGTH (mA) [11]	PULL UP/DOWN TYPE [12]	IO CELL [13]
V1	ddr_d20	ddr_d20	0x0	IO	L		Mode0	VDDS_DDR	YES	8 (4)	PU/PD	LVCMOS/HSTL/HSUL_12
W4	ddr_d21	ddr_d21	0x0	IO	L		Mode0	VDDS_DDR	YES	8 (4)	PU/PD	LVCMOS/HSTL/HSUL_12
W5	ddr_d22	ddr_d22	0x0	IO	L		Mode0	VDDS_DDR	YES	8 (4)	PU/PD	LVCMOS/HSTL/HSUL_12
W6	ddr_d23	ddr_d23	0x0	IO	L		Mode0	VDDS_DDR	YES	8 (4)	PU/PD	LVCMOS/HSTL/HSUL_12
Y2	ddr_d24	ddr_d24	0x0	IO	L		Mode0	VDDS_DDR	YES	8 (4)	PU/PD	LVCMOS/HSTL/HSUL_12
Y3	ddr_d25	ddr_d25	0x0	IO	L		Mode0	VDDS_DDR	YES	8 (4)	PU/PD	LVCMOS/HSTL/HSUL_12
Y4	ddr_d26	ddr_d26	0x0	IO	L		Mode0	VDDS_DDR	YES	8 (4)	PU/PD	LVCMOS/HSTL/HSUL_12
AA3	ddr_d27	ddr_d27	0x0	IO	L		Mode0	VDDS_DDR	YES	8 (4)	PU/PD	LVCMOS/HSTL/HSUL_12
AB2	ddr_d28	ddr_d28	0x0	IO	L		Mode0	VDDS_DDR	YES	8 (4)	PU/PD	LVCMOS/HSTL/HSUL_12
AB1	ddr_d29	ddr_d29	0x0	IO	L		Mode0	VDDS_DDR	YES	8 (4)	PU/PD	LVCMOS/HSTL/HSUL_12
AC1	ddr_d30	ddr_d30	0x0	IO	L		Mode0	VDDS_DDR	YES	8 (4)	PU/PD	LVCMOS/HSTL/HSUL_12
AC2	ddr_d31	ddr_d31	0x0	IO	L		Mode0	VDDS_DDR	YES	8 (4)	PU/PD	LVCMOS/HSTL/HSUL_12
F4	ddr_dqm0	ddr_dqm0	0x0	O	H		Mode0	VDDS_DDR	YES	8 (4)	PU/PD	LVCMOS/HSTL/HSUL_12
H2	ddr_dqm1	ddr_dqm1	0x0	O	H		Mode0	VDDS_DDR	YES	8 (4)	PU/PD	LVCMOS/HSTL/HSUL_12
V6	ddr_dqm2	ddr_dqm2	0x0	O	H		Mode0	VDDS_DDR	YES	8 (4)	PU/PD	LVCMOS/HSTL/HSUL_12
Y1	ddr_dqm3	ddr_dqm3	0x0	O	H		Mode0	VDDS_DDR	YES	8 (4)	PU/PD	LVCMOS/HSTL/HSUL_12
F2	ddr_dqs0	ddr_dqs0	0x0	IO	L		Mode0	VDDS_DDR	YES	8 (4)	PU/PD	LVCMOS/HSTL/HSUL_12
J2	ddr_dqs1	ddr_dqs1	0x0	IO	L		Mode0	VDDS_DDR	YES	8 (4)	PU/PD	LVCMOS/HSTL/HSUL_12
W1	ddr_dqs2	ddr_dqs2	0x0	IO	L		Mode0	VDDS_DDR	YES	8 (4)	PU/PD	LVCMOS/HSTL/HSUL_12
AA1	ddr_dqs3	ddr_dqs3	0x0	IO	L		Mode0	VDDS_DDR	YES	8 (4)	PU/PD	LVCMOS/HSTL/HSUL_12
F1	ddr_dqsn0	ddr_dqsn0	0x0	IO	H		Mode0	VDDS_DDR	Yes	8 (4)	PU/PD	LVCMOS/HSTL/HSUL_12
J1	ddr_dqsn1	ddr_dqsn1	0x0	IO	H		Mode0	VDDS_DDR	Yes	8 (4)	PU/PD	LVCMOS/HSTL/HSUL_12
W2	ddr_dqsn2	ddr_dqsn2	0x0	IO	H		Mode0	VDDS_DDR	Yes	8 (4)	PU/PD	LVCMOS/HSTL/HSUL_12

Copyright © 2014–2019, Texas Instruments Incorporated

Table 4-10. Pin Attributes (ZDN Package) (continued)

BALL NUMBER [1]	PIN NAME [2]	SIGNAL NAME [3]	MODE [4]	TYPE [5]	BALL RESET STATE [6]	BALL RESET REL. STATE [7]	BALL RESET REL. MODE [8]	POWER [9]	HYS [10]	BUFFER STRENGTH (mA) [11]	PULL UP/DOWN TYPE [12]	IO CELL [13]
AA2	ddr_dqsn3	ddr_dqsn3	0x0	IO	H		Mode0	VDDS_DDR	Yes	8 (4)	PU/PD	LVCMOS/HSTL/HSUL_12
M1	ddr_nck	ddr_nck	0x0	O	H		Mode0	VDDS_DDR	YES	8 (4)	PU/PD	LVCMOS/HSTL/HSUL_12
U1	ddr_odt0	ddr_odt0	0x0	O	L		Mode0	VDDS_DDR	YES	8 (4)	PU/PD	LVCMOS/HSTL/HSUL_12
U2	ddr_odt1	ddr_odt1	0x0	O	L		Mode0	VDDS_DDR	YES	8 (4)	PU/PD	LVCMOS/HSTL/HSUL_12
N2	ddr_rasn	ddr_rasn	0x0	O	H		Mode0	VDDS_DDR	YES	8 (4)	PU/PD	LVCMOS/HSTL/HSUL_12
T1	ddr_resetn	ddr_resetn	0x0	O	L		Mode0	VDDS_DDR	YES	8 (4)	PU/PD	LVCMOS
T6	ddr_vref	ddr_vref	0x0	AP (24)	NA	NA	Mode0	VDDS_DDR	NA	NA	NA	Analog
AC3	ddr_vtp	ddr_vtp	0x0	I (25)	NA	NA	Mode0	VDDS_DDR	NA	NA	NA	Analog
N4	ddr_wen	ddr_wen	0x0	O	H		Mode0	VDDS_DDR	YES	8 (4)	PU/PD	LVCMOS/HSTL/HSUL_12
A24	dss_ac_bias_en	dss_ac_bias_en	0x0	O	OFF	OFF (5)	Mode7	VDDSHV6	Yes	6	PU/PD	LVCMOS
		gpmc_a11	0x1	O								
		gpmc_a4	0x2	O								
		pr1_edio_data_in5	0x3	I								
		pr1_edio_data_out5	0x4	O								
		pr0_pru1_gpo9	0x5	O								
		pr0_pru1_gpi9	0x6	I								
		gpio2_25	0x7	IO								
B22	dss_data0 (6)	dss_data0	0x0	IO	OFF	OFF	Mode7	VDDSHV6	Yes	6	PU/PD	LVCMOS
		gpmc_a0	0x1	O								
		pr1_mii_mt0_clk	0x2	I								
		ehrpwm2A	0x3	O								
		pr1_pru0_gpo0	0x5	O								
		pr1_pru0_gpi0	0x6	I								
		gpio2_6	0x7	IO								
A21	dss_data1 (6)	dss_data1	0x0	IO	OFF	OFF	Mode7	VDDSHV6	Yes	6	PU/PD	LVCMOS
		gpmc_a1	0x1	O								
		pr1_mii0_txen	0x2	O								
		ehrpwm2B	0x3	O								
		pr1_pru0_gpo1	0x5	O								
		pr1_pru0_gpi1	0x6	I								
		gpio2_7	0x7	IO								

Copyright © 2014–2019, Texas Instruments Incorporated

Table 4-10. Pin Attributes (ZDN Package) (continued)

BALL NUMBER [1]	PIN NAME [2]	SIGNAL NAME [3]	MODE [4]	TYPE [5]	BALL RESET STATE [6]	BALL RESET REL. STATE [7]	BALL RESET REL. MODE [8]	POWER [9]	HYS [10]	BUFFER STRENGTH (mA) [11]	PULL UP/DOWN TYPE [12]	IO CELL [13]
B21	dss_data2 (6)	dss_data2	0x0	IO	OFF	OFF	Mode7	VDDSHV6	Yes	6	PU/PD	LVCMOS
		gpmc_a2	0x1	O								
		pr1_mii0_txd3	0x2	O								
		ehrpwm2_tripzone_input	0x3	I								
		pr1_pru0_gpo2	0x5	O								
		pr1_pru0_gpi2	0x6	I								
		gpio2_8	0x7	IO								
C21	dss_data3 (6)	dss_data3	0x0	IO	OFF	OFF	Mode7	VDDSHV6	Yes	6	PU/PD	LVCMOS
		gpmc_a3	0x1	O								
		pr1_mii0_txd2	0x2	O								
		ehrpwm0_synco	0x3	O								
		pr1_pru0_gpo3	0x5	O								
		pr1_pru0_gpi3	0x6	I								
		gpio2_9	0x7	IO								
A20	dss_data4 (6)	dss_data4	0x0	IO	OFF	OFF	Mode7	VDDSHV6	Yes	6	PU/PD	LVCMOS
		gpmc_a4	0x1	O								
		pr1_mii0_txd1	0x2	O								
		eQEP2A_in	0x3	I								
		pr1_pru0_gpo4	0x5	O								
		pr1_pru0_gpi4	0x6	I								
		gpio2_10	0x7	IO								
B20	dss_data5 (6)	dss_data5	0x0	IO	OFF	OFF	Mode7	VDDSHV6	Yes	6	PU/PD	LVCMOS
		gpmc_a5	0x1	O								
		pr1_mii0_txd0	0x2	O								
		eQEP2B_in	0x3	I								
		pr1_pru0_gpo5	0x5	O								
		pr1_pru0_gpi5	0x6	I								
		gpio2_11	0x7	IO								
C20	dss_data6 (6)	dss_data6	0x0	IO	OFF	OFF	Mode7	VDDSHV6	Yes	6	PU/PD	LVCMOS
		gpmc_a6	0x1	O								
		pr1_edio_data_in6	0x2	I								
		eQEP2_index	0x3	IO								
		pr1_edio_data_out6	0x4	O								
		pr1_pru0_gpo6	0x5	O								
		pr1_pru0_gpi6	0x6	I								
		gpio2_12	0x7	IO								

Copyright © 2014–2019, Texas Instruments Incorporated

Table 4-10. Pin Attributes (ZDN Package) (continued)

BALL NUMBER [1]	PIN NAME [2]	SIGNAL NAME [3]	MODE [4]	TYPE [5]	BALL RESET STATE [6]	BALL RESET REL. STATE [7]	BALL RESET REL. MODE [8]	POWER [9]	HYS [10]	BUFFER STRENGTH (mA) [11]	PULL UP/DOWN TYPE [12]	IO CELL [13]
E19	dss_data7 (6)	dss_data7	0x0	IO	OFF	OFF	Mode7	VDDSHV6	Yes	6	PU/PD	LVCMOS
		gpmc_a7	0x1	O								
		pr1_edio_data_in7	0x2	I								
		eQEP2_strobe	0x3	IO								
		pr1_edio_data_out7	0x4	O								
		pr1_pru0_gpo7	0x5	O								
		pr1_pru0_gpi7	0x6	I								
		gpio2_13	0x7	IO								
A19	dss_data8 (6)	dss_data8	0x0	IO	OFF	OFF	Mode7	VDDSHV6	Yes	6	PU/PD	LVCMOS
		gpmc_a12	0x1	O								
		ehrpwm1_tripzone_input	0x2	I								
		mcasp0_aclkx	0x3	IO								
		uart5_txd	0x4	O								
		pr1_mii0_rxd3	0x5	I								
		uart2_ctsn	0x6	IO								
		gpio2_14	0x7	IO								
B19	dss_data9 (6)	dss_data9	0x0	IO	OFF	OFF	Mode7	VDDSHV6	Yes	6	PU/PD	LVCMOS
		gpmc_a13	0x1	O								
		ehrpwm0_synco	0x2	O								
		mcasp0_fsx	0x3	IO								
		uart5_rxd	0x4	I								
		pr1_mii0_rxd2	0x5	I								
		uart2_rtsn	0x6	O								
		gpio2_15	0x7	IO								
A18	dss_data10 (6)	dss_data10	0x0	IO	OFF	OFF	Mode7	VDDSHV6	Yes	6	PU/PD	LVCMOS
		gpmc_a14	0x1	O								
		ehrpwm1A	0x2	O								
		mcasp0_axr0	0x3	IO								
		pr1_mii0_rxd1	0x5	I								
		uart3_ctsn	0x6	IO								
		gpio2_16	0x7	IO								

Copyright © 2014–2019, Texas Instruments Incorporated

Table 4-10. Pin Attributes (ZDN Package) (continued)

BALL NUMBER [1]	PIN NAME [2]	SIGNAL NAME [3]	MODE [4]	TYPE [5]	BALL RESET STATE [6]	BALL RESET REL. STATE [7]	BALL RESET REL. MODE [8]	POWER [9]	HYS [10]	BUFFER STRENGTH (mA) [11]	PULL UP/DOWN TYPE [12]	IO CELL [13]
B18	dss_data11 (6)	dss_data11	0x0	IO	OFF	OFF	Mode7	VDDSHV6	Yes	6	PU/PD	LVCMOS
		gpmc_a15	0x1	O								
		ehrpwm1B	0x2	O								
		mcasp0_ahclkr	0x3	IO								
		mcasp0_axr2	0x4	IO								
		pr1_mii0_rxd0	0x5	I								
		uart3_rtsn	0x6	O								
		gpio2_17	0x7	IO								
		spi3_cs1	0x8	IO								
C19	dss_data12 (6)	dss_data12	0x0	IO	OFF	OFF	Mode7	VDDSHV6	Yes	6	PU/PD	LVCMOS
		gpmc_a16	0x1	O								
		eQEP1A_in	0x2	I								
		mcasp0_aclkr	0x3	IO								
		mcasp0_axr2	0x4	IO								
		pr1_mii0_rxlink	0x5	I								
		uart4_ctsn	0x6	I								
		gpio0_8	0x7	IO								
		spi3_sclk	0x8	IO								
D19	dss_data13 (6)	dss_data13	0x0	IO	OFF	OFF	Mode7	VDDSHV6	Yes	6	PU/PD	LVCMOS
		gpmc_a17	0x1	O								
		eQEP1B_in	0x2	I								
		mcasp0_fsr	0x3	IO								
		mcasp0_axr3	0x4	IO								
		pr1_mii0_rxer	0x5	I								
		uart4_rtsn	0x6	O								
		gpio0_9	0x7	IO								
		spi3_d0	0x8	IO								
C17	dss_data14 (6)	dss_data14	0x0	IO	OFF	OFF	Mode7	VDDSHV6	Yes	6	PU/PD	LVCMOS
		gpmc_a18	0x1	O								
		eQEP1_index	0x2	IO								
		mcasp0_axr1	0x3	IO								
		uart5_rxd	0x4	I								
		pr1_mii_mr0_clk	0x5	I								
		uart5_ctsn	0x6	I								
		gpio0_10	0x7	IO								
		spi3_d1	0x8	IO								

Copyright © 2014–2019, Texas Instruments Incorporated

Table 4-10. Pin Attributes (ZDN Package) (continued)

BALL NUMBER [1]	PIN NAME [2]	SIGNAL NAME [3]	MODE [4]	TYPE [5]	BALL RESET STATE [6]	BALL RESET REL. STATE [7]	BALL RESET REL. MODE [8]	POWER [9]	HYS [10]	BUFFER STRENGTH (mA) [11]	PULL UP/DOWN TYPE [12]	IO CELL [13]
D17	dss_data15 (6)	dss_data15	0x0	IO	OFF	OFF	Mode7	VDDSHV6	Yes	6	PU/PD	LVCMOS
		gpmc_a19	0x1	O								
		eQEP1_strobe	0x2	IO								
		mcasp0_ahclkx	0x3	IO								
		mcasp0_axr3	0x4	IO								
		pr1_mii0_rxdv	0x5	I								
		uart5_rtsn	0x6	O								
		gpio0_11	0x7	IO								
		spi3_cs0	0x8	IO								
A23	dss_hsync (7)	dss_hsync	0x0	O	OFF	OFF	Mode7	VDDSHV6	Yes	6	PU/PD	LVCMOS
		gpmc_a9	0x1	O								
		gpmc_a2	0x2	O								
		pr1_edio_data_in3	0x3	I								
		pr1_edio_data_out3	0x4	O								
		pr0_pru1_gpo7	0x5	O								
		pr0_pru1_gpi7	0x6	I								
		gpio2_23	0x7	IO								
A22	dss_pclk	dss_pclk	0x0	O	OFF	L	Mode7	VDDSHV6	Yes	6	PU/PD	LVCMOS
		gpmc_a10	0x1	O								
		gpmc_a3	0x2	O								
		pr1_edio_data_in4	0x3	I								
		pr1_edio_data_out4	0x4	O								
		pr0_pru1_gpo8	0x5	O								
		pr0_pru1_gpi8	0x6	I								
		gpio2_24	0x7	IO								
B23	dss_vsync (8)	dss_vsync	0x0	O	OFF	OFF	Mode7	VDDSHV6	Yes	6	PU/PD	LVCMOS
		gpmc_a8	0x1	O								
		gpmc_a1	0x2	O								
		pr1_edio_data_in2	0x3	I								
		pr1_edio_data_out2	0x4	O								
		pr0_pru1_gpo6	0x5	O								
		pr0_pru1_gpi6	0x6	I								
		gpio2_22	0x7	IO								

Copyright © 2014–2019, Texas Instruments Incorporated

Table 4-10. Pin Attributes (ZDN Package) (continued)

BALL NUMBER [1]	PIN NAME [2]	SIGNAL NAME [3]	MODE [4]	TYPE [5]	BALL RESET STATE [6]	BALL RESET REL. STATE [7]	BALL RESET REL. MODE [8]	POWER [9]	HYS [10]	BUFFER STRENGTH (mA) [11]	PULL UP/DOWN TYPE [12]	IO CELL [13]
G24	eCAP0_in_PWM0_out	eCAP0_in_PWM0_out	0x0	IO	OFF	L	Mode7	VDDSHV3	Yes	6	PU/PD	LVCMOS
		uart3_txd	0x1	IO								
		spi1_cs1	0x2	IO								
		pr1_ecap0_ecap_capin_apwm_o	0x3	IO								
		spi1_sclk	0x4	IO								
		mmc0_sdwp	0x5	I								
		xdma_event_intr2	0x6	I								
		gpio0_7	0x7	IO								
		ehrpwm2B	0x8	O								
		timer1	0x9	IO								
N23	EMU0	EMU0	0x0	IO	H	H	Mode0	VDDSHV3	Yes	6	PU/PD	LVCMOS
		gpio3_7	0x7	IO								
T24	EMU1	EMU1	0x0	IO	H	H	Mode0	VDDSHV3	Yes	6	PU/PD	LVCMOS
		gpio3_8	0x7	IO								
G25	EXTINTn	nNMI	0x0	I	OFF	H	Mode0	VDDSHV3	Yes	NA	PU/PD	LVCMOS
D25	gpio5_8	pr1_mii0_col	0x5	I	OFF	L	Mode7	VDDSHV3	Yes	6	PU/PD	LVCMOS
		gpio5_8	0x7	IO								
F24	gpio5_9	pr1_mii1_col	0x5	I	OFF	L	Mode7	VDDSHV3	Yes	6	PU/PD	LVCMOS
		gpio5_9	0x7	IO								
G20	gpio5_10	I2C1_SCL	0x1	IOD	OFF	L	Mode7	VDDSHV3	Yes	6	PU/PD	LVCMOS
		pr1_mii0_crs	0x5	I								
		gpio5_10	0x7	IO								
F23	gpio5_11	pr1_mii1_crs	0x5	I	OFF	L	Mode7	VDDSHV3	Yes	6	PU/PD	LVCMOS
		gpio5_11	0x7	IO								
E25	gpio5_12	I2C1_SDA	0x1	IOD	OFF	L	Mode7	VDDSHV3	Yes	6	PU/PD	LVCMOS
		pr1_mii0_rxlink	0x5	I								
		gpio5_12	0x7	IO								
E24	gpio5_13	pr1_mii1_rxlink	0x5	I	OFF	L	Mode7	VDDSHV3	Yes	6	PU/PD	LVCMOS
		gpio5_13	0x7	IO								
C3	gpmc_a0	gpmc_a0	0x0	O	L	L	Mode7	VDDSHV11	Yes	6	PU/PD	LVCMOS
		gmii2_txen	0x1	O								
		rgmii2_tctl	0x2	O								
		rmii2_txen	0x3	O								
		gpmc_a16	0x4	O								
		pr1_mii1_txen	0x5	O								
		ehrpwm1_tripzone_input	0x6	I								
		gpio1_16	0x7	IO								

Copyright © 2014–2019, Texas Instruments Incorporated

Table 4-10. Pin Attributes (ZDN Package) (continued)

BALL NUMBER [1]	PIN NAME [2]	SIGNAL NAME [3]	MODE [4]	TYPE [5]	BALL RESET STATE [6]	BALL RESET REL. STATE [7]	BALL RESET REL. MODE [8]	POWER [9]	HYS [10]	BUFFER STRENGTH (mA) [11]	PULL UP/DOWN TYPE [12]	IO CELL [13]
C5	gpmc_a1	gpmc_a1	0x0	O	L	L	Mode7	VDDSHV11	Yes	6	PU/PD	LVCMOS
		gmii2_rxdv	0x1	I								
		rgmii2_rctl	0x2	I								
		mmc2_dat0	0x3	IO								
		gpmc_a17	0x4	O								
		pr1_mii1_rxdv	0x5	I								
		ehrpwm0_synco	0x6	O								
		gpio1_17	0x7	IO								
C6	gpmc_a2	gpmc_a2	0x0	O	L	L	Mode7	VDDSHV11	Yes	6	PU/PD	LVCMOS
		gmii2_txd3	0x1	O								
		rgmii2_td3	0x2	O								
		mmc2_dat1	0x3	IO								
		gpmc_a18	0x4	O								
		pr1_mii1_txd3	0x5	O								
		ehrpwm1A	0x6	O								
		gpio1_18	0x7	IO								
A4	gpmc_a3	gpmc_a3	0x0	O	L	L	Mode7	VDDSHV11	Yes	6	PU/PD	LVCMOS
		gmii2_txd2	0x1	O								
		rgmii2_td2	0x2	O								
		mmc2_dat2	0x3	IO								
		gpmc_a19	0x4	O								
		pr1_mii1_txd2	0x5	O								
		ehrpwm1B	0x6	O								
		gpio1_19	0x7	IO								
D7	gpmc_a4	gpmc_a4	0x0	O	L	L	Mode7	VDDSHV11	Yes	6	PU/PD	LVCMOS
		gmii2_txd1	0x1	O								
		rgmii2_td1	0x2	O								
		rmii2_txd1	0x3	O								
		gpmc_a20	0x4	O								
		pr1_mii1_txd1	0x5	O								
		eQEP1A_in	0x6	I								
		gpio1_20	0x7	IO								

Copyright © 2014–2019, Texas Instruments Incorporated

Table 4-10. Pin Attributes (ZDN Package) (continued)

BALL NUMBER [1]	PIN NAME [2]	SIGNAL NAME [3]	MODE [4]	TYPE [5]	BALL RESET STATE [6]	BALL RESET REL. STATE [7]	BALL RESET REL. MODE [8]	POWER [9]	HYS [10]	BUFFER STRENGTH (mA) [11]	PULL UP/DOWN TYPE [12]	IO CELL [13]
E7	gpmc_a5	gpmc_a5	0x0	O	L	L	Mode7	VDDSHV11	Yes	6	PU/PD	LVCMOS
		gmii2_txd0	0x1	O								
		rgmii2_td0	0x2	O								
		rmii2_txd0	0x3	O								
		gpmc_a21	0x4	O								
		pr1_mii1_txd0	0x5	O								
		eQEP1B_in	0x6	I								
		gpio1_21	0x7	IO								
E8	gpmc_a6	gpmc_a6	0x0	O	L	L	Mode7	VDDSHV11	Yes	6	PU/PD	LVCMOS
		gmii2_txclk	0x1	I								
		rgmii2_tclk	0x2	O								
		mmc2_dat4	0x3	IO								
		gpmc_a22	0x4	O								
		pr1_mii_mt1_clk	0x5	I								
		eQEP1_index	0x6	IO								
		gpio1_22	0x7	IO								
F6	gpmc_a7	gpmc_a7	0x0	O	L	L	Mode7	VDDSHV11	Yes	6	PU/PD	LVCMOS
		gmii2_rxclk	0x1	I								
		rgmii2_rclk	0x2	I								
		mmc2_dat5	0x3	IO								
		gpmc_a23	0x4	O								
		pr1_mii_mr1_clk	0x5	I								
		eQEP1_strobe	0x6	IO								
		gpio1_23	0x7	IO								
F7	gpmc_a8	gpmc_a8	0x0	O	L	L	Mode7	VDDSHV11	Yes	6	PU/PD	LVCMOS
		gmii2_rxd3	0x1	I								
		rgmii2_rd3	0x2	I								
		mmc2_dat6	0x3	IO								
		gpmc_a24	0x4	O								
		pr1_mii1_rxd3	0x5	I								
		mcasp0_aclkx	0x6	IO								
		gpio1_24	0x7	IO								

Copyright © 2014–2019, Texas Instruments Incorporated

Table 4-10. Pin Attributes (ZDN Package) (continued)

BALL NUMBER [1]	PIN NAME [2]	SIGNAL NAME [3]	MODE [4]	TYPE [5]	BALL RESET STATE [6]	BALL RESET REL. STATE [7]	BALL RESET REL. MODE [8]	POWER [9]	HYS [10]	BUFFER STRENGTH (mA) [11]	PULL UP/DOWN TYPE [12]	IO CELL [13]
B4	gpmc_a9	gpmc_a9	0x0	O	L	L	Mode7	VDDSHV11	Yes	6	PU/PD	LVCMOS
		gmii2_rxd2	0x1	I								
		rgmii2_rd2	0x2	I								
		mmc2_dat7	0x3	IO								
		gpmc_a25	0x4	O								
		pr1_mii1_rxd2	0x5	I								
		mcasp0_fsx	0x6	IO								
		gpio1_25	0x7	IO								
		rmii2_crs_dv	0x8	I								
G8	gpmc_a10	gpmc_a10	0x0	O	L	L	Mode7	VDDSHV11	Yes	6	PU/PD	LVCMOS
		gmii2_rxd1	0x1	I								
		rgmii2_rd1	0x2	I								
		rmii2_rxd1	0x3	I								
		gpmc_a26	0x4	O								
		pr1_mii1_rxd1	0x5	I								
		mcasp0_axr0	0x6	IO								
		gpio1_26	0x7	IO								
D8	gpmc_a11	gpmc_a11	0x0	O	L	L	Mode7	VDDSHV11	Yes	6	PU/PD	LVCMOS
		gmii2_rxd0	0x1	I								
		rgmii2_rd0	0x2	I								
		rmii2_rxd0	0x3	I								
		gpmc_a27	0x4	O								
		pr1_mii1_rxd0	0x5	I								
		mcasp0_axr1	0x6	IO								
		gpio1_27	0x7	IO								
B5	gpmc_ad0	gpmc_ad0	0x0	IO	L	L	Mode7	VDDSHV10	Yes	6	PU/PD	LVCMOS
		mmc1_dat0	0x1	IO								
		gpio1_0	0x7	IO								
A5	gpmc_ad1	gpmc_ad1	0x0	IO	L	L	Mode7	VDDSHV10	Yes	6	PU/PD	LVCMOS
		mmc1_dat1	0x1	IO								
		gpio1_1	0x7	IO								
B6	gpmc_ad2	gpmc_ad2	0x0	IO	L	L	Mode7	VDDSHV10	Yes	6	PU/PD	LVCMOS
		mmc1_dat2	0x1	IO								
		gpio1_2	0x7	IO								
A6	gpmc_ad3	gpmc_ad3	0x0	IO	L	L	Mode7	VDDSHV10	Yes	6	PU/PD	LVCMOS
		mmc1_dat3	0x1	IO								
		gpio1_3	0x7	IO								

Copyright © 2014–2019, Texas Instruments Incorporated

Table 4-10. Pin Attributes (ZDN Package) (continued)

BALL NUMBER [1]	PIN NAME [2]	SIGNAL NAME [3]	MODE [4]	TYPE [5]	BALL RESET STATE [6]	BALL RESET REL. STATE [7]	BALL RESET REL. MODE [8]	POWER [9]	HYS [10]	BUFFER STRENGTH (mA) [11]	PULL UP/DOWN TYPE [12]	IO CELL [13]
B7	gpmc_ad4	gpmc_ad4	0x0	IO	L	L	Mode7	VDDSHV10	Yes	6	PU/PD	LVCMOS
		mmc1_dat4	0x1	IO								
		gpio1_4	0x7	IO								
A7	gpmc_ad5	gpmc_ad5	0x0	IO	L	L	Mode7	VDDSHV10	Yes	6	PU/PD	LVCMOS
		mmc1_dat5	0x1	IO								
		gpio1_5	0x7	IO								
C8	gpmc_ad6	gpmc_ad6	0x0	IO	L	L	Mode7	VDDSHV10	Yes	6	PU/PD	LVCMOS
		mmc1_dat6	0x1	IO								
		gpio1_6	0x7	IO								
B8	gpmc_ad7	gpmc_ad7	0x0	IO	L	L	Mode7	VDDSHV10	Yes	6	PU/PD	LVCMOS
		mmc1_dat7	0x1	IO								
		gpio1_7	0x7	IO								
B10	gpmc_ad8	gpmc_ad8	0x0	IO	L	L	Mode7	VDDSHV9	Yes	6	PU/PD	LVCMOS
		dss_data23	0x1	O								
		mmc1_dat0	0x2	IO								
		mmc2_dat4	0x3	IO								
		ehrpwm2A	0x4	O								
		pr1_mii_mt0_clk	0x5	I								
		spi3_sclk	0x6	IO								
		gpio0_22	0x7	IO								
		spi3_cs1	0x8	IO								
		gpio5_26	0x9	IO								
A10	gpmc_ad9	gpmc_ad9	0x0	IO	L	L	Mode7	VDDSHV9	Yes	6	PU/PD	LVCMOS
		dss_data22	0x1	O								
		mmc1_dat1	0x2	IO								
		mmc2_dat5	0x3	IO								
		ehrpwm2B	0x4	O								
		pr1_mii0_col	0x5	I								
		spi3_d0	0x6	IO								
		gpio0_23	0x7	IO								
		gpio5_25	0x9	IO								

Copyright © 2014–2019, Texas Instruments Incorporated

Table 4-10. Pin Attributes (ZDN Package) (continued)

BALL NUMBER [1]	PIN NAME [2]	SIGNAL NAME [3]	MODE [4]	TYPE [5]	BALL RESET STATE [6]	BALL RESET REL. STATE [7]	BALL RESET REL. MODE [8]	POWER [9]	HYS [10]	BUFFER STRENGTH (mA) [11]	PULL UP/DOWN TYPE [12]	IO CELL [13]
F11	gpmc_ad10	gpmc_ad10	0x0	IO	L	L	Mode7	VDDSHV9	Yes	6	PU/PD	LVCMOS
		dss_data21	0x1	O								
		mmc1_dat2	0x2	IO								
		mmc2_dat6	0x3	IO								
		ehrpwm2_tripzone_input	0x4	I								
		pr1_mii0_txen	0x5	O								
		spi3_d1	0x6	IO								
		gpio0_26	0x7	IO								
		gpio5_24	0x9	IO								
D11	gpmc_ad11	gpmc_ad11	0x0	IO	L	L	Mode7	VDDSHV9	Yes	6	PU/PD	LVCMOS
		dss_data20	0x1	O								
		mmc1_dat3	0x2	IO								
		mmc2_dat7	0x3	IO								
		ehrpwm0_synco	0x4	O								
		pr1_mii0_txd3	0x5	O								
		spi3_cs0	0x6	IO								
		gpio0_27	0x7	IO								
		gpio5_23	0x9	IO								
E11	gpmc_ad12	gpmc_ad12	0x0	IO	L	L	Mode7	VDDSHV9	Yes	6	PU/PD	LVCMOS
		dss_data19	0x1	O								
		mmc1_dat4	0x2	IO								
		mmc2_dat0	0x3	IO								
		eQEP2A_in	0x4	I								
		pr1_mii0_txd2	0x5	O								
		pr1_pru0_gpi10	0x6	I								
		gpio1_12	0x7	IO								
		mcasp0_aclkx	0x8	IO								
		pr1_pru0_gpo10	0x9	O								
C11	gpmc_ad13	gpmc_ad13	0x0	IO	L	L	Mode7	VDDSHV9	Yes	6	PU/PD	LVCMOS
		dss_data18	0x1	O								
		mmc1_dat5	0x2	IO								
		mmc2_dat1	0x3	IO								
		eQEP2B_in	0x4	I								
		pr1_mii0_txd1	0x5	O								
		pr1_pru0_gpi11	0x6	I								
		gpio1_13	0x7	IO								
		mcasp0_fsx	0x8	IO								
		pr1_pru0_gpo11	0x9	O								

Copyright © 2014–2019, Texas Instruments Incorporated

Table 4-10. Pin Attributes (ZDN Package) (continued)

BALL NUMBER [1]	PIN NAME [2]	SIGNAL NAME [3]	MODE [4]	TYPE [5]	BALL RESET STATE [6]	BALL RESET REL. STATE [7]	BALL RESET REL. MODE [8]	POWER [9]	HYS [10]	BUFFER STRENGTH (mA) [11]	PULL UP/DOWN TYPE [12]	IO CELL [13]
B11	gpmc_ad14	gpmc_ad14	0x0	IO	L	L	Mode7	VDDSHV9	Yes	6	PU/PD	LVCMOS
		dss_data17	0x1	O								
		mmc1_dat6	0x2	IO								
		mmc2_dat2	0x3	IO								
		eQEP2_index	0x4	IO								
		pr1_mii0_txd0	0x5	O								
		pr1_pru0_gpi16	0x6	I								
		gpio1_14	0x7	IO								
		mcasp0_axr0	0x8	IO								
A11	gpmc_ad15	gpmc_ad15	0x0	IO	L	L	Mode7	VDDSHV9	Yes	6	PU/PD	LVCMOS
		dss_data16	0x1	O								
		mmc1_dat7	0x2	IO								
		mmc2_dat3	0x3	IO								
		eQEP2_strobe	0x4	IO								
		pr1_ecap0_ecap_capin_apwm_o	0x5	IO								
		gpio1_15	0x7	IO								
		mcasp0_axr1	0x8	IO								
		spi3_cs1	0x9	IO								
A9	gpmc_advn_ale	gpmc_advn_ale	0x0	O	H	H	Mode7	VDDSHV10	Yes	6	PU/PD	LVCMOS
		spi0_cs3	0x1	IO								
		timer4	0x2	IO								
		qspi_d0	0x3	IO								
		gpio2_2	0x7	IO								
C10	gpmc_be0n_cle	gpmc_be0n_cle	0x0	O	H	H	Mode7	VDDSHV10	Yes	6	PU/PD	LVCMOS
		spi1_cs3	0x1	IO								
		timer5	0x2	IO								
		qspi_d3	0x3	I								
		pr1_mii1_rxlink	0x4	I								
		gpmc_a5	0x5	O								
		spi3_cs1	0x6	IO								
		gpio2_5	0x7	IO								

Copyright © 2014–2019, Texas Instruments Incorporated

Table 4-10. Pin Attributes (ZDN Package) (continued)

BALL NUMBER [1]	PIN NAME [2]	SIGNAL NAME [3]	MODE [4]	TYPE [5]	BALL RESET STATE [6]	BALL RESET REL. STATE [7]	BALL RESET REL. MODE [8]	POWER [9]	HYS [10]	BUFFER STRENGTH (mA) [11]	PULL UP/DOWN TYPE [12]	IO CELL [13]
A3	gpmc_be1n	gpmc_be1n	0x0	O	H	H	Mode7	VDDSHV11	Yes	6	PU/PD	LVCMOS
		gmii2_col	0x1	I								
		gpmc_csn6	0x2	O								
		mmc2_dat3	0x3	IO								
		gpmc_dir	0x4	O								
		pr1_mii1_col	0x5	I								
		mcasp0_aclkr	0x6	IO								
		gpio1_28	0x7	IO								
A12	gpmc_clk	gpmc_clk	0x0	IO	L	L	Mode7	VDDSHV9	Yes	6	PU/PD	LVCMOS
		gpmc_wait1	0x2	I								
		mmc2_clk	0x3	IO								
		pr1_mii1_crs	0x4	I								
		pr1_mdio_mdclk	0x5	O								
		mcasp0_fsr	0x6	IO								
		gpio2_1	0x7	IO								
		gpio0_4	0x9	IO								
A8	gpmc_csn0	gpmc_csn0	0x0	O	H	H	Mode7	VDDSHV10	Yes	6	PU/PD	LVCMOS
		qspi_csn	0x3	O								
		gpio1_29	0x7	IO								
B9	gpmc_csn1	gpmc_csn1	0x0	O	H	H	Mode7	VDDSHV10	Yes	6	PU/PD	LVCMOS
		gpmc_clk	0x1	IO								
		mmc1_clk	0x2	IO								
		pr1_edio_data_in6	0x3	I								
		pr1_edio_data_out6	0x4	O								
		pr1_pru0_gpo8	0x5	O								
		pr1_pru0_gpi8	0x6	I								
		gpio1_30	0x7	IO								
F10	gpmc_csn2	gpmc_csn2	0x0	O	H	H	Mode7	VDDSHV10	Yes	6	PU/PD	LVCMOS
		gpmc_be1n	0x1	O								
		mmc1_cmd	0x2	IO								
		pr1_edio_data_in7	0x3	I								
		pr1_edio_data_out7	0x4	O								
		pr1_pru0_gpo9	0x5	O								
		pr1_pru0_gpi9	0x6	I								
		gpio1_31	0x7	IO								
		gmii2_crs	0x8	I								
		rmii2_crs_dv	0x9	I								

Copyright © 2014–2019, Texas Instruments Incorporated

Table 4-10. Pin Attributes (ZDN Package) (continued)

BALL NUMBER [1]	PIN NAME [2]	SIGNAL NAME [3]	MODE [4]	TYPE [5]	BALL RESET STATE [6]	BALL RESET REL. STATE [7]	BALL RESET REL. MODE [8]	POWER [9]	HYS [10]	BUFFER STRENGTH (mA) [11]	PULL UP/DOWN TYPE [12]	IO CELL [13]
B12	gpmc_csn3	gpmc_csn3	0x0	O	H	H	Mode7	VDDSHV9	Yes	6	PU/PD	LVCMOS
		gpmc_wait0	0x1	I								
		qspi_clk	0x2	IO								
		mmc2_cmd	0x3	IO								
		pr1_mii0_crs	0x4	I								
		pr1_mdio_data	0x5	IO								
		EMU4	0x6	IO								
		gpio2_0	0x7	IO								
		gmii2_crs	0x8	I								
		rmii2_crs_dv	0x9	I								
E10	gpmc_oen_ren	gpmc_oen_ren	0x0	O	H	H	Mode7	VDDSHV10	Yes	6	PU/PD	LVCMOS
		spi0_cs2	0x1	IO								
		timer7	0x2	IO								
		qspi_d1	0x3	I								
		gpio2_3	0x7	IO								
A2	gpmc_wait0	gpmc_wait0	0x0	I	H	H	Mode7	VDDSHV11	Yes	6	PU/PD	LVCMOS
		gmii2_crs	0x1	I								
		gpmc_csn4	0x2	O								
		rmii2_crs_dv	0x3	I								
		mmc1_sdcd	0x4	I								
		pr1_mii1_crs	0x5	I								
		uart4_rxd	0x6	I								
		gpio0_30	0x7	IO								
		gpio5_30	0x9	IO								
D10	gpmc_wen	gpmc_wen	0x0	O	H	H	Mode7	VDDSHV10	Yes	6	PU/PD	LVCMOS
		spi1_cs2	0x1	IO								
		timer6	0x2	IO								
		qspi_d2	0x3	I								
		gpio2_4	0x7	IO								
B3	gpmc_wpn	gpmc_wpn	0x0	O	H	H	Mode7	VDDSHV11	Yes	6	PU/PD	LVCMOS
		gmii2_rxer	0x1	I								
		gpmc_csn5	0x2	O								
		rmii2_rxer	0x3	I								
		mmc2_sdcd	0x4	I								
		pr1_mii1_rxer	0x5	I								
		uart4_txd	0x6	O								
		gpio0_31	0x7	IO								
		gpio5_31	0x9	IO								

Copyright © 2014–2019, Texas Instruments Incorporated

Table 4-10. Pin Attributes (ZDN Package) (continued)

BALL NUMBER [1]	PIN NAME [2]	SIGNAL NAME [3]	MODE [4]	TYPE [5]	BALL RESET STATE [6]	BALL RESET REL. STATE [7]	BALL RESET REL. MODE [8]	POWER [9]	HYS [10]	BUFFER STRENGTH (mA) [11]	PULL UP/DOWN TYPE [12]	IO CELL [13]
Y22	I2C0_SCL	I2C0_SCL	0x0	IOD	OFF	H	Mode7	VDDSHV3	Yes	6	PU/PD	LVCMOS
		timer7	0x1	IO								
		uart2_rtsn	0x2	O								
		eCAP1_in_PWM1_out	0x3	IO								
		gpio3_6	0x7	IO								
AB24	I2C0_SDA	I2C0_SDA	0x0	IOD	OFF	H	Mode7	VDDSHV3	Yes	6	PU/PD	LVCMOS
		timer4	0x1	IO								
		uart2_ctsn	0x2	IO								
		eCAP2_in_PWM2_out	0x3	IO								
		gpio3_5	0x7	IO								
L23	mcasp0_aclkr	mcasp0_aclkr	0x0	IO	OFF	L	Mode7	VDDSHV3	Yes	6	PU/PD	LVCMOS
		eQEP0A_in	0x1	I								
		mcasp0_axr2	0x2	IO								
		mcasp1_aclkx	0x3	IO								
		mmc0_sdwp	0x4	I								
		pr0_pru0_gpo4	0x5	O								
		pr0_pru0_gpi4	0x6	I								
		gpio3_18	0x7	IO								
		gpio0_18	0x9	IO								
N24	mcasp0_aclkx	mcasp0_aclkx	0x0	IO	OFF	L	Mode7	VDDSHV3	Yes	6	PU/PD	LVCMOS
		ehrpwm0A	0x1	O								
		spi0_cs3	0x2	IO								
		spi1_sclk	0x3	IO								
		mmc0_sdcd	0x4	I								
		pr0_pru0_gpo0	0x5	O								
		pr0_pru0_gpi0	0x6	I								
		gpio3_14	0x7	IO								
M24	mcasp0_ahclkr	mcasp0_ahclkr	0x0	IO	OFF	L	Mode7	VDDSHV3	Yes	6	PU/PD	LVCMOS
		ehrpwm0_synci	0x1	I								
		mcasp0_axr2	0x2	IO								
		spi1_cs0	0x3	IO								
		eCAP2_in_PWM2_out	0x4	IO								
		pr0_pru0_gpo3	0x5	O								
		pr0_pru0_gpi3	0x6	I								
		gpio3_17	0x7	IO								

Copyright © 2014–2019, Texas Instruments Incorporated

Table 4-10. Pin Attributes (ZDN Package) (continued)

BALL NUMBER [1]	PIN NAME [2]	SIGNAL NAME [3]	MODE [4]	TYPE [5]	BALL RESET STATE [6]	BALL RESET REL. STATE [7]	BALL RESET REL. MODE [8]	POWER [9]	HYS [10]	BUFFER STRENGTH (mA) [11]	PULL UP/DOWN TYPE [12]	IO CELL [13]
L24	mcasp0_ahclkx	mcasp0_ahclkx	0x0	IO	OFF	L	Mode7	VDDSHV3	Yes	6	PU/PD	LVCMOS
		eQEP0_strobe	0x1	IO								
		mcasp0_axr3	0x2	IO								
		mcasp1_axr1	0x3	IO								
		EMU4	0x4	IO								
		pr0_pru0_gpo7	0x5	O								
		pr0_pru0_gpi7	0x6	I								
		gpio3_21	0x7	IO								
		gpio0_3	0x9	IO								
K23	mcasp0_fsr	mcasp0_fsr	0x0	IO	OFF	L	Mode7	VDDSHV3	Yes	6	PU/PD	LVCMOS
		eQEP0B_in	0x1	I								
		mcasp0_axr3	0x2	IO								
		mcasp1_fsx	0x3	IO								
		EMU2	0x4	IO								
		pr0_pru0_gpo5	0x5	O								
		pr0_pru0_gpi5	0x6	I								
		gpio3_19	0x7	IO								
		gpio0_19	0x9	IO								
N22	mcasp0_fsx	mcasp0_fsx	0x0	IO	OFF	L	Mode7	VDDSHV3	Yes	6	PU/PD	LVCMOS
		ehrpwm0B	0x1	O								
		spi1_cs2	0x2	IO								
		spi1_d0	0x3	IO								
		mmc1_sdcd	0x4	I								
		pr0_pru0_gpo1	0x5	O								
		pr0_pru0_gpi1	0x6	I								
		gpio3_15	0x7	IO								
H23	mcasp0_axr0	mcasp0_axr0	0x0	IO	OFF	L	Mode7	VDDSHV3	Yes	6	PU/PD	LVCMOS
		ehrpwm0_tripzone_input	0x1	I								
		spi1_cs3	0x2	IO								
		spi1_d1	0x3	IO								
		mmc2_sdcd	0x4	I								
		pr0_pru0_gpo2	0x5	O								
		pr0_pru0_gpi2	0x6	I								
		gpio3_16	0x7	IO								

Copyright © 2014–2019, Texas Instruments Incorporated

Table 4-10. Pin Attributes (ZDN Package) (continued)

BALL NUMBER [1]	PIN NAME [2]	SIGNAL NAME [3]	MODE [4]	TYPE [5]	BALL RESET STATE [6]	BALL RESET REL. STATE [7]	BALL RESET REL. MODE [8]	POWER [9]	HYS [10]	BUFFER STRENGTH (mA) [11]	PULL UP/DOWN TYPE [12]	IO CELL [13]
M25	mcasp0_axr1	mcasp0_axr1	0x0	IO	OFF	L	Mode7	VDDSHV3	Yes	6	PU/PD	LVCMOS
		eQEP0_index	0x1	IO								
		mcasp1_axr0	0x3	IO								
		EMU3	0x4	IO								
		pr0_pru0_gpo6	0x5	O								
		pr0_pru0_gpi6	0x6	I								
		gpio3_20	0x7	IO								
		gpio0_2	0x9	IO								
B17	mdio_clk	mdio_clk	0x0	O	H	H	Mode7	VDDSHV7	Yes	6	PU/PD	LVCMOS
		timer5	0x1	IO								
		uart5_txd	0x2	O								
		uart3_rtsn	0x3	O								
		mmc0_sdwp	0x4	I								
		mmc1_clk	0x5	IO								
		mmc2_clk	0x6	IO								
		gpio0_1	0x7	IO								
		pr1_mdio_mdclk	0x8	O								
A17	mdio_data	mdio_data	0x0	IO	H	H	Mode7	VDDSHV7	Yes	6	PU/PD	LVCMOS
		timer6	0x1	IO								
		uart5_rxd	0x2	I								
		uart3_ctsn	0x3	IO								
		mmc0_sdcd	0x4	I								
		mmc1_cmd	0x5	IO								
		mmc2_cmd	0x6	IO								
		gpio0_0	0x7	IO								
		pr1_mdio_data	0x8	IO								
D16	mii1_col	gmii1_col	0x0	I	L	L	Mode7	VDDSHV8	Yes	6	PU/PD	LVCMOS
		rmii2_refclk	0x1	IO								
		spi1_sclk	0x2	IO								
		uart5_rxd	0x3	I								
		mcasp1_axr2	0x4	IO								
		mmc2_dat3	0x5	IO								
		mcasp0_axr2	0x6	IO								
		gpio3_0	0x7	IO								
		gpio0_0	0x9	IO								

Table 4-10. Pin Attributes (ZDN Package) (continued)

BALL NUMBER [1]	PIN NAME [2]	SIGNAL NAME [3]	MODE [4]	TYPE [5]	BALL RESET STATE [6]	BALL RESET REL. STATE [7]	BALL RESET REL. MODE [8]	POWER [9]	HYS [10]	BUFFER STRENGTH (mA) [11]	PULL UP/DOWN TYPE [12]	IO CELL [13]
B14	mii1_crs	gmii1_crs	0x0	I	L	L	Mode7	VDDSHV8	Yes	6	PU/PD	LVCMOS
		rmii1_crs_dv	0x1	I								
		spi1_d0	0x2	IO								
		I2C1_SDA	0x3	IOD								
		mcasp1_aclkx	0x4	IO								
		uart5_ctsn	0x5	I								
		uart2_rxd	0x6	IO								
		gpio3_1	0x7	IO								
D13	mii1_rx_clk	gmii1_rxclk	0x0	I	L	L	Mode7	VDDSHV8	Yes	6	PU/PD	LVCMOS
		uart2_txd	0x1	IO								
		rgmii1_rclk	0x2	I								
		mmc0_dat6	0x3	IO								
		mmc1_dat1	0x4	IO								
		uart1_dsrn	0x5	I								
		mcasp0_fsx	0x6	IO								
		gpio3_10	0x7	IO								
		gpio0_9	0x9	IO								
A15	mii1_rx_dv	gmii1_rxdv	0x0	I	L	L	Mode7	VDDSHV8	Yes	6	PU/PD	LVCMOS
		rgmii1_rctl	0x2	I								
		uart5_txd	0x3	O								
		mcasp1_aclkx	0x4	IO								
		mmc2_dat0	0x5	IO								
		mcasp0_aclkr	0x6	IO								
		gpio3_4	0x7	IO								
		gpio0_1	0x9	IO								
B13	mii1_rx_er	gmii1_rxer	0x0	I	L	L	Mode7	VDDSHV8	Yes	6	PU/PD	LVCMOS
		rmii1_rxer	0x1	I								
		spi1_d1	0x2	IO								
		I2C1_SCL	0x3	IOD								
		mcasp1_fsx	0x4	IO								
		uart5_rtsn	0x5	O								
		uart2_txd	0x6	IO								
		gpio3_2	0x7	IO								

Copyright © 2014–2019, Texas Instruments Incorporated

Table 4-10. Pin Attributes (ZDN Package) (continued)

BALL NUMBER [1]	PIN NAME [2]	SIGNAL NAME [3]	MODE [4]	TYPE [5]	BALL RESET STATE [6]	BALL RESET REL. STATE [7]	BALL RESET REL. MODE [8]	POWER [9]	HYS [10]	BUFFER STRENGTH (mA) [11]	PULL UP/DOWN TYPE [12]	IO CELL [13]
D14	mii1_tx_clk	gmii1_txclk	0x0	I	L	L	Mode7	VDDSHV8	Yes	6	PU/PD	LVCMOS
		uart2_rxd	0x1	IO								
		rgmii1_tclk	0x2	O								
		mmc0_dat7	0x3	IO								
		mmc1_dat0	0x4	IO								
		uart1_dcdn	0x5	I								
		mcasp0_aclkx	0x6	IO								
		gpio3_9	0x7	IO								
		gpio0_8	0x9	IO								
A13	mii1_tx_en	gmii1_txen	0x0	O	L	L	Mode7	VDDSHV8	Yes	6	PU/PD	LVCMOS
		rmii1_txen	0x1	O								
		rgmii1_tctl	0x2	O								
		timer4	0x3	IO								
		mcasp1_axr0	0x4	IO								
		eQEP0_index	0x5	IO								
		mmc2_cmd	0x6	IO								
		gpio3_3	0x7	IO								
F17	mii1_rxd0	gmii1_rxd0	0x0	I	L	L	Mode7	VDDSHV8	Yes	6	PU/PD	LVCMOS
		rmii1_rxd0	0x1	I								
		rgmii1_rd0	0x2	I								
		mcasp1_ahclkx	0x3	IO								
		mcasp1_ahclkr	0x4	IO								
		mcasp1_aclkr	0x5	IO								
		mcasp0_axr3	0x6	IO								
		gpio2_21	0x7	IO								
B16	mii1_rxd1	gmii1_rxd1	0x0	I	L	L	Mode7	VDDSHV8	Yes	6	PU/PD	LVCMOS
		rmii1_rxd1	0x1	I								
		rgmii1_rd1	0x2	I								
		mcasp1_axr3	0x3	IO								
		mcasp1_fsr	0x4	IO								
		eQEP0_strobe	0x5	IO								
		mmc2_clk	0x6	IO								
		gpio2_20	0x7	IO								

Copyright © 2014–2019, Texas Instruments Incorporated

Table 4-10. Pin Attributes (ZDN Package) (continued)

BALL NUMBER [1]	PIN NAME [2]	SIGNAL NAME [3]	MODE [4]	TYPE [5]	BALL RESET STATE [6]	BALL RESET REL. STATE [7]	BALL RESET REL. MODE [8]	POWER [9]	HYS [10]	BUFFER STRENGTH (mA) [11]	PULL UP/DOWN TYPE [12]	IO CELL [13]
E16	mii1_rxd2	gmii1_rxd2	0x0	I	L	L	Mode7	VDDSHV8	Yes	6	PU/PD	LVCMOS
		uart3_txd	0x1	IO								
		rgmii1_rd2	0x2	I								
		mmc0_dat4	0x3	IO								
		mmc1_dat3	0x4	IO								
		uart1_rin	0x5	I								
		mcasp0_axr1	0x6	IO								
		gpio2_19	0x7	IO								
		gpio0_11	0x9	IO								
C14	mii1_rxd3	gmii1_rxd3	0x0	I	L	L	Mode7	VDDSHV8	Yes	6	PU/PD	LVCMOS
		uart3_rxd	0x1	IO								
		rgmii1_rd3	0x2	I								
		mmc0_dat5	0x3	IO								
		mmc1_dat2	0x4	IO								
		uart1_dtrn	0x5	O								
		mcasp0_axr0	0x6	IO								
		gpio2_18	0x7	IO								
		gpio0_10	0x9	IO								
B15	mii1_txd0	gmii1_txd0	0x0	O	L	L	Mode7	VDDSHV8	Yes	6	PU/PD	LVCMOS
		rmii1_txd0	0x1	O								
		rgmii1_td0	0x2	O								
		mcasp1_axr2	0x3	IO								
		mcasp1_aclkr	0x4	IO								
		eQEP0B_in	0x5	I								
		mmc1_clk	0x6	IO								
		gpio0_28	0x7	IO								
A14	mii1_txd1	gmii1_txd1	0x0	O	L	L	Mode7	VDDSHV8	Yes	6	PU/PD	LVCMOS
		rmii1_txd1	0x1	O								
		rgmii1_td1	0x2	O								
		mcasp1_fsr	0x3	IO								
		mcasp1_axr1	0x4	IO								
		eQEP0A_in	0x5	I								
		mmc1_cmd	0x6	IO								
		gpio0_21	0x7	IO								

Copyright © 2014–2019, Texas Instruments Incorporated

Table 4-10. Pin Attributes (ZDN Package) (continued)

BALL NUMBER [1]	PIN NAME [2]	SIGNAL NAME [3]	MODE [4]	TYPE [5]	BALL RESET STATE [6]	BALL RESET REL. STATE [7]	BALL RESET REL. MODE [8]	POWER [9]	HYS [10]	BUFFER STRENGTH (mA) [11]	PULL UP/DOWN TYPE [12]	IO CELL [13]
C13	mii1_txd2	gmii1_txd2	0x0	O	L	L	Mode7	VDDSHV8	Yes	6	PU/PD	LVCMOS
		dcan0_rx	0x1	I								
		rgmii1_td2	0x2	O								
		uart4_txd	0x3	O								
		mcasp1_axr0	0x4	IO								
		mmc2_dat2	0x5	IO								
		mcasp0_ahclkx	0x6	IO								
		gpio0_17	0x7	IO								
		gpio3_12	0x9	IO								
C16	mii1_txd3	gmii1_txd3	0x0	O	L	L	Mode7	VDDSHV8	Yes	6	PU/PD	LVCMOS
		dcan0_tx	0x1	O								
		rgmii1_td3	0x2	O								
		uart4_rxd	0x3	I								
		mcasp1_fsx	0x4	IO								
		mmc2_dat1	0x5	IO								
		mcasp0_fsr	0x6	IO								
		gpio0_16	0x7	IO								
		gpio3_11	0x9	IO								
D1	mmc0_clk	mmc0_clk	0x0	IO	OFF	OFF	Mode7	VDDSHV1	Yes	6	PU/PD	LVCMOS
		gpmc_a24	0x1	O								
		uart3_ctsn	0x2	IO								
		uart2_rxd	0x3	IO								
		dcan1_tx	0x4	O								
		pr0_pru0_gpo12	0x5	O								
		pr0_pru0_gpi12	0x6	I								
		gpio2_30	0x7	IO								
D2	mmc0_cmd	mmc0_cmd	0x0	IO	OFF	OFF	Mode7	VDDSHV1	Yes	6	PU/PD	LVCMOS
		gpmc_a25	0x1	O								
		uart3_rtsn	0x2	O								
		uart2_txd	0x3	IO								
		dcan1_rx	0x4	I								
		pr0_pru0_gpo13	0x5	O								
		pr0_pru0_gpi13	0x6	I								
		gpio2_31	0x7	IO								

Table 4-10. Pin Attributes (ZDN Package) (continued)

BALL NUMBER [1]	PIN NAME [2]	SIGNAL NAME [3]	MODE [4]	TYPE [5]	BALL RESET STATE [6]	BALL RESET REL. STATE [7]	BALL RESET REL. MODE [8]	POWER [9]	HYS [10]	BUFFER STRENGTH (mA) [11]	PULL UP/DOWN TYPE [12]	IO CELL [13]
C1	mmc0_dat0	mmc0_dat0	0x0	IO	OFF	OFF	Mode7	VDDSHV1	Yes	6	PU/PD	LVCMOS
		gpmc_a23	0x1	O								
		uart5_rtsn	0x2	O								
		uart3_txd	0x3	IO								
		uart1_rin	0x4	I								
		pr0_pru0_gpo11	0x5	O								
		pr0_pru0_gpi11	0x6	I								
		gpio2_29	0x7	IO								
C2	mmc0_dat1	mmc0_dat1	0x0	IO	OFF	OFF	Mode7	VDDSHV1	Yes	6	PU/PD	LVCMOS
		gpmc_a22	0x1	O								
		uart5_ctsn	0x2	I								
		uart3_rxd	0x3	IO								
		uart1_dtrn	0x4	O								
		pr0_pru0_gpo10	0x5	O								
		pr0_pru0_gpi10	0x6	I								
		gpio2_28	0x7	IO								
B2	mmc0_dat2	mmc0_dat2	0x0	IO	OFF	OFF	Mode7	VDDSHV1	Yes	6	PU/PD	LVCMOS
		gpmc_a21	0x1	O								
		uart4_rtsn	0x2	O								
		timer6	0x3	IO								
		uart1_dsrn	0x4	I								
		pr0_pru0_gpo9	0x5	O								
		pr0_pru0_gpi9	0x6	I								
		gpio2_27	0x7	IO								
B1	mmc0_dat3	mmc0_dat3	0x0	IO	OFF	OFF	Mode7	VDDSHV1	Yes	6	PU/PD	LVCMOS
		gpmc_a20	0x1	O								
		uart4_ctsn	0x2	I								
		timer5	0x3	IO								
		uart1_dcdn	0x4	I								
		pr0_pru0_gpo8	0x5	O								
		pr0_pru0_gpi8	0x6	I								
		gpio2_26	0x7	IO								
Y25	nTRST	nTRST	0x0	I	L	L	Mode0	VDDSHV3	Yes	NA	PU/PD	LVCMOS
Y23	PWRONRSTn	porz	0x0	I	Z	Z	Mode0	VDDSHV3 (18)	Yes	NA	NA	LVCMOS

Copyright © 2014–2019, Texas Instruments Incorporated

Table 4-10. Pin Attributes (ZDN Package) (continued)

BALL NUMBER [1]	PIN NAME [2]	SIGNAL NAME [3]	MODE [4]	TYPE [5]	BALL RESET STATE [6]	BALL RESET REL. STATE [7]	BALL RESET REL. MODE [8]	POWER [9]	HYS [10]	BUFFER STRENGTH (mA) [11]	PULL UP/DOWN TYPE [12]	IO CELL [13]
AA10, AA7, AA9, AB10, AB6, AB7, AB9, AC10, AC12, AC5, AC6, AC7, AC9, AD1, AD10, AD11, AD2, AD7, AE11, AE12, AE9, H19, H21, W10, Y10, Y6, Y7	Reserved	Reserved (9)	NA	NA	NA	NA	NA	NA	NA	NA	NA	NA
A16	rmii1_ref_clk	rmii1_refclk	0x0	IO	L	L	Mode7	VDDSHV8	Yes	6	PU/PD	LVCMOS
		xdma_event_intr2	0x1	I								
		spi1_cs0	0x2	IO								
		uart5_txd	0x3	O								
		mcasp1_axr3	0x4	IO								
		mmc0_pow	0x5	O								
		mcasp1_ahclkx	0x6	IO								
		gpio0_29	0x7	IO								
AE2	RTC_KALDO_ENn	RTC_KALDO_ENn	0x0	I	Z	Z	Mode0	VDDS_RTC	NA	NA	NA	Analog
AD6	RTC_PMIC_EN	RTC_PMIC_EN	0x0	O	H	1	Mode0	VDDS_RTC	NA	6	NA	LVCMOS
AE6	RTC_PWRONRSTn	RTC_PORz	0x0	I	Z	Z	Mode0	VDDS_RTC	Yes	NA	NA	LVCMOS
AE3	RTC_WAKEUP	RTC_WAKEUP	0x0	I	L	Z	Mode0	VDDS_RTC	Yes	NA	NA	LVCMOS
AE5	RTC_XTALIN	OSC1_IN	0x0	I	H	H	Mode0	VDDS_RTC	Yes	NA	PU (2)	LVCMOS
AE4	RTC_XTALOUT	OSC1_OUT	0x0	O	Z	Z (29)	Mode0	VDDS_RTC	NA	NA (19)	NA	LVCMOS
P23	spi0_sclk	spi0_sclk	0x0	IO	OFF	H	Mode7	VDDSHV3	Yes	6	PU/PD	LVCMOS
		uart2_rxd	0x1	IO								
		I2C2_SDA	0x2	IOD								
		ehrpwm0A	0x3	O								
		pr1_uart0_cts_n	0x4	I								
		pr0_uart0_cts_n	0x5	I								
		EMU2	0x6	IO								
		gpio0_2	0x7	IO								
N20	spi2_sclk	spi2_sclk	0x0	IO	OFF	L	Mode7	VDDSHV3	Yes	6	PU/PD	LVCMOS
		I2C1_SCL	0x1	IOD								
		ehrpwm4_tripzone_input	0x6	I								
		gpio3_24	0x7	IO								
		gpio0_22	0x9	IO								

Table 4-10. Pin Attributes (ZDN Package) (continued)

BALL NUMBER [1]	PIN NAME [2]	SIGNAL NAME [3]	MODE [4]	TYPE [5]	BALL RESET STATE [6]	BALL RESET REL. STATE [7]	BALL RESET REL. MODE [8]	POWER [9]	HYS [10]	BUFFER STRENGTH (mA) [11]	PULL UP/DOWN TYPE [12]	IO CELL [13]
P25	spi4_sclk	spi4_sclk	0x0	IO	OFF	L	Mode7	VDDSHV3	Yes	6	PU/PD	LVCMOS
		ehrpwm0_synci	0x6	I								
		gpio5_4	0x7	IO								
T20	spi0_cs0	spi0_cs0	0x0	IO	OFF	H	Mode7	VDDSHV3	Yes	6	PU/PD	LVCMOS
		mmc2_sdwp	0x1	I								
		I2C1_SCL	0x2	IOD								
		ehrpwm0_synci	0x3	I								
		pr1_uart0_txd	0x4	O								
		pr0_uart0_txd	0x5	O								
		pr1_edio_data_out1	0x6	O								
		gpio0_5	0x7	IO								
		ehrpwm1B	0x8	O								
R25	spi0_cs1	spi0_cs1	0x0	IO	OFF	H	Mode7	VDDSHV3	Yes	6	PU/PD	LVCMOS
		uart3_rxd	0x1	IO								
		eCAP1_in_PWM1_out	0x2	IO								
		mmc0_pow	0x3	O								
		xdma_event_intr2	0x4	I								
		mmc0_sdcd	0x5	I								
		EMU4	0x6	IO								
		gpio0_6	0x7	IO								
		ehrpwm2A	0x8	O								
		timer0	0x9	IO								
T22	spi0_d0	spi0_d0	0x0	IO	OFF	H	Mode7	VDDSHV3	Yes	6	PU/PD	LVCMOS
		uart2_txd	0x1	IO								
		I2C2_SCL	0x2	IOD								
		ehrpwm0B	0x3	O								
		pr1_uart0_rts_n	0x4	O								
		pr0_uart0_rts_n	0x5	O								
		EMU3	0x6	IO								
		gpio0_3	0x7	IO								

Copyright © 2014–2019, Texas Instruments Incorporated

Table 4-10. Pin Attributes (ZDN Package) (continued)

BALL NUMBER [1]	PIN NAME [2]	SIGNAL NAME [3]	MODE [4]	TYPE [5]	BALL RESET STATE [6]	BALL RESET REL. STATE [7]	BALL RESET REL. MODE [8]	POWER [9]	HYS [10]	BUFFER STRENGTH (mA) [11]	PULL UP/DOWN TYPE [12]	IO CELL [13]
T21	spi0_d1	spi0_d1	0x0	IO	OFF	H	Mode7	VDDSHV3	Yes	6	PU/PD	LVCMOS
		mmc1_sdwp	0x1	I								
		I2C1_SDA	0x2	IOD								
		ehrpwm0_tripzone_input	0x3	I								
		pr1_uart0_rxd	0x4	I								
		pr0_uart0_rxd	0x5	I								
		pr1_edio_data_out0	0x6	O								
		gpio0_4	0x7	IO								
		ehrpwm1A	0x8	O								
T23	spi2_cs0	spi2_cs0	0x0	IO	OFF	H	Mode7	VDDSHV3	Yes	6	PU/PD	LVCMOS
		I2C1_SDA	0x1	IOD								
		ehrpwm2_tripzone_input	0x6	I								
		gpio3_25	0x7	IO								
		gpio0_23	0x9	IO								
P22	spi2_d0	spi2_d0	0x0	IO	OFF	L	Mode7	VDDSHV3	Yes	6	PU/PD	LVCMOS
		ehrpwm5_tripzone_input	0x6	I								
		gpio3_22	0x7	IO								
		gpio0_20	0x9	IO								
P20	spi2_d1	spi2_d1	0x0	IO	OFF	H	Mode7	VDDSHV3	Yes	6	PU/PD	LVCMOS
		ehrpwm1_tripzone_input	0x6	I								
		gpio3_23	0x7	IO								
		gpio0_21	0x9	IO								
N25	spi4_cs0	spi4_cs0	0x0	IO	OFF	H	Mode7	VDDSHV3	Yes	6	PU/PD	LVCMOS
		ehrpwm3_tripzone_input	0x6	I								
		gpio5_7	0x7	IO								
R24	spi4_d0	spi4_d0	0x0	IO	OFF	L	Mode7	VDDSHV3	Yes	6	PU/PD	LVCMOS
		ehrpwm3_synci	0x6	I								
		gpio5_5	0x7	IO								
P24	spi4_d1	spi4_d1	0x0	IO	OFF	L	Mode7	VDDSHV3	Yes	6	PU/PD	LVCMOS
		ehrpwm0_tripzone_input	0x6	I								
		gpio5_6	0x7	IO								
AA25	TCK	TCK	0x0	I	H	H	Mode0	VDDSHV3	Yes	NA	PU/PD	LVCMOS
Y20	TDI	TDI	0x0	I	H	H	Mode0	VDDSHV3	Yes	NA	PU/PD	LVCMOS
AA24	TDO	TDO	0x0	O	H	H	Mode0	VDDSHV3	Yes	6	PU/PD	LVCMOS
Y24	TMS	TMS	0x0	I	H	H	Mode0	VDDSHV3	Yes	6	PU/PD	LVCMOS

Copyright © 2014–2019, Texas Instruments Incorporated

Table 4-10. Pin Attributes (ZDN Package) (continued)

BALL NUMBER [1]	PIN NAME [2]	SIGNAL NAME [3]	MODE [4]	TYPE [5]	BALL RESET STATE [6]	BALL RESET REL. STATE [7]	BALL RESET REL. MODE [8]	POWER [9]	HYS [10]	BUFFER STRENGTH (mA) [11]	PULL UP/DOWN TYPE [12]	IO CELL [13]
L25	uart0_ctsn	uart0_ctsn	0x0	I	OFF	H	Mode7	VDDSHV3	Yes	6	PU/PD	LVCMOS
		uart4_rxd	0x1	I								
		dcan1_tx	0x2	O								
		I2C1_SDA	0x3	IOD								
		spi1_d0	0x4	IO								
		timer7	0x5	IO								
		pr1_edc_sync0_out	0x6	O								
		gpio1_8	0x7	IO								
J25	uart0_rtsn	uart0_rtsn	0x0	O	OFF	H	Mode7	VDDSHV3	Yes	6	PU/PD	LVCMOS
		uart4_txd	0x1	O								
		dcan1_rx	0x2	I								
		I2C1_SCL	0x3	IOD								
		spi1_d1	0x4	IO								
		spi1_cs0	0x5	IO								
		pr1_edc_sync1_out	0x6	O								
		gpio1_9	0x7	IO								
K25	uart0_rxd	uart0_rxd	0x0	I	OFF	H	Mode7	VDDSHV3	Yes	6	PU/PD	LVCMOS
		spi1_cs0	0x1	IO								
		dcan0_tx	0x2	O								
		I2C2_SDA	0x3	IOD								
		eCAP2_in_PWM2_out	0x4	IO								
		pr0_pru1_gpo4	0x5	O								
		pr0_pru1_gpi4	0x6	I								
		gpio1_10	0x7	IO								
J24	uart0_txd	uart0_txd	0x0	O	OFF	H	Mode7	VDDSHV3	Yes	6	PU/PD	LVCMOS
		spi1_cs1	0x1	IO								
		dcan0_rx	0x2	I								
		I2C2_SCL	0x3	IOD								
		eCAP1_in_PWM1_out	0x4	IO								
		pr0_pru1_gpo5	0x5	O								
		pr0_pru1_gpi5	0x6	I								
		gpio1_11	0x7	IO								

Copyright © 2014–2019, Texas Instruments Incorporated

Table 4-10. Pin Attributes (ZDN Package) (continued)

BALL NUMBER [1]	PIN NAME [2]	SIGNAL NAME [3]	MODE [4]	TYPE [5]	BALL RESET STATE [6]	BALL RESET REL. STATE [7]	BALL RESET REL. MODE [8]	POWER [9]	HYS [10]	BUFFER STRENGTH (mA) [11]	PULL UP/DOWN TYPE [12]	IO CELL [13]
K22	uart1_ctsn	uart1_ctsn	0x0	IO	OFF	H	Mode7	VDDSHV3	Yes	6	PU/PD	LVCMOS
		timer6	0x1	IO								
		dcan0_tx	0x2	O								
		I2C2_SDA	0x3	IOD								
		spi1_cs0	0x4	IO								
		pr1_uart0_cts_n	0x5	I								
		pr1_edc_latch0_in	0x6	I								
		gpio0_12	0x7	IO								
L22	uart1_rtsn	uart1_rtsn	0x0	O	OFF	H	Mode7	VDDSHV3	Yes	6	PU/PD	LVCMOS
		timer5	0x1	IO								
		dcan0_rx	0x2	I								
		I2C2_SCL	0x3	IOD								
		spi1_cs1	0x4	IO								
		pr1_uart0_rts_n	0x5	O								
		pr1_edc_latch1_in	0x6	I								
		gpio0_13	0x7	IO								
K21	uart1_rxd	uart1_rxd	0x0	IO	OFF	H	Mode7	VDDSHV3	Yes	6	PU/PD	LVCMOS
		mmc1_sdwp	0x1	I								
		dcan1_tx	0x2	O								
		I2C1_SDA	0x3	IOD								
		pr1_uart0_rxd	0x5	I								
		pr1_pru0_gpi16	0x6	I								
		gpio0_14	0x7	IO								
L21	uart1_txd	uart1_txd	0x0	IO	OFF	H	Mode7	VDDSHV3	Yes	6	PU/PD	LVCMOS
		mmc2_sdwp	0x1	I								
		dcan1_rx	0x2	I								
		I2C1_SCL	0x3	IOD								
		pr1_uart0_txd	0x5	O								
		pr1_pru0_gpi16	0x6	I								
		gpio0_15	0x7	IO								
H22	uart3_ctsn	uart3_ctsn	0x0	IO	OFF	H	Mode7	VDDSHV3	Yes	6	PU/PD	LVCMOS
		spi4_cs1	0x2	IO								
		pr0_pru1_gpo18	0x4	O								
		pr0_pru1_gpi18	0x5	I								
		ehrpwm5A	0x6	O								
		gpio5_0	0x7	IO								

Copyright © 2014–2019, Texas Instruments Incorporated

Table 4-10. Pin Attributes (ZDN Package) (continued)

BALL NUMBER [1]	PIN NAME [2]	SIGNAL NAME [3]	MODE [4]	TYPE [5]	BALL RESET STATE [6]	BALL RESET REL. STATE [7]	BALL RESET REL. MODE [8]	POWER [9]	HYS [10]	BUFFER STRENGTH (mA) [11]	PULL UP/DOWN TYPE [12]	IO CELL [13]
K24	uart3_rtsn	uart3_rtsn	0x0	O	OFF	H	Mode7	VDDSHV3	Yes	6	PU/PD	LVCMOS
		hdq_sio	0x1	IOD								
		pr0_pru1_gpo19	0x4	O								
		pr0_pru1_gpi19	0x5	I								
		ehrpwm5B	0x6	O								
		gpio5_1	0x7	IO								
H25	uart3_rxd	uart3_rxd	0x0	IO	OFF	H	Mode7	VDDSHV3	Yes	6	PU/PD	LVCMOS
		pr0_pru0_gpo18	0x4	O								
		pr0_pru0_gpi18	0x5	I								
		ehrpwm4A	0x6	O								
		gpio5_2	0x7	IO								
H24	uart3_txd	uart3_txd	0x0	IO	OFF	H	Mode7	VDDSHV3	Yes	6	PU/PD	LVCMOS
		pr0_pru0_gpo19	0x4	O								
		pr0_pru0_gpi19	0x5	I								
		ehrpwm4B	0x6	O								
		gpio5_3	0x7	IO								
W22	USB0_CE	USB0_CE	0x0	A	Z	Z	Mode0	VDDA3P3V_USB0/VDDA1P8V_USB0	NA	NA	NA	Analog
W24	USB0_DM	USB0_DM	0x0	A	Z	Z	Mode0	VDDA3P3V_USB0/VDDA1P8V_USB0	NA (20)	8 (20)	NA	Analog
W25	USB0_DP	USB0_DP	0x0	A	Z	Z	Mode0	VDDA3P3V_USB0/VDDA1P8V_USB0	NA (20)	8 (20)	NA	Analog
G21	USB0_DRVVBUS	USB0_DRVVBUS	0x0	O	L	L	Mode0	VDDSHV3	Yes	6	PU/PD	LVCMOS
		gpio0_18	0x7	IO								
		gpio5_27	0x9	IO								
U24	USB0_ID	USB0_ID	0x0	A	Z	Z	Mode0	VDDA3P3V_USB0/VDDA1P8V_USB0	NA	NA	NA	Analog
U23	USB0_VBUS	USB0_VBUS	0x0	A	Z	Z	Mode0	VDDA3P3V_USB0/VDDA1P8V_USB0	NA	NA	NA	Analog
U22	USB1_CE	USB1_CE	0x0	A	Z	Z	Mode0	VDDA3P3V_USB1/VDDA1P8V_USB1	NA	NA	NA	Analog
V25	USB1_DM	USB1_DM	0x0	A	Z	Z	Mode0	VDDA3P3V_USB1/VDDA1P8V_USB1	NA (21)	8 (21)	NA	Analog
V24	USB1_DP	USB1_DP	0x0	A	Z	Z	Mode0	VDDA3P3V_USB1/VDDA1P8V_USB1	NA (21)	8 (21)	NA	Analog
F25	USB1_DRVVBUS	USB1_DRVVBUS	0x0	O	L	L	Mode0	VDDSHV3	Yes	6	PU/PD	LVCMOS
		gpio3_13	0x7	IO								
		gpio0_25	0x9	IO								
U25	USB1_ID	USB1_ID	0x0	A	Z	Z	Mode0	VDDA3P3V_USB1/VDDA1P8V_USB1	NA	NA	NA	Analog

Copyright © 2014–2019, Texas Instruments Incorporated

Table 4-10. Pin Attributes (ZDN Package) (continued)

BALL NUMBER [1]	PIN NAME [2]	SIGNAL NAME [3]	MODE [4]	TYPE [5]	BALL RESET STATE [6]	BALL RESET REL. STATE [7]	BALL RESET REL. MODE [8]	POWER [9]	HYS [10]	BUFFER STRENGTH (mA) [11]	PULL UP/DOWN TYPE [12]	IO CELL [13]
T25	USB1_VBUS	USB1_VBUS	0x0	A	Z	Z	Mode0	VDDA3P3V_USB1/VDDA1P8V_USB1	NA	NA	NA	Analog
W21	VDDA1P8V_USB0	VDDA1P8V_USB0	NA	POWER	NA	NA	NA	NA	NA	NA	NA	NA
U21	VDDA1P8V_USB1	VDDA1P8V_USB1	NA	POWER	NA	NA	NA	NA	NA	NA	NA	NA
W20	VDDA3P3V_USB0	VDDA3P3V_USB0	NA	POWER	NA	NA	NA	NA	NA	NA	NA	NA
U20	VDDA3P3V_USB1	VDDA3P3V_USB1	NA	POWER	NA	NA	NA	NA	NA	NA	NA	NA
AB12	VDDA_ADC0	VDDA_ADC0	NA	POWER	NA	NA	NA	NA	NA	NA	NA	NA
Y16	VDDA_ADC1	VDDA_ADC1	NA	POWER	NA	NA	NA	NA	NA	NA	NA	NA
AD12, AD8, F20, G6, H12, P19, W15, Y19	VDDS	VDDS (1)	NA	POWER	NA	NA	NA	NA	NA	NA	NA	NA
F8	VDDS3P3V_IOLDO	VDDS3P3V_IOLDO	NA	POWER	NA	NA	NA	NA	NA	NA	NA	NA
J7, J8	VDDSHV1	VDDSHV1	NA	POWER	NA	NA	NA	NA	NA	NA	NA	NA
V16, V17, W16	VDDSHV2	VDDSHV2	NA	POWER	NA	NA	NA	NA	NA	NA	NA	NA
J18, K17, K18, N18, N19, P18, W18	VDDSHV3	VDDSHV3	NA	POWER	NA	NA	NA	NA	NA	NA	NA	NA
F22	VDDSHV5	VDDSHV5	NA	POWER	NA	NA	NA	NA	NA	NA	NA	NA
G16, G17, H17	VDDSHV6	VDDSHV6	NA	POWER	NA	NA	NA	NA	NA	NA	NA	NA
F16	VDDSHV7	VDDSHV7	NA	POWER	NA	NA	NA	NA	NA	NA	NA	NA
G13, G14	VDDSHV8	VDDSHV8	NA	POWER	NA	NA	NA	NA	NA	NA	NA	NA
G11, H11	VDDSHV9	VDDSHV9	NA	POWER	NA	NA	NA	NA	NA	NA	NA	NA
G10, H10	VDDSHV10	VDDSHV10	NA	POWER	NA	NA	NA	NA	NA	NA	NA	NA
H8, H9	VDDSHV11	VDDSHV11	NA	POWER	NA	NA	NA	NA	NA	NA	NA	NA
E23	VDDS_CLKOUT	VDDS_CLKOUT	NA	POWER	NA	NA	NA	NA	NA	NA	NA	NA
K7, K8, M7, M8, N7, N8, R6, R7, R8, T7, T8, V7, V8	VDDS_DDR	VDDS_DDR	NA	POWER	NA	NA	NA	NA	NA	NA	NA	NA
C23	VDDS_OSC	VDDS_OSC	NA	POWER	NA	NA	NA	NA	NA	NA	NA	NA
N21	VDDS_PLL_CORE_LCD	VDDS_PLL_CORE_LCD	NA	POWER	NA	NA	NA	NA	NA	NA	NA	NA
G5	VDDS_PLL_DDR	VDDS_PLL_DDR	NA	POWER	NA	NA	NA	NA	NA	NA	NA	NA
E17	VDDS_PLL_MPU	VDDS_PLL_MPU	NA	POWER	NA	NA	NA	NA	NA	NA	NA	NA
AD5	VDDS_RTC	VDDS_RTC	NA	POWER	NA	NA	NA	NA	NA	NA	NA	NA
F13	VDDS_SRAM_CORE_BG	VDDS_SRAM_CORE_BG	NA	POWER	NA	NA	NA	NA	NA	NA	NA	NA
F14	VDDS_SRAM_MPU_BB	VDDS_SRAM_MPU_BB	NA	POWER	NA	NA	NA	NA	NA	NA	NA	NA

Copyright © 2014–2019, Texas Instruments Incorporated

Table 4-10. Pin Attributes (ZDN Package) (continued)

BALL NUMBER [1]	PIN NAME [2]	SIGNAL NAME [3]	MODE [4]	TYPE [5]	BALL RESET STATE [6]	BALL RESET REL. STATE [7]	BALL RESET REL. MODE [8]	POWER [9]	HYS [10]	BUFFER STRENGTH (mA) [11]	PULL UP/DOWN TYPE [12]	IO CELL [13]
AD9, J10, J11, L12, L14, M12, M14, M9, N16, N17, N9, P16, P17, R11, R14, R9, T11, T14, T18, T19, T9, U15, V15, W12, W13	VDD_CORE	VDD_CORE (15)	NA	POWER	NA	NA	NA	NA	NA	NA	NA	NA
H13, H14, H16, J13, J14, J16, K19, K20, L19, L20, M17, M18	VDD_MPU	VDD_MPU	NA	POWER	NA	NA	NA	NA	NA	NA	NA	NA
D20	vdd_mpu_mon	vdd_mpu_mon (30)	NA	POWER	NA	NA	NA	NA	NA	NA	NA	NA
P21	VPP	VPP (23)	NA	POWER	NA	NA	NA	NA	NA	NA	NA	NA
A1, A25, AA23, AE1, AE10, AE25, AE7, AE8, H15, H18, J12, J15, J17, J9, K11, K12, K14, K15, K9, L11, L15, L17, L18, L8, L9, M10, M11, M13, M15, M16, N10, N11, N12, N13, N14, N15, P10, P11, P12, P13, P14, P15, P8, P9, R12, R15, R17, R18, T12, T15, T17, U10, U11, U12, U13, U14, U16, U17, U18, U19, U8, U9, V10, V11, V12, V13, V14, V18, V9	VSS	VSS (16)	NA	GROUND	NA	NA	NA	NA	NA	NA	NA	NA
AC15	VSSA_ADC	VSSA_ADC	NA	GROUND	NA	NA	NA	NA	NA	NA	NA	NA
W23	VSSA_USB	VSSA_USB	NA	GROUND	NA	NA	NA	NA	NA	NA	NA	NA
B24	VSS_OSC	VSS_OSC (31)	NA	GROUND	NA	NA	NA	NA	NA	NA	NA	NA
AD4	VSS_RTC	VSS_RTC (32)	NA	GROUND	NA	NA	NA	NA	NA	NA	NA	NA
G22	WARMRSTn	nRESETIN_OUT	0x0	IOD (12)	OFF	H (22)	Mode0	VDDSHV3	Yes	6	PU/PD	LVCMOS

Copyright © 2014–2019, Texas Instruments Incorporated

Table 4-10. Pin Attributes (ZDN Package) (continued)

BALL NUMBER [1]	PIN NAME [2]	SIGNAL NAME [3]	MODE [4]	TYPE [5]	BALL RESET STATE [6]	BALL RESET REL. STATE [7]	BALL RESET REL. MODE [8]	POWER [9]	HYS [10]	BUFFER STRENGTH (mA) [11]	PULL UP/DOWN TYPE [12]	IO CELL [13]
D24	xdma_event_intr0	xdma_event_intr0	0x0	I	OFF	L (10)	Mode7 (13)	VDDSHV5	Yes	6	PU/PD	LVCMOS
		ext_hw_trigger	0x1	I								
		timer4	0x2	IO								
		clkout1	0x3	O								
		spi1_cs1	0x4	IO								
		pr1_pru0_gpi16	0x5	I								
		EMU2	0x6	IO								
		gpio0_19	0x7	IO								
		pr1_mdio_data	0x8	IO								
		gpio5_28	0x9	IO								
C24	xdma_event_intr1	xdma_event_intr1	0x0	I	OFF	L (11)	Mode7 (14)	VDDSHV5	Yes	6	PU/PD	LVCMOS
		spi0_cs2	0x1	IO								
		tclkin	0x2	I								
		clkout2	0x3	O								
		timer7	0x4	IO								
		pr1_pru0_gpi16	0x5	I								
		EMU3	0x6	IO								
		gpio0_20	0x7	IO								
		pr1_mdio_mdclk	0x8	O								
		gpio5_29	0x9	IO								
C25	XTALIN	OSC0_IN	0x0 (3)	I	Z	Z	Mode0	VDDS_OSC	Yes	NA	PD	LVCMOS
B25	XTALOUT	OSC0_OUT	0x0	O	Z	Z	Mode0	VDDS_OSC	NA	NA (19)	NA	LVCMOS

(1) AD12 and AD8 are not connected to VDDS in the device, but they are required to be connected to 1.8V VDDS on the board

(2) An internal 10 kohm pull up is turned on when the oscillator is disabled. The oscillator is disabled by default after power is applied.

(3) An internal 15 kohm pull down is turned on when the oscillator is disabled. The oscillator is enabled by default after power is applied.

(4) Buffer strength of 8mA is for 50ohms. Can be programmed to have a drive of 5-12mA. See TRM (Control Module) for details.

(5) DSS_AC_BIAS_EN terminal is SYSBOOT[18] input, latched on the rising edge of PWRONRSTn

(6) DSS_DATA[15:0] terminals are respectively SYSBOOT[15:0] inputs, latched on the rising edge of PWRONRSTn.

(7) DSS_HSYNC terminal is SYSBOOT[17] input, latched on the rising edge of PWRONRSTn.

(8) DSS_VSYNC terminal is SYSBOOT[16] input, latched on the rising edge of PWRONRSTn.

(9) Do not connect any signal, test point, or board trace to reserved signals.

(10) If sysboot[17] is low on the rising edge of PWRONRSTn, this terminal has an internal pull-down turned on after reset is released. If sysboot[17] is high on the rising edge or PWRONRSTn, this terminal will initially be driven low after reset is released then it begins to toggle at the same frequency of the OSC0_IN terminal.

(11) If sysboot[18] is low on the rising edge of PWRONRSTn, this terminal has an internal pull-down turned on after reset is released. If sysboot[18] is high on the rising edge or PWRONRSTn, this terminal will initially be driven low after reset is released then it begins to toggle at either 25MHz or 50MHz, depending on the value of SYSBOOT[5].

(12) Refer to the External Warm Reset section of the Technical Reference Manual for more information related to the operation of this terminal.

Copyright © 2014–2019, Texas Instruments Incorporated

(13) Reset Release Mode = 7 if sysboot[17] is low. Mode = 3 if sysboot[17] is high.

(14) Reset Release Mode = 7 if sysboot[18] is low. Mode = 3 if sysboot[18] is high.

(15) Terminal AD9 is not connected to VDD_CORE in the device, but it is required to be connected to VDD_CORE on the board

(16) Terminals AA23, AE10, AE7, AE8 are not connected to VSS in the device, but they are required to be connected to board ground

(17) The default Pull controls for after reset are set by Control Module Registers (DDR IO Ctrl). Please refer to TRM (Control Module) for details.

(18) The input voltage thresholds for this input are not a function of VDDSHV3. Please refer to the DC Electrical Characteristics section for details related to electrical parameters associated with this input terminal

(19) This output should only be used to source the recommended crystal circuit.

(20) This parameter only applies when this USB PHY terminal is operating in UART2 mode.

(21) This parameter only applies when this USB PHY terminal is operating in UART3 mode.

(22) This pin is configured as Open-drain and hence is expected to have an external Pull-up resistor. However there is also an internal PU resistor by default enabled after reset is deasserted.

(23) This signal is only valid for High Security (AM437xHS) devices. For more details, please refer to the VPP Specification for One-Time Programmable (OTP) eFUSEs section. This signal is reserved for AM437x devices, and thus do not connect any signal, test point, or board trace to this signal for AM437x devices

(24) This terminal is an analog input used to set the switching threshold of the DDR input buffers to (VDDS_DDR / 2).

(25) This terminal is an analog passive signal that connects to an external 49.9 ohm 1%, 20mW reference resistor which is used to calibrate the DDR input/output buffers.

(26) This terminal is analog input that may also be configured as an open-drain output.

(27) This terminal is analog input that may also be configured as an open-source or open-drain output.

(28) This terminal is analog input that may also be configured as an open-source output.

(29) This terminal is high-Z when the oscillator is disabled. This terminal is driven high if RTC_XTALIN is less than VIL, driven low if RTC_XTALIN is greater than VIH, and driven to a unknown value if RTC_XTALIN is between VIL and VIH when the oscillator is enabled. The oscillator is disabled by default after power is applied.

(30) This terminal provides a Kelvin connection to VDD_MPU. It can be connected to the power supply feedback input to provide remote sensing which compensates for voltage drop in the PCB power distribution network and package. When the Kelvin connection is not used it should be connected to the same power source as VDD_MPU.

(31) This terminal provides a Kelvin ground reference for the external crystal components. If a crystal circuit is connected to the OSC0_IN/OSC0_OUT terminals, the crystal circuit component grounds should be connected to this terminal and also be connected to the PCB ground plane close to this terminal. If an external LVCMOS clock source is connected to the OSC0_IN terminal, this terminal should be connected to VSS.

(32) This terminal provides a Kelvin ground reference for the external crystal components. If a crystal circuit is connected to the OSC1_IN/OSC1_OUT terminals, the crystal circuit component grounds should be connected to this terminal and also should be connected to the PCB ground plane close to this terminal. If an external LVCMOS clock source is connected to the OSC1_IN terminal, this terminal should be connected to VSS

Copyright © 2014–2019, Texas Instruments Incorporated

4.3 Signal Descriptions

The device contains many peripheral interfaces. In order to reduce package size and lower overall system cost while maintaining maximum functionality, many of the terminals can multiplex up to eight signal functions. Although there are many combinations of pin multiplexing that are possible, only a certain number of sets, called IO Sets, are valid due to timing limitations. These valid IO Sets were carefully chosen to provide many possible application scenarios for the user.

TI has developed a Windows-based application called Pin Mux Utility that helps a system designer select the appropriate pin-multiplexing configuration for their device-based product design. The Pin Mux Utility provides a way to select valid IO Sets of specific peripheral interfaces to ensure the pin-multiplexing configuration selected for a design only uses valid IO Sets supported by the device.

(1) **SIGNAL NAME:** The signal name

(2) **DESCRIPTION:** Description of the signal.

(3) **TYPE:** Ball type for this specific function:

- I = Input
- O = Output
- I/O = Input/Output
- D = Open drain
- DS = Differential
- A = Analog

(4) **BALL:** Package ball location.

4.3.1 ADC Interfaces

Table 4-11. ADC0 Signal Descriptions

SIGNAL NAME [1]	DESCRIPTION [2]	TYPE [3]	ZDN [4]
ADC0_VREFN	Analog Negative Reference Input	AP	AE14
ADC0_VREFP	Analog Positive Reference Input	AP	AD14
ADC0_AIN0	Analog Input/Output	A	AA12
ADC0_AIN1	Analog Input/Output	A	Y12
ADC0_AIN2	Analog Input/Output	A	Y13
ADC0_AIN3	Analog Input/Output	A	AA13
ADC0_AIN4	Analog Input/Output	A	AB13
ADC0_AIN5	Analog Input/Output	A	AC13
ADC0_AIN6	Analog Input/Output	A	AD13
ADC0_AIN7	Analog Input/Output	A	AE13

Table 4-12. ADC0/1 Signal Descriptions

SIGNAL NAME [1]	DESCRIPTION [2]	TYPE [3]	ZDN [4]
ext_hw_trigger	External Hardware Trigger for ADC conversion	I	AC25, D24

Table 4-13. ADC1 Signal Descriptions

SIGNAL NAME [1]	DESCRIPTION [2]	TYPE [3]	ZDN [4]
ADC1_VREFN	Analog Negative Reference Input	AP	AD15
ADC1_VREFP	Analog Positive Reference Input	AP	AE15
ADC1_AIN0	Analog Input/Output	A	AC16
ADC1_AIN1	Analog Input/Output	A	AB16
ADC1_AIN2	Analog Input/Output	A	AA16
ADC1_AIN3	Analog Input/Output	A	AB15
ADC1_AIN4	Analog Input/Output	A	AA15
ADC1_AIN5	Analog Input/Output	A	Y15
ADC1_AIN6	Analog Input/Output	A	AE16

Table 4-13. ADC1 Signal Descriptions (continued)

SIGNAL NAME [1]	DESCRIPTION [2]	TYPE [3]	ZDN [4]
ADC1_AIN7	Analog Input/Output	A	AD16

Copyright © 2014–2019, Texas Instruments Incorporated

4.3.2 CAN Interfaces

Table 4-14. DCAN0 Signal Descriptions

SIGNAL NAME [1]	DESCRIPTION [2]	TYPE [3]	ZDN [4]
dcan0_rx	DCAN0 Receive Data	I	C13, J24, L22
dcan0_tx	DCAN0 Transmit Data	O	C16, K22, K25

Table 4-15. DCAN1 Signal Descriptions

SIGNAL NAME [1]	DESCRIPTION [2]	TYPE [3]	ZDN [4]
dcan1_rx	DCAN1 Receive Data	I	D2, J25, L21
dcan1_tx	DCAN1 Transmit Data	O	D1, K21, L25

4.3.3 Camera (VPFE) Interfaces

Table 4-16. Camera0 Input Signal Descriptions

SIGNAL NAME [1]	DESCRIPTION [2]	TYPE [3]	ZDN [4]
cam0_field	CCD Data Field Indicator	IO	AC18
cam0_hd	CCD Data Horizontal Detect	IO	AE17
cam0_pclk	CCD Data Pixel Clock	I	AC20
cam0_vd	CCD Data Vertical Detect	IO	AD18
cam0_wen	CCD Data Write Enable	I	AD17
cam0_data0	Camera data	I	AE18
cam0_data1	Camera data	I	AB18
cam0_data2	Camera data	I	Y18
cam0_data3	Camera data	I	AA18
cam0_data4	Camera data	I	AE19
cam0_data5	Camera data	I	AD19
cam0_data6	Camera data	I	AE20
cam0_data7	Camera data	I	AD20
cam0_data8	Camera data	I	AB19
cam0_data9	Camera data	I	AA19
cam0_data10	Camera data	I	AC18, AC25
cam0_data11	Camera data	I	AB25, AD17

Table 4-17. Camera1 Input Signal Descriptions

SIGNAL NAME [1]	DESCRIPTION [2]	TYPE [3]	ZDN [4]
cam1_field	CCD Data Field Indicator	IO	AC25
cam1_hd	CCD Data Horizontal Detect	IO	AD25
cam1_pclk	CCD Data Pixel Clock	I	AE21
cam1_vd	CCD Data Vertical Detect	IO	AC23
cam1_wen	CCD Data Write Enable	I	AB25, AE19
cam1_data0	Camera data	I	AB20
cam1_data1	Camera data	I	AC21
cam1_data2	Camera data	I	AD21
cam1_data3	Camera data	I	AE22
cam1_data4	Camera data	I	AD22
cam1_data5	Camera data	I	AE23
cam1_data6	Camera data	I	AD23
cam1_data7	Camera data	I	AE24
cam1_data8	Camera data	I	AB18, AD24
cam1_data9	Camera data	I	AC24, AE18
cam1_data10	Camera data	I	AC18, AC25, Y18
cam1_data11	Camera data	I	AA18, AB25, AD17

Copyright © 2014–2019, Texas Instruments Incorporated

4.3.4 Debug Subsystem Interface

Table 4-18. Debug Subsystem Signal Descriptions

SIGNAL NAME [1]	DESCRIPTION [2]	TYPE [3]	ZDN [4]
EMU0	MISC EMULATION PIN	IO	N23
EMU1	MISC EMULATION PIN	IO	T24
EMU2	MISC EMULATION PIN	IO	AE17, D24, K23, P23
EMU3	MISC EMULATION PIN	IO	AD18, C24, M25, T22
EMU4	MISC EMULATION PIN	IO	AC18, B12, L24, R25
EMU5	MISC EMULATION PIN	IO	AD17
EMU6	MISC EMULATION PIN	IO	AC20
EMU7	MISC EMULATION PIN	IO	AB19
EMU8	MISC EMULATION PIN	IO	AA19
EMU9	MISC EMULATION PIN	IO	AC24
EMU10	MISC EMULATION PIN	IO	AD24, AE17
EMU11	MISC EMULATION PIN	IO	AB25, AD18
nTRST	JTAG TEST RESET (ACTIVE LOW)	I	Y25
TCK	JTAG TEST CLOCK	I	AA25
TDI	JTAG TEST DATA INPUT	I	Y20
TDO	JTAG TEST DATA OUTPUT	O	AA24
TMS	JTAG TEST MODE SELECT	I	Y24

4.3.5 Display Subsystem (DSS) Interface

Table 4-19. Display Subsystem (DSS) Signal Descriptions

SIGNAL NAME [1]	DESCRIPTION [2]	TYPE [3]	ZDN [4]
dss_ac_bias_en	DSS data	O	A24
dss_data0	DSS data	IO	B22
dss_data1	DSS data	IO	A21
dss_data2	DSS data	IO	B21
dss_data3	DSS data	IO	C21
dss_data4	DSS data	IO	A20
dss_data5	DSS data	IO	B20
dss_data6	DSS data	IO	C20
dss_data7	DSS data	IO	E19
dss_data8	DSS data	IO	A19
dss_data9	DSS data	IO	B19
dss_data10	DSS data	IO	A18
dss_data11	DSS data	IO	B18
dss_data12	DSS data	IO	C19
dss_data13	DSS data	IO	D19
dss_data14	DSS data	IO	C17
dss_data15	DSS data	IO	D17
dss_data16	DSS data	O	A11, AC24
dss_data17	DSS data	O	AA19, B11
dss_data18	DSS data	O	AB19, C11
dss_data19	DSS data	O	AC20, E11
dss_data20	DSS data	O	AD17, D11
dss_data21	DSS data	O	AC18, F11
dss_data22	DSS data	O	A10, AD18
dss_data23	DSS data	O	AE17, B10
dss_hsync	DSS Horizontal Sync	O	A23
dss_pclk	DSS Pixel Clock	O	A22
dss_vsync	DSS Vertical Sync	O	B23

Copyright © 2014–2019, Texas Instruments Incorporated

4.3.6 Ethernet (GEMAC_CPSW) Interfaces

Table 4-20. MDIO Signal Descriptions

SIGNAL NAME [1]	DESCRIPTION [2]	TYPE [3]	ZDN [4]
mdio_clk	MDIO Clk	O	B17
mdio_data	MDIO Data	IO	A17

Table 4-21. MII1 Signal Descriptions

SIGNAL NAME [1]	DESCRIPTION [2]	TYPE [3]	ZDN [4]
gmii1_col	MII Colision	I	D16
gmii1_crs	MII Carrier Sense	I	B14
gmii1_rxclk	MII Receive Clock	I	D13
gmii1_rxdv	MII Receive Data Valid	I	A15
gmii1_rxer	MII Receive Data Error	I	B13
gmii1_txclk	MII Transmit Clock	I	D14
gmii1_txen	MII Transmit Enable	O	A13
gmii1_rxd0	MII Receive Data bit 0	I	F17
gmii1_rxd1	MII Receive Data bit 1	I	B16
gmii1_rxd2	MII Receive Data bit 2	I	E16
gmii1_rxd3	MII Receive Data bit 3	I	C14
gmii1_txd0	MII Transmit Data bit 0	O	B15
gmii1_txd1	MII Transmit Data bit 1	O	A14
gmii1_txd2	MII Transmit Data bit 2	O	C13
gmii1_txd3	MII Transmit Data bit 3	O	C16

Table 4-22. MII2 Signal Descriptions

SIGNAL NAME [1]	DESCRIPTION [2]	TYPE [3]	ZDN [4]
gmii2_col	MII Colision	I	A3
gmii2_crs	MII Carrier Sense	I	A2, B12, F10
gmii2_rxclk	MII Receive Clock	I	F6
gmii2_rxdv	MII Receive Data Valid	I	C5
gmii2_rxer	MII Receive Data Error	I	B3
gmii2_txclk	MII Transmit Clock	I	E8
gmii2_txen	MII Transmit Enable	O	C3
gmii2_rxd0	MII Receive Data bit 0	I	D8
gmii2_rxd1	MII Receive Data bit 1	I	G8
gmii2_rxd2	MII Receive Data bit 2	I	B4
gmii2_rxd3	MII Receive Data bit 3	I	F7
gmii2_txd0	MII Transmit Data bit 0	O	E7
gmii2_txd1	MII Transmit Data bit 1	O	D7
gmii2_txd2	MII Transmit Data bit 2	O	A4
gmii2_txd3	MII Transmit Data bit 3	O	C6

Table 4-23. RGMII1 Signal Descriptions

SIGNAL NAME [1]	DESCRIPTION [2]	TYPE [3]	ZDN [4]
rgmii1_rclk	RGMII Receive Clock	I	D13
rgmii1_rctl	RGMII Receive Control	I	A15
rgmii1_tclk	RGMII Transmit Clock	O	D14

Table 4-23. RGMII1 Signal Descriptions (continued)

SIGNAL NAME [1]	DESCRIPTION [2]	TYPE [3]	ZDN [4]
rgmii1_tctl	RGMII Transmit Control	O	A13
rgmii1_rd0	RGMII Receive Data bit 0	I	F17
rgmii1_rd1	RGMII Receive Data bit 1	I	B16
rgmii1_rd2	RGMII Receive Data bit 2	I	E16
rgmii1_rd3	RGMII Receive Data bit 3	I	C14
rgmii1_td0	RGMII Transmit Data bit 0	O	B15
rgmii1_td1	RGMII Transmit Data bit 1	O	A14
rgmii1_td2	RGMII Transmit Data bit 2	O	C13
rgmii1_td3	RGMII Transmit Data bit 3	O	C16

Table 4-24. RGMII2 Signal Descriptions

SIGNAL NAME [1]	DESCRIPTION [2]	TYPE [3]	ZDN [4]
rgmii2_rclk	RGMII Receive Clock	I	F6
rgmii2_rctl	RGMII Receive Control	I	C5
rgmii2_tclk	RGMII Transmit Clock	O	E8
rgmii2_tctl	RGMII Transmit Control	O	C3
rgmii2_rd0	RGMII Receive Data bit 0	I	D8
rgmii2_rd1	RGMII Receive Data bit 1	I	G8
rgmii2_rd2	RGMII Receive Data bit 2	I	B4
rgmii2_rd3	RGMII Receive Data bit 3	I	F7
rgmii2_td0	RGMII Transmit Data bit 0	O	E7
rgmii2_td1	RGMII Transmit Data bit 1	O	D7
rgmii2_td2	RGMII Transmit Data bit 2	O	A4
rgmii2_td3	RGMII Transmit Data bit 3	O	C6

Table 4-25. RMII1 Signal Descriptions

SIGNAL NAME [1]	DESCRIPTION [2]	TYPE [3]	ZDN [4]
rmii1_crs_dv	RMII Carrier Sense / Data Valid	I	B14
rmii1_refclk	RMII Reference Clock	IO	A16
rmii1_rxer	RMII Receive Data Error	I	B13
rmii1_txen	RMII Transmit Enable	O	A13
rmii1_rxd0	RMII Receive Data bit 0	I	F17
rmii1_rxd1	RMII Receive Data bit 1	I	B16
rmii1_txd0	RMII Transmit Data bit 0	O	B15
rmii1_txd1	RMII Transmit Data bit 1	O	A14

Table 4-26. RMII2 Signal Descriptions

SIGNAL NAME [1]	DESCRIPTION [2]	TYPE [3]	ZDN [4]
rmii2_crs_dv	RMII Carrier Sense / Data Valid	I	A2, B12, B4, F10
rmii2_refclk	RMII Reference Clock	IO	D16
rmii2_rxer	RMII Receive Data Error	I	B3
rmii2_txen	RMII Transmit Enable	O	C3
rmii2_rxd0	RMII Receive Data bit 0	I	D8
rmii2_rxd1	RMII Receive Data bit 1	I	G8
rmii2_txd0	RMII Transmit Data bit 0	O	E7
rmii2_txd1	RMII Transmit Data bit 1	O	D7

Copyright © 2014–2019, Texas Instruments Incorporated

4.3.7 External Memory Interfaces

Table 4-27. DDR Signal Descriptions

SIGNAL NAME [1]	DESCRIPTION [2]	TYPE [3]	ZDN [4]
ddr_a0	DDR SDRAM ROW/COLUMN ADDRESS	O	N1
ddr_a1	DDR SDRAM ROW/COLUMN ADDRESS	O	L1
ddr_a2	DDR SDRAM ROW/COLUMN ADDRESS	O	L2
ddr_a3	DDR SDRAM ROW/COLUMN ADDRESS	O	P2
ddr_a4	DDR SDRAM ROW/COLUMN ADDRESS	O	P1
ddr_a5	DDR SDRAM ROW/COLUMN ADDRESS	O	R5
ddr_a6	DDR SDRAM ROW/COLUMN ADDRESS	O	R4
ddr_a7	DDR SDRAM ROW/COLUMN ADDRESS	O	R3
ddr_a8	DDR SDRAM ROW/COLUMN ADDRESS	O	R2
ddr_a9	DDR SDRAM ROW/COLUMN ADDRESS	O	R1
ddr_a10	DDR SDRAM ROW/COLUMN ADDRESS	O	M6
ddr_a11	DDR SDRAM ROW/COLUMN ADDRESS	O	T5
ddr_a12	DDR SDRAM ROW/COLUMN ADDRESS	O	T4
ddr_a13	DDR SDRAM ROW/COLUMN ADDRESS	O	N5
ddr_a14	DDR SDRAM ROW/COLUMN ADDRESS	O	T3
ddr_a15	DDR SDRAM ROW/COLUMN ADDRESS	O	T2
ddr_ba0	DDR SDRAM BANK ADDRESS	O	K1
ddr_ba1	DDR SDRAM BANK ADDRESS	O	K2
ddr_ba2	DDR SDRAM BANK ADDRESS	O	K3
ddr_casn	DDR SDRAM COLUMN ADDRESS STROBE. (ACTIVE LOW)	O	N3
ddr_ck	DDR SDRAM CLOCK (Differential+)	O	M2
ddr_cke0	DDR SDRAM CLOCK ENABLE	O	M3
ddr_cke1	DDR SDRAM CLOCK ENABLE1	O	N6
ddr_csn0	DDR SDRAM CHIP SELECT0	O	M5
ddr_csn1	DDR SDRAM CHIP SELECT1	O	M4
ddr_d0	DDR SDRAM DATA	IO	E3
ddr_d1	DDR SDRAM DATA	IO	E2
ddr_d2	DDR SDRAM DATA	IO	E1
ddr_d3	DDR SDRAM DATA	IO	F3
ddr_d4	DDR SDRAM DATA	IO	G4
ddr_d5	DDR SDRAM DATA	IO	G3
ddr_d6	DDR SDRAM DATA	IO	G2
ddr_d7	DDR SDRAM DATA	IO	G1
ddr_d8	DDR SDRAM DATA	IO	H1
ddr_d9	DDR SDRAM DATA	IO	J6
ddr_d10	DDR SDRAM DATA	IO	J5
ddr_d11	DDR SDRAM DATA	IO	J4
ddr_d12	DDR SDRAM DATA	IO	J3
ddr_d13	DDR SDRAM DATA	IO	K6
ddr_d14	DDR SDRAM DATA	IO	K5
ddr_d15	DDR SDRAM DATA	IO	K4
ddr_d16	DDR SDRAM DATA	IO	V5
ddr_d17	DDR SDRAM DATA	IO	V4
ddr_d18	DDR SDRAM DATA	IO	V3
ddr_d19	DDR SDRAM DATA	IO	V2

Copyright © 2014–2019, Texas Instruments Incorporated

Table 4-27. DDR Signal Descriptions (continued)

SIGNAL NAME [1]	DESCRIPTION [2]	TYPE [3]	ZDN [4]
ddr_d20	DDR SDRAM DATA	IO	V1
ddr_d21	DDR SDRAM DATA	IO	W4
ddr_d22	DDR SDRAM DATA	IO	W5
ddr_d23	DDR SDRAM DATA	IO	W6
ddr_d24	DDR SDRAM DATA	IO	Y2
ddr_d25	DDR SDRAM DATA	IO	Y3
ddr_d26	DDR SDRAM DATA	IO	Y4
ddr_d27	DDR SDRAM DATA	IO	AA3
ddr_d28	DDR SDRAM DATA	IO	AB2
ddr_d29	DDR SDRAM DATA	IO	AB1
ddr_d30	DDR SDRAM DATA	IO	AC1
ddr_d31	DDR SDRAM DATA	IO	AC2
ddr_dqm0	DDR WRITE ENABLE / DATA MASK FOR DATA[7:0]	O	F4
ddr_dqm1	DDR WRITE ENABLE / DATA MASK FOR DATA[15:8]	O	H2
ddr_dqm2	DDR WRITE ENABLE / DATA MASK FOR DATA[23:16]	O	V6
ddr_dqm3	DDR WRITE ENABLE / DATA MASK FOR DATA[31:24]	O	Y1
ddr_dqs0	DDR DATA STROBE FOR DATA[7:0] (Differential+)	IO	F2
ddr_dqs1	DDR DATA STROBE FOR DATA[15:8] (Differential+)	IO	J2
ddr_dqs2	DDR DATA STROBE FOR DATA[23:16] (Differential+)	IO	W1
ddr_dqs3	DDR DATA STROBE FOR DATA[31:24] (Differential+)	IO	AA1
ddr_dqsn0	DDR DATA STROBE FOR DATA[7:0] (Differential-)	IO	F1
ddr_dqsn1	DDR DATA STROBE FOR DATA[15:8] (Differential-)	IO	J1
ddr_dqsn2	DDR DATA STROBE FOR DATA[23:16] (Differential-)	IO	W2
ddr_dqsn3	DDR DATA STROBE FOR DATA[31:24] (Differential-)	IO	AA2
ddr_nck	DDR SDRAM CLOCK (Differential-)	O	M1
ddr_odt0	DDR SDRAM ODT0	O	U1
ddr_odt1	DDR SDRAM ODT1	O	U2
ddr_rasn	DDR SDRAM ROW ADDRESS STROBE (ACTIVE LOW)	O	N2
ddr_resetn	DDR SDRAM RESET (only for DDR3)	O	T1
ddr_vref	Voltage Reference	AP (1)	T6
ddr_vtp	External Resistor for Impedance Training	I (2)	AC3
ddr_wen	DDR SDRAM WRITE ENABLE (ACTIVE LOW)	O	N4

(1) This terminal is an analog input used to set the switching threshold of the DDR input buffers to (VDDS_DDR / 2).

(2) This terminal is an analog passive signal that connects to an external 49.9 ohm 1%, 20mW reference resistor which is used to calibrate the DDR input/output buffers.

Table 4-28. General Purpose Memory Controller (GPMC) Signal Descriptions

SIGNAL NAME [1]	DESCRIPTION [2]	TYPE [3]	ZDN [4]
gpmc_a0	GPMC Address	O	B22, C3
gpmc_a1	GPMC Address	O	A21, B23, C5
gpmc_a2	GPMC Address	O	A23, B21, C6
gpmc_a3	GPMC Address	O	A22, A4, C21
gpmc_a4	GPMC Address	O	A20, A24, D7
gpmc_a5	GPMC Address	O	B20, C10, E7
gpmc_a6	GPMC Address	O	C20, E8
gpmc_a7	GPMC Address	O	E19, F6
gpmc_a8	GPMC Address	O	B23, F7

Copyright © 2014–2019, Texas Instruments Incorporated

Table 4-28. General Purpose Memory Controller (GPMC) Signal Descriptions (continued)

SIGNAL NAME [1]	DESCRIPTION [2]	TYPE [3]	ZDN [4]
gpmc_a9	GPMC Address	O	A23, B4
gpmc_a10	GPMC Address	O	A22, G8
gpmc_a11	GPMC Address	O	A24, D8
gpmc_a12	GPMC Address	O	A19
gpmc_a13	GPMC Address	O	B19
gpmc_a14	GPMC Address	O	A18
gpmc_a15	GPMC Address	O	B18
gpmc_a16	GPMC Address	O	C19, C3
gpmc_a17	GPMC Address	O	C5, D19
gpmc_a18	GPMC Address	O	C17, C6
gpmc_a19	GPMC Address	O	A4, D17
gpmc_a20	GPMC Address	O	B1, D7
gpmc_a21	GPMC Address	O	B2, E7
gpmc_a22	GPMC Address	O	C2, E8
gpmc_a23	GPMC Address	O	C1, F6
gpmc_a24	GPMC Address	O	D1, F7
gpmc_a25	GPMC Address	O	B4, D2
gpmc_a26	GPMC Address	O	G8
gpmc_a27	GPMC Address	O	D8
gpmc_ad0	GPMC Address and Data	IO	B5
gpmc_ad1	GPMC Address and Data	IO	A5
gpmc_ad2	GPMC Address and Data	IO	B6
gpmc_ad3	GPMC Address and Data	IO	A6
gpmc_ad4	GPMC Address and Data	IO	B7
gpmc_ad5	GPMC Address and Data	IO	A7
gpmc_ad6	GPMC Address and Data	IO	C8
gpmc_ad7	GPMC Address and Data	IO	B8
gpmc_ad8	GPMC Address and Data	IO	B10
gpmc_ad9	GPMC Address and Data	IO	A10
gpmc_ad10	GPMC Address and Data	IO	F11
gpmc_ad11	GPMC Address and Data	IO	D11
gpmc_ad12	GPMC Address and Data	IO	E11
gpmc_ad13	GPMC Address and Data	IO	C11
gpmc_ad14	GPMC Address and Data	IO	B11
gpmc_ad15	GPMC Address and Data	IO	A11
gpmc_advn_ale	GPMC Address Valid / Address Latch Enable	O	A9
gpmc_be0n_cle	GPMC Byte Enable 0 / Command Latch Enable	O	C10
gpmc_be1n	GPMC Byte Enable 1	O	A3, F10
gpmc_clk	GPMC Clock	IO	A12, B9
gpmc_csn0	GPMC Chip Select	O	A8
gpmc_csn1	GPMC Chip Select	O	B9
gpmc_csn2	GPMC Chip Select	O	F10
gpmc_csn3	GPMC Chip Select	O	B12
gpmc_csn4	GPMC Chip Select	O	A2
gpmc_csn5	GPMC Chip Select	O	B3
gpmc_csn6	GPMC Chip Select	O	A3
gpmc_dir	GPMC Data Direction	O	A3

Table 4-28. General Purpose Memory Controller (GPMC) Signal Descriptions (continued)

SIGNAL NAME [1]	DESCRIPTION [2]	TYPE [3]	ZDN [4]
gpmc_oen_ren	GPMC Output / Read Enable	O	E10
gpmc_wait0	GPMC Wait 0	I	A2, B12
gpmc_wait1	GPMC Wait 1	I	A12
gpmc_wen	GPMC Write Enable	O	D10
gpmc_wpn	GPMC Write Protect	O	B3

Copyright © 2014–2019, Texas Instruments Incorporated

4.3.8 General Purpose IOs

Table 4-29. GPIO0 Signal Descriptions

SIGNAL NAME [1]	DESCRIPTION [2]	TYPE [3]	ZDN [4]
gpio0_0	GPIO	IO	A17, D16
gpio0_1	GPIO	IO	A15, B17
gpio0_2	GPIO	IO	M25, P23
gpio0_3	GPIO	IO	L24, T22
gpio0_4	GPIO	IO	A12, T21
gpio0_5	GPIO	IO	T20
gpio0_6	GPIO	IO	R25
gpio0_7	GPIO	IO	G24
gpio0_8	GPIO	IO	C19, D14
gpio0_9	GPIO	IO	D13, D19
gpio0_10	GPIO	IO	C14, C17
gpio0_11	GPIO	IO	D17, E16
gpio0_12	GPIO	IO	K22
gpio0_13	GPIO	IO	L22
gpio0_14	GPIO	IO	K21
gpio0_15	GPIO	IO	L21
gpio0_16	GPIO	IO	C16
gpio0_17	GPIO	IO	C13
gpio0_18	GPIO	IO	G21, L23
gpio0_19	GPIO	IO	D24, K23
gpio0_20	GPIO	IO	C24, P22
gpio0_21	GPIO	IO	A14, P20
gpio0_22	GPIO	IO	B10, N20
gpio0_23	GPIO	IO	A10, T23
gpio0_24	GPIO	IO	H20
gpio0_25	GPIO	IO	F25
gpio0_26	GPIO	IO	F11
gpio0_27	GPIO	IO	D11
gpio0_28	GPIO	IO	B15
gpio0_29	GPIO	IO	A16
gpio0_30	GPIO	IO	A2
gpio0_31	GPIO	IO	B3

Table 4-30. GPIO1 Signal Descriptions

SIGNAL NAME [1]	DESCRIPTION [2]	TYPE [3]	ZDN [4]
gpio1_0	GPIO	IO	B5
gpio1_1	GPIO	IO	A5
gpio1_2	GPIO	IO	B6
gpio1_3	GPIO	IO	A6
gpio1_4	GPIO	IO	B7
gpio1_5	GPIO	IO	A7
gpio1_6	GPIO	IO	C8
gpio1_7	GPIO	IO	B8
gpio1_8	GPIO	IO	L25
gpio1_9	GPIO	IO	J25

Table 4-30. GPIO1 Signal Descriptions (continued)

SIGNAL NAME [1]	DESCRIPTION [2]	TYPE [3]	ZDN [4]
gpio1_10	GPIO	IO	K25
gpio1_11	GPIO	IO	J24
gpio1_12	GPIO	IO	E11
gpio1_13	GPIO	IO	C11
gpio1_14	GPIO	IO	B11
gpio1_15	GPIO	IO	A11
gpio1_16	GPIO	IO	C3
gpio1_17	GPIO	IO	C5
gpio1_18	GPIO	IO	C6
gpio1_19	GPIO	IO	A4
gpio1_20	GPIO	IO	D7
gpio1_21	GPIO	IO	E7
gpio1_22	GPIO	IO	E8
gpio1_23	GPIO	IO	F6
gpio1_24	GPIO	IO	F7
gpio1_25	GPIO	IO	B4
gpio1_26	GPIO	IO	G8
gpio1_27	GPIO	IO	D8
gpio1_28	GPIO	IO	A3
gpio1_29	GPIO	IO	A8
gpio1_30	GPIO	IO	B9
gpio1_31	GPIO	IO	F10

Table 4-31. GPIO2 Signal Descriptions

SIGNAL NAME [1]	DESCRIPTION [2]	TYPE [3]	ZDN [4]
gpio2_0	GPIO	IO	B12
gpio2_1	GPIO	IO	A12
gpio2_2	GPIO	IO	A9
gpio2_3	GPIO	IO	E10
gpio2_4	GPIO	IO	D10
gpio2_5	GPIO	IO	C10
gpio2_6	GPIO	IO	B22
gpio2_7	GPIO	IO	A21
gpio2_8	GPIO	IO	B21
gpio2_9	GPIO	IO	C21
gpio2_10	GPIO	IO	A20
gpio2_11	GPIO	IO	B20
gpio2_12	GPIO	IO	C20
gpio2_13	GPIO	IO	E19
gpio2_14	GPIO	IO	A19
gpio2_15	GPIO	IO	B19
gpio2_16	GPIO	IO	A18
gpio2_17	GPIO	IO	B18
gpio2_18	GPIO	IO	C14
gpio2_19	GPIO	IO	E16
gpio2_20	GPIO	IO	B16
gpio2_21	GPIO	IO	F17

Copyright © 2014–2019, Texas Instruments Incorporated

Table 4-31. GPIO2 Signal Descriptions (continued)

SIGNAL NAME [1]	DESCRIPTION [2]	TYPE [3]	ZDN [4]
gpio2_22	GPIO	IO	B23
gpio2_23	GPIO	IO	A23
gpio2_24	GPIO	IO	A22
gpio2_25	GPIO	IO	A24
gpio2_26	GPIO	IO	B1
gpio2_27	GPIO	IO	B2
gpio2_28	GPIO	IO	C2
gpio2_29	GPIO	IO	C1
gpio2_30	GPIO	IO	D1
gpio2_31	GPIO	IO	D2

Table 4-32. GPIO3 Signal Descriptions

SIGNAL NAME [1]	DESCRIPTION [2]	TYPE [3]	ZDN [4]
gpio3_0	GPIO	IO	D16
gpio3_1	GPIO	IO	B14
gpio3_2	GPIO	IO	B13
gpio3_3	GPIO	IO	A13
gpio3_4	GPIO	IO	A15
gpio3_5	GPIO	IO	AB24
gpio3_6	GPIO	IO	Y22
gpio3_7	GPIO	IO	N23
gpio3_8	GPIO	IO	T24
gpio3_9	GPIO	IO	D14
gpio3_10	GPIO	IO	D13
gpio3_11	GPIO	IO	C16
gpio3_12	GPIO	IO	C13
gpio3_13	GPIO	IO	F25
gpio3_14	GPIO	IO	N24
gpio3_15	GPIO	IO	N22
gpio3_16	GPIO	IO	H23
gpio3_17	GPIO	IO	M24
gpio3_18	GPIO	IO	L23
gpio3_19	GPIO	IO	K23
gpio3_20	GPIO	IO	M25
gpio3_21	GPIO	IO	L24
gpio3_22	GPIO	IO	P22
gpio3_23	GPIO	IO	P20
gpio3_24	GPIO	IO	N20
gpio3_25	GPIO	IO	T23

Table 4-33. GPIO4 Signal Descriptions

SIGNAL NAME [1]	DESCRIPTION [2]	TYPE [3]	ZDN [4]
gpio4_0	GPIO	IO	AE17
gpio4_1	GPIO	IO	AD18
gpio4_2	GPIO	IO	AC18
gpio4_3	GPIO	IO	AD17
gpio4_4	GPIO	IO	AC20

Copyright © 2014–2019, Texas Instruments Incorporated

Table 4-33. GPIO4 Signal Descriptions (continued)

SIGNAL NAME [1]	DESCRIPTION [2]	TYPE [3]	ZDN [4]
gpio4_5	GPIO	IO	AB19
gpio4_6	GPIO	IO	AA19
gpio4_7	GPIO	IO	AC24
gpio4_8	GPIO	IO	AD24
gpio4_9	GPIO	IO	AD25
gpio4_10	GPIO	IO	AC23
gpio4_11	GPIO	IO	AE21
gpio4_12	GPIO	IO	AC25
gpio4_13	GPIO	IO	AB25
gpio4_14	GPIO	IO	AB20
gpio4_15	GPIO	IO	AC21
gpio4_16	GPIO	IO	AD21
gpio4_17	GPIO	IO	AE22
gpio4_18	GPIO	IO	AD22
gpio4_19	GPIO	IO	AE23
gpio4_20	GPIO	IO	AD23
gpio4_21	GPIO	IO	AE24
gpio4_24	GPIO	IO	Y18
gpio4_25	GPIO	IO	AA18
gpio4_26	GPIO	IO	AE19
gpio4_27	GPIO	IO	AD19
gpio4_28	GPIO	IO	AE20
gpio4_29	GPIO	IO	AD20

Table 4-34. GPIO5 Signal Descriptions

SIGNAL NAME [1]	DESCRIPTION [2]	TYPE [3]	ZDN [4]
gpio5_0	GPIO	IO	H22
gpio5_1	GPIO	IO	K24
gpio5_2	GPIO	IO	H25
gpio5_3	GPIO	IO	H24
gpio5_4	GPIO	IO	P25
gpio5_5	GPIO	IO	R24
gpio5_6	GPIO	IO	P24
gpio5_7	GPIO	IO	N25
gpio5_8	GPIO	IO	D25
gpio5_9	GPIO	IO	F24
gpio5_10	GPIO	IO	G20
gpio5_11	GPIO	IO	F23
gpio5_12	GPIO	IO	E25
gpio5_13	GPIO	IO	E24
gpio5_19	GPIO	IO	AE18
gpio5_20	GPIO	IO	AB18
gpio5_23	GPIO	IO	D11
gpio5_24	GPIO	IO	F11
gpio5_25	GPIO	IO	A10
gpio5_26	GPIO	IO	B10
gpio5_27	GPIO	IO	G21

Copyright © 2014–2019, Texas Instruments Incorporated

Table 4-34. GPIO5 Signal Descriptions (continued)

SIGNAL NAME [1]	DESCRIPTION [2]	TYPE [3]	ZDN [4]
gpio5_28	GPIO	IO	D24
gpio5_29	GPIO	IO	C24
gpio5_30	GPIO	IO	A2
gpio5_31	GPIO	IO	B3

4.3.9 HDQ Interface

Table 4-35. HDQ Signal Description

SIGNAL NAME [1]	DESCRIPTION [2]	TYPE [3]	ZDN [4]
hdq_sio	HDQ 1W Data IO	IOD	K24

Copyright © 2014–2019, Texas Instruments Incorporated

4.3.10 I2C Interfaces

Table 4-36. I2C0 Signal Descriptions

SIGNAL NAME [1]	DESCRIPTION [2]	TYPE [3]	ZDN [4]
I2C0_SCL	I2C0 Clock	IOD	Y22
I2C0_SDA	I2C0 Data	IOD	AB24

Table 4-37. I2C1 Signal Descriptions

SIGNAL NAME [1]	DESCRIPTION [2]	TYPE [3]	ZDN [4]
I2C1_SCL	I2C1 Clock	IOD	AB18, B13, G20, J25, L21, N20, T20
I2C1_SDA	I2C1 Data	IOD	AE18, B14, E25, K21, L25, T21, T23

Table 4-38. I2C2 Signal Descriptions

SIGNAL NAME [1]	DESCRIPTION [2]	TYPE [3]	ZDN [4]
I2C2_SCL	I2C2 Clock	IOD	AB19, AC21, J24, L22, T22
I2C2_SDA	I2C2 Data	IOD	AB20, AC20, K22, K25, P23

4.3.11 McASP Interfaces

Table 4-39. McASP0 Signal Descriptions

SIGNAL NAME [1]	DESCRIPTION [2]	TYPE [3]	ZDN [4]
mcasp0_aclkr	McASP0 Receive Bit Clock	IO	A15, A3, C19, L23
mcasp0_aclkx	McASP0 Transmit Bit Clock	IO	A19, D14, E11, F7, N24
mcasp0_ahclkr	McASP0 Receive Master Clock	IO	B18, M24
mcasp0_ahclkx	McASP0 Transmit Master Clock	IO	C13, D17, L24
mcasp0_fsr	McASP0 Receive Frame Sync	IO	A12, C16, D19, K23
mcasp0_fsx	McASP0 Transmit Frame Sync	IO	B19, B4, C11, D13, N22
mcasp0_axr0	McASP0 Serial Data (IN/OUT)	IO	A18, B11, C14, G8, H23
mcasp0_axr1	McASP0 Serial Data (IN/OUT)	IO	A11, C17, D8, E16, M25
mcasp0_axr2	McASP0 Serial Data (IN/OUT)	IO	B18, C19, D16, L23, M24
mcasp0_axr3	McASP0 Serial Data (IN/OUT)	IO	D17, D19, F17, K23, L24

Table 4-40. McASP1 Signal Descriptions

SIGNAL NAME [1]	DESCRIPTION [2]	TYPE [3]	ZDN [4]
mcasp1_aclkr	McASP1 Receive Bit Clock	IO	B15, F17
mcasp1_aclkx	McASP1 Transmit Bit Clock	IO	A15, B14, L23
mcasp1_ahclkr	McASP1 Receive Master Clock	IO	F17
mcasp1_ahclkx	McASP1 Transmit Master Clock	IO	A16, F17
mcasp1_fsr	McASP1 Receive Frame Sync	IO	A14, B16
mcasp1_fsx	McASP1 Transmit Frame Sync	IO	B13, C16, K23
mcasp1_axr0	McASP1 Serial Data (IN/OUT)	IO	A13, C13, M25
mcasp1_axr1	McASP1 Serial Data (IN/OUT)	IO	A14, L24
mcasp1_axr2	McASP1 Serial Data (IN/OUT)	IO	B15, D16
mcasp1_axr3	McASP1 Serial Data (IN/OUT)	IO	A16, B16

Copyright © 2014–2019, Texas Instruments Incorporated

4.3.12 Miscellaneous

Table 4-41. Miscellaneous Signal Descriptions

SIGNAL NAME [1]	DESCRIPTION [2]	TYPE [3]	ZDN [4]
clkout1	Clock out1	O	D24
clkout2	Clock out2	O	C24
clkreq	Clock Request Control	O	H20
nNMI	External Interrupt to ARM Cortex A9 core	I	G25
nRESETIN_OUT	Warm Reset Input/Output	IOD (1)	G22
OSC0_IN	High frequency oscillator input	I	C25
OSC0_OUT	High frequency oscillator output	O	B25
OSC1_IN	Low frequency (32.768 KHz) Real Time Clock oscillator input	I	AE5
OSC1_OUT	Low frequency (32.768 KHz) Real Time Clock oscillator output	O	AE4
porz	Power on Reset	I	Y23
RTC_PORz	RTC active low reset input	I	AE6
tclkin	Timer Clock In	I	C24
xdma_event_intr0	External DMA Event or Interrupt 0	I	D24
xdma_event_intr1	External DMA Event or Interrupt 1	I	C24
xdma_event_intr2	External DMA Event or Interrupt 2	I	A16, G24, R25
xdma_event_intr3	External DMA Event or Interrupt 3	I	AD24
xdma_event_intr4	External DMA Event or Interrupt 4	I	AD25
xdma_event_intr5	External DMA Event or Interrupt 5	I	AC23
xdma_event_intr6	External DMA Event or Interrupt 6	I	AE21
xdma_event_intr7	External DMA Event or Interrupt 7	I	AC25
xdma_event_intr8	External DMA Event or Interrupt 8	I	AB25

(1) Refer to the External Warm Reset section of the Technical Reference Manual for more information related to the operation of this terminal.

Table 4-42. Reserved Signals

SIGNAL NAME [1]	DESCRIPTION [2]	TYPE [3]	ZDN [4]
Reserved		NA	AA10, AA7, AA9, AB10, AB6, AB7, AB9, AC10, AC12, AC5, AC6, AC7, AC9, AD1, AD10, AD11, AD2, AD7, AE11, AE12, AE9, H19, H21, W10, Y10, Y6, Y7

4.3.13 PRU-ICSS0 Interface

Table 4-43. PRU-ICSS0-PRU0/General Purpose Inputs Signal Descriptions

SIGNAL NAME [1]	DESCRIPTION [2]	TYPE [3]	ZDN [4]
pr0_pru0_gpi0	PRU-ICSS0 PRU0 Data In	I	N24
pr0_pru0_gpi1	PRU-ICSS0 PRU0 Data In	I	N22
pr0_pru0_gpi2	PRU-ICSS0 PRU0 Data In	I	H23
pr0_pru0_gpi3	PRU-ICSS0 PRU0 Data In	I	M24
pr0_pru0_gpi4	PRU-ICSS0 PRU0 Data In	I	L23
pr0_pru0_gpi5	PRU-ICSS0 PRU0 Data In	I	K23
pr0_pru0_gpi6	PRU-ICSS0 PRU0 Data In	I	M25
pr0_pru0_gpi7	PRU-ICSS0 PRU0 Data In	I	L24
pr0_pru0_gpi8	PRU-ICSS0 PRU0 Data In	I	B1
pr0_pru0_gpi9	PRU-ICSS0 PRU0 Data In	I	B2
pr0_pru0_gpi10	PRU-ICSS0 PRU0 Data In	I	C2
pr0_pru0_gpi11	PRU-ICSS0 PRU0 Data In	I	C1
pr0_pru0_gpi12	PRU-ICSS0 PRU0 Data In	I	D1
pr0_pru0_gpi13	PRU-ICSS0 PRU0 Data In	I	D2
pr0_pru0_gpi14	PRU-ICSS0 PRU0 Data In	I	AC20
pr0_pru0_gpi15	PRU-ICSS0 PRU0 Data In	I	AB19
pr0_pru0_gpi16	PRU-ICSS0 PRU0 Data In Capture Enable	I	AA19
pr0_pru0_gpi17	PRU-ICSS0 PRU0 Data In	I	AC24
pr0_pru0_gpi18	PRU-ICSS0 PRU0 Data In	I	H25
pr0_pru0_gpi19	PRU-ICSS0 PRU0 Data In	I	H24

Table 4-44. PRU-ICSS0-PRU0/General Purpose Outputs Signal Descriptions

SIGNAL NAME [1]	DESCRIPTION [2]	TYPE [3]	ZDN [4]
pr0_pru0_gpo0	PRU-ICSS0 PRU0 Data Out	O	N24
pr0_pru0_gpo1	PRU-ICSS0 PRU0 Data Out	O	N22
pr0_pru0_gpo2	PRU-ICSS0 PRU0 Data Out	O	H23
pr0_pru0_gpo3	PRU-ICSS0 PRU0 Data Out	O	M24
pr0_pru0_gpo4	PRU-ICSS0 PRU0 Data Out	O	L23
pr0_pru0_gpo5	PRU-ICSS0 PRU0 Data Out	O	K23
pr0_pru0_gpo6	PRU-ICSS0 PRU0 Data Out	O	M25
pr0_pru0_gpo7	PRU-ICSS0 PRU0 Data Out	O	L24
pr0_pru0_gpo8	PRU-ICSS0 PRU0 Data Out	O	B1
pr0_pru0_gpo9	PRU-ICSS0 PRU0 Data Out	O	B2
pr0_pru0_gpo10	PRU-ICSS0 PRU0 Data Out	O	C2
pr0_pru0_gpo11	PRU-ICSS0 PRU0 Data Out	O	C1
pr0_pru0_gpo12	PRU-ICSS0 PRU0 Data Out	O	D1
pr0_pru0_gpo13	PRU-ICSS0 PRU0 Data Out	O	D2
pr0_pru0_gpo14	PRU-ICSS0 PRU0 Data Out	O	AC20
pr0_pru0_gpo15	PRU-ICSS0 PRU0 Data Out	O	AB19
pr0_pru0_gpo16	PRU-ICSS0 PRU0 Data Out	O	AA19
pr0_pru0_gpo17	PRU-ICSS0 PRU0 Data Out	O	AC24
pr0_pru0_gpo18	PRU-ICSS0 PRU0 Data Out	O	H25
pr0_pru0_gpo19	PRU-ICSS0 PRU0 Data Out	O	H24

Copyright © 2014–2019, Texas Instruments Incorporated

Table 4-45. PRU-ICSS0-PRU1/General Purpose Inputs Signal Descriptions

SIGNAL NAME [1]	DESCRIPTION [2]	TYPE [3]	ZDN [4]
pr0_pru1_gpi0	PRU-ICSS0 PRU1 Data In	I	AD24
pr0_pru1_gpi1	PRU-ICSS0 PRU1 Data In	I	AD25
pr0_pru1_gpi2	PRU-ICSS0 PRU1 Data In	I	AC23
pr0_pru1_gpi3	PRU-ICSS0 PRU1 Data In	I	AE21
pr0_pru1_gpi4	PRU-ICSS0 PRU1 Data In	I	K25
pr0_pru1_gpi5	PRU-ICSS0 PRU1 Data In	I	J24
pr0_pru1_gpi6	PRU-ICSS0 PRU1 Data In	I	B23
pr0_pru1_gpi7	PRU-ICSS0 PRU1 Data In	I	A23
pr0_pru1_gpi8	PRU-ICSS0 PRU1 Data In	I	A22
pr0_pru1_gpi9	PRU-ICSS0 PRU1 Data In	I	A24
pr0_pru1_gpi10	PRU-ICSS0 PRU1 Data In	I	AD21
pr0_pru1_gpi11	PRU-ICSS0 PRU1 Data In	I	AE22
pr0_pru1_gpi12	PRU-ICSS0 PRU1 Data In	I	AD22
pr0_pru1_gpi13	PRU-ICSS0 PRU1 Data In	I	AE23
pr0_pru1_gpi14	PRU-ICSS0 PRU1 Data In	I	AD23
pr0_pru1_gpi15	PRU-ICSS0 PRU1 Data In	I	AE24
pr0_pru1_gpi16	PRU-ICSS0 PRU1 Data In Capture Enable	I	AE18
pr0_pru1_gpi17	PRU-ICSS0 PRU1 Data In	I	AB18
pr0_pru1_gpi18	PRU-ICSS0 PRU1 Data In	I	H22
pr0_pru1_gpi19	PRU-ICSS0 PRU1 Data In	I	K24

Table 4-46. PRU-ICSS0-PRU1/General Purpose Outputs Signal Descriptions

SIGNAL NAME [1]	DESCRIPTION [2]	TYPE [3]	ZDN [4]
pr0_pru1_gpo0	PRU-ICSS0 PRU1 Data Out	O	AD24
pr0_pru1_gpo1	PRU-ICSS0 PRU1 Data Out	O	AD25
pr0_pru1_gpo2	PRU-ICSS0 PRU1 Data Out	O	AC23
pr0_pru1_gpo3	PRU-ICSS0 PRU1 Data Out	O	AE21
pr0_pru1_gpo4	PRU-ICSS0 PRU1 Data Out	O	K25
pr0_pru1_gpo5	PRU-ICSS0 PRU1 Data Out	O	J24
pr0_pru1_gpo6	PRU-ICSS0 PRU1 Data Out	O	B23
pr0_pru1_gpo7	PRU-ICSS0 PRU1 Data Out	O	A23
pr0_pru1_gpo8	PRU-ICSS0 PRU1 Data Out	O	A22
pr0_pru1_gpo9	PRU-ICSS0 PRU1 Data Out	O	A24
pr0_pru1_gpo10	PRU-ICSS0 PRU1 Data Out	O	AD21
pr0_pru1_gpo11	PRU-ICSS0 PRU1 Data Out	O	AE22
pr0_pru1_gpo12	PRU-ICSS0 PRU1 Data Out	O	AD22
pr0_pru1_gpo13	PRU-ICSS0 PRU1 Data Out	O	AE23
pr0_pru1_gpo14	PRU-ICSS0 PRU1 Data Out	O	AD23
pr0_pru1_gpo15	PRU-ICSS0 PRU1 Data Out	O	AE24
pr0_pru1_gpo16	PRU-ICSS0 PRU1 Data Out	O	AE18
pr0_pru1_gpo17	PRU-ICSS0 PRU1 Data Out	O	AB18
pr0_pru1_gpo18	PRU-ICSS0 PRU1 Data Out	O	H22
pr0_pru1_gpo19	PRU-ICSS0 PRU1 Data Out	O	K24

Copyright © 2014–2019, Texas Instruments Incorporated

Table 4-47. PRU-ICSS0/UART0 Signal Descriptions

SIGNAL NAME [1]	DESCRIPTION [2]	TYPE [3]	ZDN [4]
pr0_uart0_cts_n	UART Clear to Send	I	P23
pr0_uart0_rts_n	UART Request to Send	O	T22
pr0_uart0_rxd	UART Receive Data	I	T21
pr0_uart0_txd	UART Transmit Data	O	T20

Copyright © 2014–2019, Texas Instruments Incorporated

4.3.14 PRU-ICSS1 Interface

Table 4-48. PRU-ICSS1-PRU0/General Purpose Inputs Signal Descriptions

SIGNAL NAME [1]	DESCRIPTION [2]	TYPE [3]	ZDN [4]
pr1_pru0_gpi0	PRU-ICSS1 PRU0 Data In	I	B22
pr1_pru0_gpi1	PRU-ICSS1 PRU0 Data In	I	A21
pr1_pru0_gpi2	PRU-ICSS1 PRU0 Data In	I	B21
pr1_pru0_gpi3	PRU-ICSS1 PRU0 Data In	I	C21
pr1_pru0_gpi4	PRU-ICSS1 PRU0 Data In	I	A20
pr1_pru0_gpi5	PRU-ICSS1 PRU0 Data In	I	B20
pr1_pru0_gpi6	PRU-ICSS1 PRU0 Data In	I	C20
pr1_pru0_gpi7	PRU-ICSS1 PRU0 Data In	I	E19
pr1_pru0_gpi8	PRU-ICSS1 PRU0 Data In	I	B9
pr1_pru0_gpi9	PRU-ICSS1 PRU0 Data In	I	F10
pr1_pru0_gpi10	PRU-ICSS1 PRU0 Data In	I	E11
pr1_pru0_gpi11	PRU-ICSS1 PRU0 Data In	I	C11
pr1_pru0_gpi16	PRU-ICSS1 PRU0 Data In Capture Enable	I	B11, C24, D24, K21, L21

Table 4-49. PRU-ICSS1-PRU0/General Purpose Outputs Signal Descriptions

SIGNAL NAME [1]	DESCRIPTION [2]	TYPE [3]	ZDN [4]
pr1_pru0_gpo0	PRU-ICSS1 PRU0 Data Out	O	B22
pr1_pru0_gpo1	PRU-ICSS1 PRU0 Data Out	O	A21
pr1_pru0_gpo2	PRU-ICSS1 PRU0 Data Out	O	B21
pr1_pru0_gpo3	PRU-ICSS1 PRU0 Data Out	O	C21
pr1_pru0_gpo4	PRU-ICSS1 PRU0 Data Out	O	A20
pr1_pru0_gpo5	PRU-ICSS1 PRU0 Data Out	O	B20
pr1_pru0_gpo6	PRU-ICSS1 PRU0 Data Out	O	C20
pr1_pru0_gpo7	PRU-ICSS1 PRU0 Data Out	O	E19
pr1_pru0_gpo8	PRU-ICSS1 PRU0 Data Out	O	B9
pr1_pru0_gpo9	PRU-ICSS1 PRU0 Data Out	O	F10
pr1_pru0_gpo10	PRU-ICSS1 PRU0 Data Out	O	E11
pr1_pru0_gpo11	PRU-ICSS1 PRU0 Data Out	O	C11

Table 4-50. PRU-ICSS1/ECAT Signal Descriptions

SIGNAL NAME [1]	DESCRIPTION [2]	TYPE [3]	ZDN [4]
pr1_edio_latch_in	Latch In	I	AE23
pr1_edio_outvalid	Data Out Valid	O	AD18
pr1_edio_sof	Start of Frame	O	AB25, AE17
pr1_edc_latch0_in	Data In	I	AE22, K22
pr1_edc_latch1_in	Data In	I	AD22, L22
pr1_edc_sync0_out	Data Out	O	L25
pr1_edc_sync1_out	Data Out	O	J25
pr1_edio_data_in0	Data In	I	AD23
pr1_edio_data_in1	Data In	I	AE24
pr1_edio_data_in2	Data In	I	B23
pr1_edio_data_in3	Data In	I	A23
pr1_edio_data_in4	Data In	I	A22
pr1_edio_data_in5	Data In	I	A24

Table 4-50. PRU-ICSS1/ECAT Signal Descriptions (continued)

SIGNAL NAME [1]	DESCRIPTION [2]	TYPE [3]	ZDN [4]
pr1_edio_data_in6	Data In	I	B9, C20
pr1_edio_data_in7	Data In	I	E19, F10
pr1_edio_data_out0	Data Out	O	T21
pr1_edio_data_out1	Data Out	O	T20
pr1_edio_data_out2	Data Out	O	B23
pr1_edio_data_out3	Data Out	O	A23
pr1_edio_data_out4	Data Out	O	A22
pr1_edio_data_out5	Data Out	O	A24
pr1_edio_data_out6	Data Out	O	B9, C20
pr1_edio_data_out7	Data Out	O	E19, F10

Table 4-51. PRU-ICSS1/MDIO Signal Descriptions

SIGNAL NAME [1]	DESCRIPTION [2]	TYPE [3]	ZDN [4]
pr1_mdio_data	MDIO Data	IO	A17, B12, D24
pr1_mdio_mdclk	MDIO Clk	O	A12, B17, C24

Table 4-52. PRU-ICSS1/MII0 Signal Descriptions

SIGNAL NAME [1]	DESCRIPTION [2]	TYPE [3]	ZDN [4]
pr1_mii0_col	MII Collision Detect	I	A10, D25
pr1_mii0_crs	MII Carrier Sense	I	B12, G20
pr1_mii0_rxdv	MII Receive Data Valid	I	D17
pr1_mii0_rxer	MII Receive Data Error	I	D19
pr1_mii0_rxlink	MII Receive Link	I	C19, E25
pr1_mii0_txen	MII Transmit Enable	O	A21, F11
pr1_mii0_rxd0	MII Receive Data bit 0	I	B18
pr1_mii0_rxd1	MII Receive Data bit 1	I	A18
pr1_mii0_rxd2	MII Receive Data bit 2	I	B19
pr1_mii0_rxd3	MII Receive Data bit 3	I	A19
pr1_mii0_txd0	MII Transmit Data bit 0	O	B11, B20
pr1_mii0_txd1	MII Transmit Data bit 1	O	A20, C11
pr1_mii0_txd2	MII Transmit Data bit 2	O	C21, E11
pr1_mii0_txd3	MII Transmit Data bit 3	O	B21, D11
pr1_mii_mr0_clk	MII Receive Clock	I	C17
pr1_mii_mt0_clk	MII Transmit Clock	I	B10, B22

Table 4-53. PRU-ICSS1/MII1 Signal Descriptions

SIGNAL NAME [1]	DESCRIPTION [2]	TYPE [3]	ZDN [4]
pr1_mii1_col	MII Collision Detect	I	A3, F24
pr1_mii1_crs	MII Carrier Sense	I	A12, A2, F23
pr1_mii1_rxdv	MII Receive Data Valid	I	C5
pr1_mii1_rxer	MII Receive Data Error	I	B3
pr1_mii1_rxlink	MII Receive Link	I	C10, E24
pr1_mii1_txen	MII Transmit Enable	O	C3
pr1_mii1_rxd0	MII Receive Data bit 0	I	D8
pr1_mii1_rxd1	MII Receive Data bit 1	I	G8
pr1_mii1_rxd2	MII Receive Data bit 2	I	B4

Copyright © 2014–2019, Texas Instruments Incorporated

Table 4-53. PRU-ICSS1/MII1 Signal Descriptions (continued)

SIGNAL NAME [1]	DESCRIPTION [2]	TYPE [3]	ZDN [4]
pr1_mii1_rxd3	MII Receive Data bit 3	I	F7
pr1_mii1_txd0	MII Transmit Data bit 0	O	E7
pr1_mii1_txd1	MII Transmit Data bit 1	O	D7
pr1_mii1_txd2	MII Transmit Data bit 2	O	A4
pr1_mii1_txd3	MII Transmit Data bit 3	O	C6
pr1_mii_mr1_clk	MII Receive Clock	I	F6
pr1_mii_mt1_clk	MII Transmit Clock	I	E8

Table 4-54. PRU-ICSS1/UART0 Signal Descriptions

SIGNAL NAME [1]	DESCRIPTION [2]	TYPE [3]	ZDN [4]
pr1_uart0_cts_n	UART Clear to Send	I	K22, P23
pr1_uart0_rts_n	UART Request to Send	O	L22, T22
pr1_uart0_rxd	UART Receive Data	I	K21, T21
pr1_uart0_txd	UART Transmit Data	O	L21, T20

Table 4-55. PRU-ICSS1/eCAP Signal Descriptions

SIGNAL NAME [1]	DESCRIPTION [2]	TYPE [3]	ZDN [4]
pr1_ecap0_ecap_capin_apwm_o	Enhanced capture input or Auxiliary PWM out	IO	A11, G24

4.3.15 QSPI Interface

Table 4-56. QSPI Signal Descriptions

SIGNAL NAME [1]	DESCRIPTION [2]	TYPE [3]	ZDN [4]
qspi_clk	QSPI Clock	IO	B12, Y18
qspi_csn	QSPI Chip Select	O	A8, AA18
qspi_d0	QSPI Data	IO	A9, AE19
qspi_d1	QSPI Data	I	AD19, E10
qspi_d2	QSPI Data	I	AE20, D10
qspi_d3	QSPI Data	I	AD20, C10

Copyright © 2014–2019, Texas Instruments Incorporated

4.3.16 RTC Subsystem Interface

Table 4-57. RTC Subsystem Signal Descriptions

SIGNAL NAME [1]	DESCRIPTION [2]	TYPE [3]	ZDN [4]
RTC_KALDO_ENn	Active low enable input for internal CAP_VDD_RTC voltage regulator	I	AE2
RTC_PMIC_EN	PMIC Power Enable output generated from Generic RTCSS	O	AD6
RTC_WAKEUP	External Wakeup Pin when Generic RTC is used	I	AE3

4.3.17 Removable Media Interfaces

Table 4-58. MMC0 Signal Descriptions

SIGNAL NAME [1]	DESCRIPTION [2]	TYPE [3]	ZDN [4]
mmc0_clk	MMC/SD/SDIO Clock	IO	D1
mmc0_cmd	MMC/SD/SDIO Command	IO	D2
mmc0_pow	MMC/SD Power Switch Control	O	A16, R25
mmc0_sdcd	SD Card Detect	I	A17, N24, R25
mmc0_sdwp	SD Write Protect	I	B17, G24, L23
mmc0_dat0	MMC/SD/SDIO Data Bus	IO	C1
mmc0_dat1	MMC/SD/SDIO Data Bus	IO	C2
mmc0_dat2	MMC/SD/SDIO Data Bus	IO	B2
mmc0_dat3	MMC/SD/SDIO Data Bus	IO	B1
mmc0_dat4	MMC/SD/SDIO Data Bus	IO	E16
mmc0_dat5	MMC/SD/SDIO Data Bus	IO	C14
mmc0_dat6	MMC/SD/SDIO Data Bus	IO	D13
mmc0_dat7	MMC/SD/SDIO Data Bus	IO	D14

Table 4-59. MMC1 Signal Descriptions

SIGNAL NAME [1]	DESCRIPTION [2]	TYPE [3]	ZDN [4]
mmc1_clk	MMC/SD/SDIO Clock	IO	B15, B17, B9, Y18
mmc1_cmd	MMC/SD/SDIO Command	IO	A14, A17, AA18, F10
mmc1_sdcd	SD Card Detect	I	A2, N22
mmc1_sdwp	SD Write Protect	I	K21, T21
mmc1_dat0	MMC/SD/SDIO Data Bus	IO	AE19, B10, B5, D14
mmc1_dat1	MMC/SD/SDIO Data Bus	IO	A10, A5, AD19, D13
mmc1_dat2	MMC/SD/SDIO Data Bus	IO	AE20, B6, C14, F11
mmc1_dat3	MMC/SD/SDIO Data Bus	IO	A6, AD20, D11, E16
mmc1_dat4	MMC/SD/SDIO Data Bus	IO	B7, E11
mmc1_dat5	MMC/SD/SDIO Data Bus	IO	A7, C11
mmc1_dat6	MMC/SD/SDIO Data Bus	IO	B11, C8
mmc1_dat7	MMC/SD/SDIO Data Bus	IO	A11, B8

Table 4-60. MMC2 Signal Descriptions

SIGNAL NAME [1]	DESCRIPTION [2]	TYPE [3]	ZDN [4]
mmc2_clk	MMC/SD/SDIO Clock	IO	A12, AD21, B16, B17
mmc2_cmd	MMC/SD/SDIO Command	IO	A13, A17, AE22, B12
mmc2_sdcd	SD Card Detect	I	B3, H23
mmc2_sdwp	SD Write Protect	I	L21, T20
mmc2_dat0	MMC/SD/SDIO Data Bus	IO	A15, AD22, C5, E11
mmc2_dat1	MMC/SD/SDIO Data Bus	IO	AE23, C11, C16, C6
mmc2_dat2	MMC/SD/SDIO Data Bus	IO	A4, AD23, B11, C13
mmc2_dat3	MMC/SD/SDIO Data Bus	IO	A11, A3, AE24, D16
mmc2_dat4	MMC/SD/SDIO Data Bus	IO	B10, E8
mmc2_dat5	MMC/SD/SDIO Data Bus	IO	A10, F6
mmc2_dat6	MMC/SD/SDIO Data Bus	IO	F11, F7
mmc2_dat7	MMC/SD/SDIO Data Bus	IO	B4, D11

Copyright © 2014–2019, Texas Instruments Incorporated

4.3.18 SPI Interfaces

Table 4-61. SPI0 Signal Descriptions

SIGNAL NAME [1]	DESCRIPTION [2]	TYPE [3]	ZDN [4]
spi0_sclk	SPI Clock	IO	P23
spi0_cs0	SPI Chip Select	IO	T20
spi0_cs1	SPI Chip Select	IO	R25
spi0_cs2	SPI Chip Select	IO	AD24, C24, E10
spi0_cs3	SPI Chip Select	IO	A9, AD25, N24
spi0_d0	SPI Data	IO	T22
spi0_d1	SPI Data	IO	T21

Table 4-62. SPI1 Signal Descriptions

SIGNAL NAME [1]	DESCRIPTION [2]	TYPE [3]	ZDN [4]
spi1_sclk	SPI Clock	IO	D16, G24, N24
spi1_cs0	SPI Chip Select	IO	A16, J25, K22, K25, M24
spi1_cs1	SPI Chip Select	IO	D24, G24, J24, L22
spi1_cs2	SPI Chip Select	IO	AC23, D10, N22
spi1_cs3	SPI Chip Select	IO	AE21, C10, H23
spi1_d0	SPI Data	IO	B14, L25, N22
spi1_d1	SPI Data	IO	B13, H23, J25

Table 4-63. SPI2 Signal Descriptions

SIGNAL NAME [1]	DESCRIPTION [2]	TYPE [3]	ZDN [4]
spi2_sclk	SPI Clock	IO	AC18, AE21, N20
spi2_cs0	SPI Chip Select	IO	AC20, AD25, T23
spi2_cs1	SPI Chip Select	IO	AC25, AE17
spi2_cs2	SPI Chip Select	IO	AB19, AC23
spi2_cs3	SPI Chip Select	IO	AA19, AC24
spi2_d0	SPI Data	IO	AD17, AD24, P22
spi2_d1	SPI Data	IO	AB25, AD18, P20

Table 4-64. SPI3 Signal Descriptions

SIGNAL NAME [1]	DESCRIPTION [2]	TYPE [3]	ZDN [4]
spi3_sclk	SPI Clock	IO	AE22, B10, C19
spi3_cs0	SPI Chip Select	IO	AD21, D11, D17
spi3_cs1	SPI Chip Select	IO	A11, B10, B18, C10
spi3_d0	SPI Data	IO	A10, AB20, D19
spi3_d1	SPI Data	IO	AC21, C17, F11

Table 4-65. SPI4 Signal Descriptions

SIGNAL NAME [1]	DESCRIPTION [2]	TYPE [3]	ZDN [4]
spi4_sclk	SPI Clock	IO	P25
spi4_cs0	SPI Chip Select	IO	N25
spi4_cs1	SPI Chip Select	IO	H22
spi4_d0	SPI Data	IO	R24
spi4_d1	SPI Data	IO	P24

4.3.19 Timer Interfaces

Table 4-66. Timer0 Signal Descriptions

SIGNAL NAME [1]	DESCRIPTION [2]	TYPE [3]	ZDN [4]
timer0	Timer trigger event / PWM out	IO	R25

Table 4-67. Timer1 Signal Descriptions

SIGNAL NAME [1]	DESCRIPTION [2]	TYPE [3]	ZDN [4]
timer1	Timer trigger event / PWM out	IO	G24

Table 4-68. Timer4 Signal Descriptions

SIGNAL NAME [1]	DESCRIPTION [2]	TYPE [3]	ZDN [4]
timer4	Timer trigger event / PWM out	IO	A13, A9, AB24, D24

Table 4-69. Timer5 Signal Descriptions

SIGNAL NAME [1]	DESCRIPTION [2]	TYPE [3]	ZDN [4]
timer5	Timer trigger event / PWM out	IO	B1, B17, C10, L22

Table 4-70. Timer6 Signal Descriptions

SIGNAL NAME [1]	DESCRIPTION [2]	TYPE [3]	ZDN [4]
timer6	Timer trigger event / PWM out	IO	A17, B2, D10, K22

Table 4-71. Timer7 Signal Descriptions

SIGNAL NAME [1]	DESCRIPTION [2]	TYPE [3]	ZDN [4]
timer7	Timer trigger event / PWM out	IO	C24, E10, L25, Y22

Copyright © 2014–2019, Texas Instruments Incorporated

4.3.20 UART Interfaces

Table 4-72. UART0 Signal Descriptions

SIGNAL NAME [1]	DESCRIPTION [2]	TYPE [3]	ZDN [4]
uart0_ctsn	UART Clear to Send	I	AC24, L25
uart0_dcdn	UART Data Carrier Detect	I	AD22
uart0_rtsn	UART Request to Send	O	AD24, J25
uart0_rxd	UART Receive Data	I	K25
uart0_txd	UART Transmit Data	O	J24

Table 4-73. UART1 Signal Descriptions

SIGNAL NAME [1]	DESCRIPTION [2]	TYPE [3]	ZDN [4]
uart1_ctsn	UART Clear to Send	IO	AD21, K22
uart1_dcdn	UART Clear to Send	I	AD23, B1, D14
uart1_dsrn	UART Request to Send	I	AE23, B2, D13
uart1_dtrn	UART Receive Data	O	AE24, C14, C2
uart1_rin	UART Transmit Data	I	AD22, C1, E16
uart1_rtsn	UART Request to Send	O	AE22, L22
uart1_rxd	UART Receive Data	IO	AB20, K21
uart1_txd	UART Transmit Data	IO	AC21, L21

Table 4-74. UART2 Signal Descriptions

SIGNAL NAME [1]	DESCRIPTION [2]	TYPE [3]	ZDN [4]
uart2_ctsn	UART Clear to Send	IO	A19, AB24, AD23
uart2_rtsn	UART Request to Send	O	AE24, B19, Y22
uart2_rxd	UART Receive Data	IO	AD22, B14, D1, D14, P23
uart2_txd	UART Transmit Data	IO	AE23, B13, D13, D2, T22

Table 4-75. UART3 Signal Descriptions

SIGNAL NAME [1]	DESCRIPTION [2]	TYPE [3]	ZDN [4]
uart3_ctsn	UART Clear to Send	IO	A17, A18, D1, H22
uart3_rtsn	UART Request to Send	O	B17, B18, D2, K24
uart3_rxd	UART Receive Data	IO	C14, C2, H25, R25
uart3_txd	UART Transmit Data	IO	C1, E16, G24, H24

Table 4-76. UART4 Signal Descriptions

SIGNAL NAME [1]	DESCRIPTION [2]	TYPE [3]	ZDN [4]
uart4_ctsn	UART Clear to Send	I	B1, C19
uart4_rtsn	UART Request to Send	O	B2, D19
uart4_rxd	UART Receive Data	I	A2, C16, L25
uart4_txd	UART Transmit Data	O	B3, C13, J25

Table 4-77. UART5 Signal Descriptions

SIGNAL NAME [1]	DESCRIPTION [2]	TYPE [3]	ZDN [4]
uart5_ctsn	UART Clear to Send	I	B14, C17, C2
uart5_rtsn	UART Request to Send	O	B13, C1, D17

Table 4-77. UART5 Signal Descriptions (continued)

SIGNAL NAME [1]	DESCRIPTION [2]	TYPE [3]	ZDN [4]
uart5_rxd	UART Receive Data	I	A17, B19, C17, D16
uart5_txd	UART Transmit Data	O	A15, A16, A19, B17

Copyright © 2014–2019, Texas Instruments Incorporated

4.3.21 USB Interfaces

Table 4-78. USB0 Signal Descriptions

SIGNAL NAME [1]	DESCRIPTION [2]	TYPE [3]	ZDN [4]
USB0_CE	USB0 Active high Charger Enable output	A	W22
USB0_DM	USB0 Data minus	A	W24
USB0_DP	USB0 Data plus	A	W25
USB0_DRVVBUS	USB0 Active high VBUS control output	O	G21
USB0_ID	USB0 ID	A	U24
USB0_VBUS	USB0 VBUS	A	U23

Table 4-79. USB1 Signal Descriptions

SIGNAL NAME [1]	DESCRIPTION [2]	TYPE [3]	ZDN [4]
USB1_CE	USB1 Active high Charger Enable output	A	U22
USB1_DM	USB1 Data minus	A	V25
USB1_DP	USB1 Data plus	A	V24
USB1_DRVVBUS	USB1 Active high VBUS control output	O	F25
USB1_ID	USB1 ID	A	U25
USB1_VBUS	USB1 VBUS	A	T25

4.3.22 eCAP Interfaces

Table 4-80. eCAP0 Signal Descriptions

SIGNAL NAME [1]	DESCRIPTION [2]	TYPE [3]	ZDN [4]
eCAP0_in_PWM0_out	Enhanced Capture 0 input or Auxiliary PWM0 output	IO	G24

Table 4-81. eCAP1 Signal Descriptions

SIGNAL NAME [1]	DESCRIPTION [2]	TYPE [3]	ZDN [4]
eCAP1_in_PWM1_out	Enhanced Capture 1 input or Auxiliary PWM1 output	IO	J24, R25, Y22

Table 4-82. eCAP2 Signal Descriptions

SIGNAL NAME [1]	DESCRIPTION [2]	TYPE [3]	ZDN [4]
eCAP2_in_PWM2_out	Enhanced Capture 2 input or Auxiliary PWM2 output	IO	AB24, K25, M24

Copyright © 2014–2019, Texas Instruments Incorporated

4.3.23 eHRPWM Interfaces

Table 4-83. eHRPWM0 Signal Descriptions

SIGNAL NAME [1]	DESCRIPTION [2]	TYPE [3]	ZDN [4]
ehrpwm0_synci	Sync input to eHRPWM0 module from an external pin	I	AC21, M24, P25, T20
ehrpwm0_synco	Sync Output from eHRPWM0 module to an external pin	O	AE18, B19, C21, C5, D11
ehrpwm0_tripzone_input	eHRPWM0 trip zone input	I	AB20, H23, P24, T21
ehrpwm0A	eHRPWM0 A output.	O	AD25, N24, P23
ehrpwm0B	eHRPWM0 B output.	O	AC23, N22, T22

Table 4-84. eHRPWM1 Signal Descriptions

SIGNAL NAME [1]	DESCRIPTION [2]	TYPE [3]	ZDN [4]
ehrpwm1_tripzone_input	eHRPWM1 trip zone input	I	A19, AD21, C3, P20
ehrpwm1A	eHRPWM1 A output.	O	A18, AE20, AE21, C6, T21
ehrpwm1B	eHRPWM1 B output.	O	A4, AC25, AD20, B18, T20

Table 4-85. eHRPWM2 Signal Descriptions

SIGNAL NAME [1]	DESCRIPTION [2]	TYPE [3]	ZDN [4]
ehrpwm2_tripzone_input	eHRPWM2 trip zone input	I	B21, F11, T23
ehrpwm2A	eHRPWM2 A output.	O	B10, B22, R25
ehrpwm2B	eHRPWM2 B output.	O	A10, A21, G24

Table 4-86. eHRPWM3 Signal Descriptions

SIGNAL NAME [1]	DESCRIPTION [2]	TYPE [3]	ZDN [4]
ehrpwm3_synci	Sync input to eHRPWM3 module or sync output to external PWM	I	R24
ehrpwm3_synco	Sync input to eHRPWM3 module or sync output to external PWM	O	AB18
ehrpwm3_tripzone_input	eHRPWM3 trip zone input	I	N25
ehrpwm3A	eHRPWM3 A output.	O	AC25, AE19
ehrpwm3B	eHRPWM3 B output.	O	AB25, AD19

Table 4-87. eHRPWM4 Signal Descriptions

SIGNAL NAME [1]	DESCRIPTION [2]	TYPE [3]	ZDN [4]
ehrpwm4_tripzone_input	eHRPWM4 trip zone input	I	N20
ehrpwm4A	eHRPWM4 A output.	O	H25
ehrpwm4B	eHRPWM4 B output.	O	H24

Table 4-88. eHRPWM5 Signal Descriptions

SIGNAL NAME [1]	DESCRIPTION [2]	TYPE [3]	ZDN [4]
ehrpwm5_tripzone_input	eHRPWM5 trip zone input	I	P22
ehrpwm5A	eHRPWM5 A output.	O	H22
ehrpwm5B	eHRPWM5 B output.	O	K24

Copyright © 2014–2019, Texas Instruments Incorporated

4.3.24 eQEP Interfaces

Table 4-89. eQEP0 Signal Descriptions

SIGNAL NAME [1]	DESCRIPTION [2]	TYPE [3]	ZDN [4]
eQEP0_index	eQEP0 index.	IO	A13, M25
eQEP0_strobe	eQEP0 strobe.	IO	B16, L24
eQEP0A_in	eQEP0A quadrature input	I	A14, L23
eQEP0B_in	eQEP0B quadrature input	I	B15, K23

Table 4-90. eQEP1 Signal Descriptions

SIGNAL NAME [1]	DESCRIPTION [2]	TYPE [3]	ZDN [4]
eQEP1_index	eQEP1 index.	IO	C17, E8
eQEP1_strobe	eQEP1 strobe.	IO	D17, F6
eQEP1A_in	eQEP1A quadrature input	I	C19, D7
eQEP1B_in	eQEP1B quadrature input	I	D19, E7

Table 4-91. eQEP2 Signal Descriptions

SIGNAL NAME [1]	DESCRIPTION [2]	TYPE [3]	ZDN [4]
eQEP2_index	eQEP2 index.	IO	B11, C20
eQEP2_strobe	eQEP2 strobe.	IO	A11, E19
eQEP2A_in	eQEP2A quadrature input	I	A20, E11
eQEP2B_in	eQEP2B quadrature input	I	B20, C11

Copyright © 2014–2019, Texas Instruments Incorporated

5 Specifications

5.1 Absolute Maximum Ratings

over junction temperature range (unless otherwise noted)[(1)(2)]

			MIN	MAX	UNIT
VDD_MPU	Supply voltage for the MPU domain		–0.5	1.5	V
VDD_CORE	Supply voltage range for the CORE domain		–0.5	1.5	V
CAP_VDD_RTC[(3)]	Supply voltage range for the RTC domain		–0.5	1.5	V
VDDS_RTC	Supply voltage range for the RTC domain		–0.5	2.1	V
VDDS_OSC	Supply voltage range for the System oscillator		–0.5	2.1	V
VDDS_SRAM_CORE_BG	Supply voltage range for the Core SRAM and Bandgap LDOs		–0.5	2.1	V
VDDS_SRAM_MPU_BB	Supply voltage range for the MPU SRAM and BB LDOs		–0.5	2.1	V
VDDS_PLL_DDR	Supply voltage range for the DPLL DDR		–0.5	2.1	V
VDDS_PLL_CORE_LCD	Supply voltage range for the DPLL CORE, EXTDEV, and LCD		–0.5	2.1	V
VDDS_PLL_MPU	Supply voltage range for the DPLL MPU		–0.5	2.1	V
VDDS_DDR	Supply voltage range for the DDR IO domain		–0.5	2.1	V
VDDS	Supply voltage range for all dual-voltage IO domains		–0.5	2.1	V
VDDA1P8V_USB0	Supply voltage range for USBPHY and DPLL PER		–0.5	2.1	V
VDDA1P8V_USB1	Supply voltage range for USBPHY		–0.5	2.1	V
VDDA_ADC0	Supply voltage range for ADC0		–0.5	2.1	V
VDDA_ADC1	Supply voltage range for ADC1		–0.5	2.1	V
VDDSHV1	Supply voltage range for the dual-voltage IO domain		–0.5	3.8	V
VDDSHV2	Supply voltage range for the dual-voltage IO domain		–0.5	3.8	V
VDDSHV3	Supply voltage range for the dual-voltage IO domain		–0.5	3.8	V
VDDSHV5	Supply voltage range for the CLKOUT voltage domain		–0.5	3.8	V
VDDSHV6	Supply voltage range for the dual-voltage IO domain		–0.5	3.8	V
VDDSHV7	Supply voltage range for the dual-voltage IO domain		–0.5	3.8	V
VDDSHV8	Supply voltage range for the dual-voltage IO domain		–0.5	3.8	V
VDDSHV9	Supply voltage range for the dual-voltage IO domain		–0.5	3.8	V
VDDSHV10	Supply voltage range for the dual-voltage IO domain		–0.5	3.8	V
VDDSHV11	Supply voltage range for the dual-voltage IO domain		–0.5	3.8	V
VDDA3P3V_USB0	Supply voltage range for USBPHY		–0.5	4	V
VDDA3P3V_USB1	Supply voltage range for USBPHY		–0.5	4	V
VDDS3P3V_IOLDO	Supply voltage range for the dual-voltage IO LDO		–0.5	3.8	V
VDDS_CLKOUT	Supply voltage range for CLKOUT domain		–0.5	2.1	V
USB0_VBUS[(4)]	Supply voltage range for USB VBUS comparator input		–0.5	5.25	V
USB1_VBUS[(4)]	Supply voltage range for USB VBUS comparator input		–0.5	5.25	V
DDR_VREF	Supply voltage range for the DDR3/DDR3L HSTL, LPDDR2 HSUL_12 reference voltage		–0.3	1.1	V
Steady State Max. Voltage at all IO pins[(5)]			–0.5 V to IO supply voltage + 0.3 V		
USB0_ID[(6)]	Steady state maximum voltage range for the USB ID input		–0.5	2.1	V
USB1_ID[(6)]	Steady state maximum voltage range for the USB ID input		–0.5	2.1	V
Transient Overshoot and Undershoot specification at IO terminal			20% of corresponding IO supply voltage for up to 20% of signal period (see Figure 5-1)		
Latch-up Performance[(7)]	Class II (105°C)	Latch-up I-test performance current-pulse injection on each IO pin	±100		mA
		Latch-up overvoltage performance voltage injection on each IO pin	±100		
T_{stg}[(8)]	Storage temperature		–55	155	°C

(1) Stresses beyond those listed under *Absolute Maximum Ratings* may cause permanent damage to the device. These are stress ratings only, and functional operation of the device at these or any other conditions beyond those indicated under *Recommended Operating Conditions* is not implied. Exposure to absolute-maximum-rated conditions for extended periods may affect device reliability.

(2) All voltage values are with respect to their associated VSS or VSSA_x.

Absolute Maximum Ratings *(continued)*

over junction temperature range (unless otherwise noted)(1)(2)

(3) This supply is sourced from an internal LDO when RTC_KALDO_ENn is low. If RTC_KALDO_ENn is high, this supply must be sourced from an external power supply.

(4) This terminal is connected to a fail-safe IO and does not have a dependence on any IO supply voltage.

(5) This parameter applies to all IO terminals which are not fail-safe and the requirement applies to all values of IO supply voltage. For example, if the voltage applied to a specific IO supply is 0 volts the valid input voltage range for any IO powered by that supply will be –0.5 to +0.3 volts. Special attention should be applied anytime peripheral devices are not powered from the same power sources used to power the respective IO supply. It is important the attached peripheral never sources a voltage outside the valid input voltage range, including power supply ramp-up and ramp-down sequences.

(6) This terminal is connected to analog circuits in the respective USB PHY. The circuit sources a known current while measuring the voltage to determine if the terminal is connected to VSSA_USB with a resistance less than 10 Ω or greater than 100 kΩ. The terminal should be connected to ground for USB host operation or open-circuit for USB peripheral operation, and should never be connected to any external voltage source.

(7) For current pulse injection:
Pins stressed per JEDEC JESD78D (Class II) and passed with specified I/O pin injection current and clamp voltage of 1.5 times maximum recommended I/O voltage and negative 0.5 times maximum recommended I/O voltage.

For overvoltage performance:
Supplies stressed per JEDEC JESD78D (Class II) and passed specified voltage injection.

(8) For tape and reel the storage temperature range is [–10°C; +50°C] with a maximum relative humidity of 70%. TI recommends returning to ambient room temperature before usage.

Fail-safe IO terminals are designed such they do not have dependencies on the respective IO power supply voltage. This allows external voltage sources to be connected to these IO terminals when the respective IO power supplies are turned off. The USB0_VBUS, USB1_VBUS, and DDR_RESETn are the only fail-safe IO terminals. All other IO terminals are not fail-safe and the voltage applied to them should be limited to the value defined by the Steady State Max. Voltage at all IO pins parameter in Section 5.1.

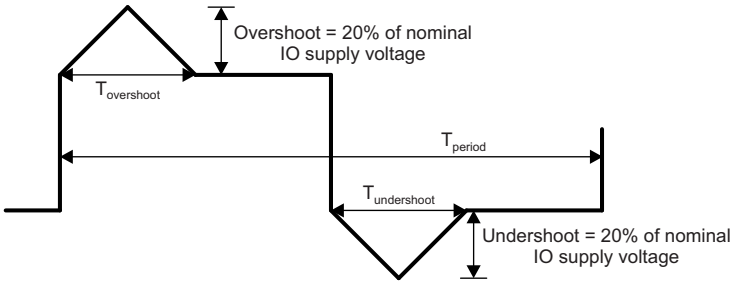

Figure 5-1. $T_{overshoot} + T_{undershoot} < 20\%$ of T_{period}

Copyright © 2014–2019, Texas Instruments Incorporated

5.2 ESD Ratings

			VALUE	UNIT
V_{ESD}	Electrostatic discharge (ESD)	Human body model (HBM), per ANSI/ESDA/JEDEC JS-001[(1)]	±1000	V
		Charged device model (CDM), per JESD22-C101[(2)]	±250	

(1) JEDEC document JEP155 states that 500-V HBM allows safe manufacturing with a standard ESD control process.

(2) JEDEC document JEP157 states that 250-V CDM allows safe manufacturing with a standard ESD control process.

5.3 Power-On Hours (POH)[(1)(2)(3)(4)]

OPERATING CONDITION	COMMERCIAL		INDUSTRIAL		EXTENDED	
	JUNCTION TEMP (T_j)	LIFETIME (POH)[(5)]	JUNCTION TEMP (T_j)	LIFETIME (POH)[(5)]	JUNCTION TEMP (T_j)	LIFETIME (POH)[(5)]
Nitro	0°C to 90°C	100K	–40°C to 90°C	100K	–40°C to 105°C	84.4K
Turbo	0°C to 90°C	100K	–40°C to 90°C	100K	–40°C to 105°C	100K
OPP120	0°C to 90°C	100K	–40°C to 90°C	100K	–40°C to 105°C	100K
OPP100	0°C to 90°C	100K	–40°C to 90°C	100K	–40°C to 105°C	100K
OPP50	0°C to 90°C	100K	–40°C to 90°C	100K	–40°C to 105°C	100K

(1) The POH information in this table is provided solely for your convenience and does not extend or modify the warranty provided under TI's standard terms and conditions for TI semiconductor products.

(2) To avoid significant degradation, the device POH must be limited as described in this table.

(3) Logic functions and parameter values are not assured out of the range specified in the recommended operating conditions.

(4) The previous notations cannot be deemed a warranty or deemed to extend or modify the warranty under TI's standard terms and conditions for TI semiconductor products.

(5) POH = Power-on hours when the device is fully functional.

5.4 Operating Performance Points

Device operating performance points (OPPs) are defined in Table 5-1, Table 5-2, and Table 5-3.

Table 5-1. VDD_CORE OPPs(1)

VDD_CORE OPP	VDD_CORE			DDR3/DDR3L(2)	LPDDR2(2)	L3 and L4
	MIN	NOM	MAX			
OPP100	1.056 V	1.100 V	1.144 V	400 MHz	266 MHz	200 MHz and 100 MHz
OPP50	0.912 V	0.950 V	1 V	Not supported	133 MHz	100 MHz and 50 MHz

(1) Frequencies in this table indicate maximum performance for a given OPP condition.

(2) This parameter represents the maximum memory clock frequency. Because data is transferred on both edges of the clock, double-data rate (DDR), the maximum data rate is two times the maximum memory clock frequency defined in this table.

Table 5-2. VDD_MPU OPPs(1)

VDD_MPU OPP	VDD_MPU			ARM (A9)
	MIN	NOM	MAX	
Nitro	1.272 V	1.325 V	1.378 V	1 GHz
Turbo	1.210 V	1.260 V	1.326 V	800 MHz
OPP120	1.152 V	1.200 V	1.248 V	720 MHz
OPP100	1.056 V	1.100 V	1.144 V	600 MHz
OPP50	0.912 V	0.950 V	1.000 V	300 MHz

(1) Frequencies in this table indicate maximum performance for a given OPP condition.

Table 5-3. Valid Combinations of VDD_CORE and VDD_MPU OPPs(1)

VDD_CORE	VDD_MPU
OPP50	OPP50
OPP100	OPP50
OPP100	OPP100
OPP100	OPP120
OPP100	Turbo
OPP100	Nitro

(1) OPP combinations listed in this table have been tested. Other OPP combinations are not supported.

Copyright © 2014–2019, Texas Instruments Incorporated

5.5 Recommended Operating Conditions

over junction temperature range (unless otherwise noted)

SUPPLY NAME	DESCRIPTION		MIN	NOM	MAX	UNIT
VDD_CORE	Supply voltage range for core domain; OPP100		1.056	1.100	1.144	V
	Supply voltage range for core domain; OPP50		0.912	0.950	1.000	
VDD_MPU	Supply voltage range for MPU domain, Nitro		1.272	1.325	1.378	V
	Supply voltage range for MPU domain; Turbo		1.210	1.260	1.326	
	Supply voltage range for MPU domain; OPP120		1.152	1.200	1.248	
	Supply voltage range for MPU domain; OPP100		1.056	1.100	1.144	
	Supply voltage range for MPU domain; OPP50		0.912	0.950	1.000	
CAP_VDD_RTC(1)	Supply voltage range for RTC core domain		0.900	1.100	1.250	V
VDDS_RTC	Supply voltage range for RTC domain		1.710	1.800	1.890	V
VDDS_DDR	Supply voltage range for DDR IO domain (DDR3)		1.425	1.500	1.575	V
	Supply voltage range for DDR IO domain (DDR3L)		1.283	1.350	1.418	
	Supply voltage range for DDR IO domain (LPDDR2)		1.140	1.200	1.260	
VDDS(2)	Supply voltage range for all dual-voltage IO domains		1.710	1.800	1.890	V
VDDS_SRAM_CORE_BG	Supply voltage range for Core SRAM LDOs, Analog		1.710	1.800	1.890	V
VDDS_SRAM_MPU_BB	Supply voltage range for MPU SRAM LDOs, Analog		1.710	1.800	1.890	V
VDDS_PLL_DDR(3)	Supply voltage range for DPLL DDR, Analog		1.710	1.800	1.890	V
VDDS_PLL_CORE_LCD(3)	Supply voltage range for DPLL CORE, EXTDEV, and LCD, Analog		1.710	1.800	1.890	V
VDDS_PLL_MPU(3)	Supply voltage range for DPLL MPU, Analog		1.710	1.800	1.890	V
VDDS_OSC	Supply voltage range for system oscillator, Analog		1.710	1.800	1.890	V
VDDA1P8V_USB0(3)	Supply voltage range for USBPHY and DPLL PER, Analog, 1.8 V		1.710	1.800	1.890	V
VDDA1P8V_USB1	Supply voltage range for USBPHY, Analog, 1.8 V		1.710	1.800	1.890	V
VDDA3P3V_USB0	Supply voltage range for USBPHY, Analog, 3.3 V		3.135	3.300	3.465	V
VDDA3P3V_USB1	Supply voltage range for USBPHY, Analog, 3.3 V		3.135	3.300	3.465	V
VDDA_ADC0	Supply voltage range for ADC0, Analog		1.710	1.800	1.890	V
VDDA_ADC1	Supply voltage range for ADC1, Analog		1.710	1.800	1.890	V
VDDSHV1	Supply voltage range for dual-voltage IO domain	1.8-V operation	1.710	1.800	1.890	V
		3.3-V operation	3.135	3.300	3.465	
VDDSHV2	Supply voltage range for dual-voltage IO domain	1.8-V operation	1.710	1.800	1.890	V
		3.3-V operation	3.135	3.300	3.465	
VDDSHV3	Supply voltage range for dual-voltage IO domain	1.8-V operation	1.710	1.800	1.890	V
		3.3-V operation	3.135	3.300	3.465	
VDDSHV5	Supply voltage range for CLKOUT voltage domain	1.8-V operation	1.710	1.800	1.890	V
		3.3-V operation	3.135	3.300	3.465	
VDDSHV6	Supply voltage range for dual-voltage IO domain	1.8-V operation	1.710	1.800	1.890	V
		3.3-V operation	3.135	3.300	3.465	
VDDSHV7	Supply voltage range for dual-voltage IO domain	1.8-V operation	1.710	1.800	1.890	V
		3.3-V operation	3.135	3.300	3.465	
VDDSHV8	Supply voltage range for dual-voltage IO domain	1.8-V operation	1.710	1.800	1.890	V
		3.3-V operation	3.135	3.300	3.465	
VDDSHV9	Supply voltage range for dual-voltage IO domain	1.8-V operation	1.710	1.800	1.890	V
		3.3-V operation	3.135	3.300	3.465	
VDDSHV10	Supply voltage range for dual-voltage IO domain	1.8-V operation	1.710	1.800	1.890	V
		3.3-V operation	3.135	3.300	3.465	
VDDSHV11	Supply voltage range for dual-voltage IO domain	1.8-V operation	1.710	1.800	1.890	V
		3.3-V operation	3.135	3.300	3.465	
DDR_VREF	Supply voltage range for the DDR3/DDR3L HSTL, LPDDR2 HSUL_12 reference input		0.49 × VDDS_DDR	0.50 × VDDS_DDR	0.51 × VDDS_DDR	V
VDDS3P3V_IOLDO	Supply voltage range for the dual-voltage IO LDO		3.135	3.3	3.465	V
VDDS_CLKOUT	Supply voltage range for CLKOUT domain		1.71	1.8	1.89	V

Recommended Operating Conditions *(continued)*

over junction temperature range (unless otherwise noted)

SUPPLY NAME	DESCRIPTION	MIN	NOM	MAX	UNIT
USB0_VBUS	Voltage range for USB VBUS comparator input	0.000	5.000	5.250	V
USB1_VBUS	Voltage range for USB VBUS comparator input	0.000	5.000	5.250	V
USB0_ID	Voltage range for the USB ID input		(4)		V
USB1_ID	Voltage range for the USB ID input		(4)		V
Operating Temperature Range, T_j	Commercial Temperature	0		90	°C
	Industrial Temperature	–40		90	
	Extended Temperature	–40		105	

(1) This supply is sourced from an internal LDO when RTC_KALDO_ENn is low. If RTC_KALDO_ENn is high, this supply must be sourced from an external power supply.

(2) VDDS should be supplied irrespective of 1.8-V or 3.3-V mode of operation of the dual-voltage IOs.

(3) For more details on power supply requirements, see Section 5.12.2.1.1.

(4) This terminal is connected to analog circuits in the respective USB PHY. The circuit sources a known current while measuring the voltage to determine if the terminal is connected to VSSA_USB with a resistance less than 10 Ω or greater than 100 kΩ. The terminal should be connected to ground for USB host operation or open-circuit for USB peripheral operation, and should never be connected to any external voltage source.

Copyright © 2014–2019, Texas Instruments Incorporated

5.6 Power Consumption Summary

Table 5-4 summarizes the maximum power consumption at each power terminal.

Note: Data in the Maximum Current Ratings table (Table 5-4) represents worst-case power consumption based on various applications of the device using practical operating conditions. The data primarily benefits the power supply designer trying to understand the worst-case power consumption expected from each power rail.

Table 5-4. Maximum Current Ratings at Power Terminals(1)

PARAMETER			MAX	UNIT
SUPPLY NAME	DESCRIPTION			
VDD_CORE	Maximum current rating for the core domain; OPP100		600	mA
	Maximum current rating for the core domain; OPP50		400	mA
VDD_MPU	Maximum current rating for the MPU domain; Nitro	at 1 GHz	1000	mA
	Maximum current rating for the MPU domain; Turbo	at 800 MHz	800	
	Maximum current rating for the MPU domain; OPP120	at 720 MHz	720	
	Maximum current rating for the MPU domain; OPP100	at 600 MHz	600	
	Maximum current rating for the MPU domain; OPP50	at 300 MHz	350	
CAP_VDD_RTC(2)	Maximum current rating for RTC domain and LDO output		2	mA
VDDS_RTC	Maximum current rating for the RTC domain		5	mA
VDDS_DDR	Maximum current rating for DDR IO domain; DDR3/DDR3L		300	mA
	Maximum current rating for DDR IO domain; LPDDR2		150	
VDDS	Maximum current rating for all dual-voltage IO domains		70	mA
VDDS_SRAM_CORE_BG	Maximum current rating for core SRAM LDOs		10	mA
VDDS_SRAM_MPU_BB	Maximum current rating for MPU SRAM LDOs		10	mA
VDDS_PLL_DDR	Maximum current rating for the DPLL DDR		10	mA
VDDS_PLL_CORE_LCD	Maximum current rating for the DPLL CORE, EXTDEV, and LCD		20	mA
VDDS_PLL_MPU	Maximum current rating for the DPLL MPU		10	mA
VDDS_OSC	Maximum current rating for the system oscillator		5	mA
VDDA1P8V_USB0	Maximum current rating for USBPHY 1.8 V and DPLL PER		25	mA
VDDA1P8V_USB1	Maximum current rating for USBPHY 1.8 V		25	mA
VDDA3P3V_USB0	Maximum current rating for USBPHY 3.3 V		40	mA
VDDA3P3V_USB1	Maximum current rating for USBPHY 3.3 V		40	mA
VDDS3P3V_IOLDO	Maximum current rating for the dual-voltage IO LDO		30	mA
VDDA_ADC0	Maximum current rating for ADC0		10	mA
VDDA_ADC1	Maximum current rating for ADC1		10	mA
VDDSHV1	Maximum current rating for dual-voltage IO domain		30	mA
VDDSHV2	Maximum current rating for dual-voltage IO domain		80	mA
VDDSHV3	Maximum current rating for dual-voltage IO domain		100	mA
VDDSHV5	Maximum current rating for dual-voltage IO domain		10	mA
VDDSHV6	Maximum current rating for dual-voltage IO domain		50	mA
VDDSHV7	Maximum current rating for dual-voltage IO domain		10	mA
VDDSHV8	Maximum current rating for dual-voltage IO domain		50	mA
VDDSHV9	Maximum current rating for dual-voltage IO domain		50	mA
VDDSHV10	Maximum current rating for dual-voltage IO domain		50	mA
VDDSHV11	Maximum current rating for dual-voltage IO domain		50	mA
VDDS_CLKOUT	Maximum current rating for CLKOUT domain		10	mA

(1) Current ratings specified in this table are worst-case estimates. Actual application power supply estimates could be lower. For more information, see *AM43xx Power Consumption Summary*.
(2) This supply is sourced from an internal LDO when RTC_KALDO_ENn is low. If RTC_KALDO_ENn is high, this supply must be sourced from an external power supply.

5.7 DC Electrical Characteristics

over recommended ranges of supply voltage and operating temperature (unless otherwise noted)[1]

PARAMETER			MIN	TYP	MAX	UNIT
DDR_CSn[1:0], DDR_CKE[1:0], DDR_CK, DDR_CKn, DDR_CASn, DDR_RASn, DDR_WEn, DDR_BA[2:0], DDR_A[15:0], DDR_ODT[1:0], DDR_D[31:0], DDR_DQM[3:0], DDR_DQS[3:0], DDR_DQSn[3:0] pins (DDR3/DDR3L - HSTL mode)						
V_{IH}	High-level input voltage	VDDS_DDR = 1.5 V	DDR_VREF + 0.1			V
		VDDS_DDR = 1.35 V	DDR_VREF + 0.09			
V_{IL}	Low-level input voltage	VDDS_DDR = 1.5 V			DDR_VREF – 0.1	V
		VDDS_DDR = 1.35 V			DDR_VREF – 0.09	
V_{HYS}	Hysteresis voltage at an input			NA		V
V_{OH}	High-level output voltage, driver enabled, pullup or pulldown disabled	I_{OH} = 8 mA	VDDS_DDR – 0.4			V
V_{OL}	Low-level output voltage, driver enabled, pullup or pulldown disabled	I_{OL} = 8 mA			0.4	V
I_I	Input leakage current, Receiver disabled, pullup or pulldown inhibited		–10		10	µA
	Input leakage current, Receiver disabled, pullup enabled		–240		–40	
	Input leakage current, Receiver disabled, pulldown enabled		40		240	
I_{OZ}	Total leakage current through the terminal connection of a driver-receiver combination that may include a pullup or pulldown. The driver output is disabled and the pullup or pulldown is inhibited.		–10		10	µA
DDR_CSn[1:0], DDR_CKE[1:0], DDR_CK, DDR_CKn, DDR_CASn, DDR_RASn, DDR_WEn, DDR_BA[2:0], DDR_A[15:0], DDR_D[31:0], DDR_DQM[3:0], DDR_DQS[3:0], DDR_DQSn[3:0] pins (LPDDR2 - HSUL_12 mode)[2]						
V_{IH}	High-level input voltage	VDDS_DDR = 1.2 V	DDR_VREF + 0.13			V
V_{IL}	Low-level input voltage	VDDS_DDR = 1.2 V			DDR_VREF – 0.13	V
V_{HYS}	Hysteresis voltage at an input			NA		V
V_{OH}	High-level output voltage, driver enabled, pullup or pulldown disabled	I_{OH} = 8 mA	VDDS_DDR – 0.4			V
V_{OL}	Low-level output voltage, driver enabled, pullup or pulldown disabled	I_{OL} = 8 mA			0.4	V
I_I	Input leakage current, Receiver disabled, pullup or pulldown inhibited		–10		10	µA
	Input leakage current, Receiver disabled, pullup enabled		–240		–40	
	Input leakage current, Receiver disabled, pulldown enabled		40		240	
I_{OZ}	Total leakage current through the terminal connection of a driver-receiver combination that may include a pullup or pulldown. The driver output is disabled and the pullup or pulldown is inhibited.		–10		10	µA
DDR_RESETn[3]						
V_{IH}	High-level input voltage			NA		
V_{IL}	Low-level input voltage			NA		
V_{HYS}	Hysteresis voltage at an input			NA		
V_{OH}	High-level output voltage, driver enabled, pullup or pulldown disabled	I_{OH} = 8 mA	VDDS_DDR – 0.4			V
V_{OL}	Low-level output voltage, driver enabled, pullup or pulldown disabled	I_{OL} = 8 mA			0.4	V
I_I	Input leakage current, Receiver disabled, pullup or pulldown inhibited		–10		10	µA
	Input leakage current, Receiver disabled, pullup enabled		–240		–24	
	Input leakage current, Receiver disabled, pulldown enabled		24		240	

Copyright © 2014–2019, Texas Instruments Incorporated

DC Electrical Characteristics *(continued)*

over recommended ranges of supply voltage and operating temperature (unless otherwise noted)[1]

PARAMETER			MIN	TYP	MAX	UNIT
I_{OZ}	Total leakage current through the terminal connection of a driver-receiver combination that may include a pullup or pulldown. The driver output is disabled and the pullup or pulldown is inhibited.		–10		10	µA
RTC_PWRONRSTn						
V_{IH}	High-level input voltage		0.65 × VDDS_RTC			V
V_{IL}	Low-level input voltage				0.35 × VDDS_RTC	V
V_{HYS}	Hysteresis voltage at an input		0.065			V
I_I	Input leakage current		–1		1	µA
RTC_PMIC_EN						
V_{OH}	High-level output voltage, driver enabled, pullup or pulldown disabled	I_{OH} = 6 mA	VDDS_RTC – 0.45			V
V_{OL}	Low-level output voltage, driver enabled, pullup or pulldown disabled	I_{OL} = 6 mA			0.45	V
I_I	Input leakage current, Receiver disabled, pullup or pulldown inhibited		–1		1	µA
	Input leakage current, Receiver disabled, pullup enabled		–200		–40	
	Input leakage current, Receiver disabled, pulldown enabled		40		200	
I_{OZ}	Total leakage current through the terminal connection of a driver-receiver combination that may include a pullup or pulldown. The driver output is disabled and the pullup or pulldown is inhibited.		–1		1	µA
RTC_WAKEUP						
V_{IH}	High-level input voltage		0.65 × VDDS_RTC			V
V_{IL}	Low-level input voltage				0.35 × VDDS_RTC	V
V_{HYS}	Hysteresis voltage at an input		0.15			V
I_I	Input leakage current, Receiver disabled, pullup or pulldown inhibited		–1		1	µA
	Input leakage current, Receiver disabled, pullup enabled		–200		–40	
	Input leakage current, Receiver disabled, pulldown enabled		40		200	
TCK (VDDSHV3 = 1.8 V)						
V_{IH}	High-level input voltage		1.45			V
V_{IL}	Low-level input voltage				0.46	V
V_{HYS}	Hysteresis voltage at an input		0.4			V
I_I	Input leakage current, Receiver disabled, pullup or pulldown inhibited		–8		8	µA
	Input leakage current, Receiver disabled, pullup enabled		–161	–100	–52	
	Input leakage current, Receiver disabled, pulldown enabled		52	100	170	
TCK (VDDSHV3 = 3.3 V)						
V_{IH}	High-level input voltage		2.15			V
V_{IL}	Low-level input voltage				0.46	V
V_{HYS}	Hysteresis voltage at an input		0.4			V
I_I	Input leakage current, Receiver disabled, pullup or pulldown inhibited		–18		18	µA
	Input leakage current, Receiver disabled, pullup enabled		–243	–100	–19	
	Input leakage current, Receiver disabled, pulldown enabled		51	110	210	
PWRONRSTn (VDDSHV3 = 1.8 V or 3.3 V)[4]						
V_{IH}	High-level input voltage		1.35			V
V_{IL}	Low-level input voltage				0.5	V

DC Electrical Characteristics *(continued)*

over recommended ranges of supply voltage and operating temperature (unless otherwise noted)[1]

PARAMETER			MIN	TYP	MAX	UNIT
V_{HYS}	Hysteresis voltage at an input		0.07			V
I_I	Input leakage current	V_I = 1.8 V			0.1	µA
		V_I = 3.3 V			2	
All other LVCMOS pins (VDDSHVx = 1.8 V; x=1–11)						
V_{IH}	High-level input voltage		0.65 × VDDSHVx			V
V_{IL}	Low-level input voltage				0.35 × VDDSHVx	V
V_{HYS}	Hysteresis voltage at an input		0.18		0.305	V
V_{OH}	High-level output voltage, driver enabled, pullup or pulldown disabled	I_{OH} = 6 mA	VDDSHVx – 0.45			V
V_{OL}	Low-level output voltage, driver enabled, pullup or pulldown disabled	I_{OL} = 6 mA			0.45	V
I_I	Input leakage current, Receiver disabled, pullup or pulldown inhibited		–8.4		8.4	µA
	Input leakage current, Receiver disabled, pullup enabled		–161	–100	–52	
	Input leakage current, Receiver disabled, pulldown enabled		52	100	170	
I_{OZ}	Total leakage current through the terminal connection of a driver-receiver combination that may include a pullup or pulldown. The driver output is disabled and the pullup or pulldown is inhibited.		–8.4		8.4	µA
All other LVCMOS pins (VDDSHVx = 3.3 V; x=1–11)						
V_{IH}	High-level input voltage		2			V
V_{IL}	Low-level input voltage				0.8	V
V_{HYS}	Hysteresis voltage at an input		0.265		0.44	V
V_{OH}	High-level output voltage, driver enabled, pullup or pulldown disabled	I_{OH} = 6 mA	VDDSHVx – 0.45			V
V_{OL}	Low-level output voltage, driver enabled, pullup or pulldown disabled	I_{OL} = 6 mA			0.45	V
I_I	Input leakage current, Receiver disabled, pullup or pulldown inhibited		–18		18	µA
	Input leakage current, Receiver disabled, pullup enabled		–243	–100	–19	
	Input leakage current, Receiver disabled, pulldown enabled		51	110	210	
I_{OZ}	Total leakage current through the terminal connection of a driver-receiver combination that may include a pullup or pulldown. The driver output is disabled and the pullup or pulldown is inhibited.		–18		18	µA
XTALIN (OSC0)						
V_{IH}	High-level input voltage		0.65 × VDDS_OSC			V
V_{IL}	Low-level input voltage				0.35 × VDDS_OSC	V
RTC_XTALIN (OSC1)						
V_{IH}	High-level input voltage		0.65 × VDDS_RTC			V
V_{IL}	Low-level input voltage				0.35 × VDDS_RTC	V

(1) The interfaces or signals described in this table correspond to the interfaces or signals available in multiplexing mode 0. All interfaces or signals multiplexed on the terminals described in this table have the same DC electrical characteristics.

(2) For mapping to the LPDDR2 interface terminal name, see the *AM437x Sitara Processors Technical Reference Manual*.

(3) The DDR_RESETn terminal supports fail-safe operation.

(4) The input voltage thresholds for this input are not a function of VDDSHV3.

Copyright © 2014–2019, Texas Instruments Incorporated

5.8 ADC0: Touch Screen Controller and Analog-to-Digital Subsystem Electrical Parameters

The touch screen controller (TSC) and analog-to-digital converter (ADC) subsystem (ADC0) contains a single-channel ADC connected to an 8:1 analog multiplexer which operates as a general-purpose ADC with optional support for interleaving TSC conversions for 4-wire, 5-wire, or 8-wire resistive panels. The ADC0 subsystem can be configured for use in one of the following applications:

- 8 general-purpose ADC channels
- 4-wire TSC with 4 general-purpose ADC channels
- 5-wire TSC with 3 general-purpose ADC channels
- 8-wire TSC

Table 5-5 summarizes the ADC0 subsystem electrical parameters.

Table 5-5. ADC0 Electrical Parameters

PARAMETER	TEST CONDITIONS	MIN	NOM	MAX	UNIT
ANALOG INPUT					
ADC0_VREFP[1]		(0.5 × VDDA_ADC0) + 0.25		VDDA_ADC0	V
ADC0_VREFN[1]		0		(0.5 × VDDA_ADC0) – 0.25	V
ADC0_VREFP + ADC0_VREFN			VDDA_ADC0		V
Full-scale Input Range	Internal Voltage Reference	0		VDDA_ADC0	V
	External Voltage Reference	ADC0_VREFN		ADC0_VREFP	
Differential Nonlinearity (DNL)	Internal Voltage Reference: VDDA_ADC0 = 1.8 V External Voltage Reference: VREFP – VREFN = 1.8 V	–1	0.5	1	LSB
Integral Nonlinearity (INL)	Source impedance = 50 Ω Internal Voltage Reference: VDDA_ADC0 = 1.8 V External Voltage Reference: VREFP – VREFN = 1.8 V	–2	±1	2	LSB
	Source Impedance = 1 kΩ Internal Voltage Reference: VDDA_ADC0 = 1.8 V External Voltage Reference: VREFP – VREFN = 1.8 V		±1		
Gain Error	Internal Voltage Reference: VDDA_ADC0 = 1.8 V External Voltage Reference: VREFP – VREFN = 1.8 V		±2		LSB
Offset Error	Internal Voltage Reference: VDDA_ADC0 = 1.8 V External Voltage Reference: VREFP – VREFN = 1.8 V		±2		LSB
Input Sampling Capacitance			5.5		pF
Signal-to-Noise Ratio (SNR)	Internal Voltage Reference: VDDA_ADC0 = 1.8 V External Voltage Reference: VREFP – VREFN = 1.8 V Input Signal: 30 kHz sine wave at –0.5 dB Full Scale		70		dB
Total Harmonic Distortion (THD)	Internal Voltage Reference: VDDA_ADC0 = 1.8 V External Voltage Reference: VREFP – VREFN = 1.8 V Input Signal: 30 kHz sine wave at –0.5 dB Full Scale		75		dB

Copyright © 2014–2019, Texas Instruments Incorporated

Table 5-5. ADC0 Electrical Parameters (continued)

PARAMETER	TEST CONDITIONS	MIN	NOM	MAX	UNIT
Spurious Free Dynamic Range	Internal Voltage Reference: VDDA_ADC0 = 1.8 V External Voltage Reference: VREFP – VREFN = 1.8 V Input Signal: 30 kHz sine wave at –0.5 dB Full Scale		80		dB
Signal-to-Noise Plus Distortion	Internal Voltage Reference: VDDA_ADC0 = 1.8 V External Voltage Reference: VREFP – VREFN = 1.8 V Input Signal: 30 kHz sine wave at –0.5 dB Full Scale		69		dB
VREFP and VREFN Input Impedance			20		kΩ
Input Impedance of AIN[7:0][2]	f = input frequency		[1/((65.97 × 10^{-12}) × f)]		Ω
SAMPLING DYNAMICS					
ADC Clock Frequency				13	MHz
Conversion Time			13		ADC0 clock cycles
Acquisition Time		2		257	ADC0 clock cycles
Sampling Rate[3]	ADC0 Clock = 13 MHz			867	kSPS
Channel-to-Channel Isolation			100		dB
TOUCH SCREEN SWITCH DRIVERS					
Pullup and Pulldown Switch ON-Resistance (Ron)			2		Ω
Pullup and Pulldown Switch Current Leakage Ileak	Source impedance = 500 Ω			0.5	uA
Drive Current				25	mA
Touch Screen Resistance				6	kΩ
Pen Touch Detect				2	kΩ

(1) The ADC0_VREFP and ADC0_VREFN terminals should not be allowed to float to prevent noise from coupling into the ADC. If ADC0_VREFN is not used to connect an external negative voltage reference to the ADC, connect it to VSSA_ADC. If ADC0_VREFP is not used to connect an external positive voltage reference to the ADC, connect it to VSSA_ADC or VDDA_ADC0. Connecting ADC0_VREFP to VSSA_ADC in this use case is the preferred option because VDDA_ADC0 may couple more noise into the ADC than VSSA_ADC.

(2) This parameter is valid when the respective AIN terminal is configured to operate as a general-purpose ADC input.

(3) The maximum sample rate assumes a conversion time of 13 ADC clock cycles with the acquisition time configured for the minimum of 2 ADC clock cycles, where it takes a total of 15 ADC clock cycles to sample the analog input and convert it to a positive binary weighted digital value.

Copyright © 2014–2019, Texas Instruments Incorporated

5.9 VPP Specifications for One-Time Programmable (OTP) eFuses

This section specifies the operating conditions required for programming the OTP eFuses and is applicable only for high-security (AM437xHS) devices.

Table 5-6. Recommended Operating Conditions for OTP eFuse Programming

PARAMETER	DESCRIPTION	MIN	NOM	MAX	UNIT
VDD_CORE	Supply voltage range for the core domain during OTP operation; OPP100	1.056	1.1	1.144	V
VPP	Supply voltage range for the eFuse ROM domain during normal operation		NC		
	Supply voltage range for the eFuse ROM domain during OTP programming (1) (2)	1.65	1.7	1.75	V
I(VPP)				50	mA
Temperature (ambient)		0	30	50	ºC

(1) Supply voltage range includes DC errors and peak-to-peak noise. TI power management solutions TLV70717 from the TLV707x family meet the supply voltage range needed for VPP.
(2) During normal operation, no voltage should be applied to VPP. This can be typically achieved by disabling the regulator attached to the VPP terminal. For more details, see *TLV707, TLV707P 200-mA, Low-IQ, Low-Noise, Low-Dropout Regulator for Portable Devices*.

5.9.1 Hardware Requirements

The following hardware requirements must be met when programming keys in the OTP eFuses:

- The VPP power supply must be disabled when not programming OTP registers.
- The VPP power supply must be ramped up after the proper device power-up sequence (for more details, see Section 5.12.1.2).

5.9.2 Programming Sequence

Programming sequence for OTP eFuses:

1. Power on the board per the power-up sequencing. No voltage should be applied on the VPP terminal during power up and normal operation.
2. Load the OTP write software required to program the eFuse (contact your local TI representative for the OTP software package).
3. Apply the voltage on the VPP terminal according to the specification in Table 5-6.
4. Run the software that programs the OTP registers.
5. After validating the content of the OTP registers, remove the voltage from the VPP terminal.

5.9.3 Impact to Your Hardware Warranty

You recognize and accept at your own risk that your use of eFuse permanently alters the TI device. You acknowledge that eFuse can fail due to incorrect operating conditions or programming sequence. Such a failure may render the TI device inoperable and TI will be unable to confirm the TI device conformed to TI device specifications prior to the attempted eFuse. CONSEQUENTLY, TI WILL HAVE NO LIABILITY FOR ANY TI DEVICES THAT HAVE BEEN eFUSED.

5.10 Thermal Resistance Characteristics

Failure to maintain a junction temperature within the range specified in Section 5.5 reduces operating lifetime, reliability, and performance—and may cause irreversible damage to the system. Therefore, the product design cycle should include thermal analysis to verify the maximum operating junction temperature of the device. It is important this thermal analysis is performed using specific system use cases and conditions. TI provides an application report to aid users in overcoming some of the existing challenges of producing a good thermal design. For more information, see AM43xx Thermal Considerations.

Table 5-7 provides thermal characteristics for the packages used on this device.

NOTE

This table provides simulation data and may not represent actual use-case values.

Table 5-7. Thermal Resistance Characteristics (NFBGA Package) [ZDN]

over operating free-air temperature range (unless otherwise noted)

NAME	DESCRIPTION	ZDN (°C/W)(1) (2)	AIR FLOW (m/s)(1) (3)
$R\Theta_{JC}$	Junction-to-case	7.07	NA
$R\Theta_{JB}$	Junction-to-board	11.11	NA
$R\Theta_{JA}$	Junction-to-free air	23.0	0.0
		19.5	0.5
		18.5	1.0
		17.5	2.0
		16.9	3.0
Psi_{JT}	Junction-to-package top	2.10	0.0
		2.16	0.5
		2.20	1.0
		2.27	2.0
		2.31	3.0
Psi_{JB}	Junction-to-board	11.59	0.0
		11.18	0.5
		11.05	1.0
		10.91	2.0
		10.80	3.0

(1) These values are based on a JEDEC-defined 2S2P system (with the exception of the Theta JC [$R\Theta_{JC}$] value, which is based on a JEDEC-defined 1S0P system) and will change based on environment as well as application. For more information, see these EIA/JEDEC standards:
- JESD51-2, *Integrated Circuits Thermal Test Method Environmental Conditions - Natural Convection (Still Air)*
- JESD51-3, *Low Effective Thermal Conductivity Test Board for Leaded Surface Mount Packages*
- JESD51-7, *High Effective Thermal Conductivity Test Board for Leaded Surface Mount Packages*
- JESD51-9, *Test Boards for Area Array Surface Mount Package Thermal Measurements*

Power dissipation of 2 W and an ambient temperature of 70ºC is assumed.

(2) °C/W = degrees Celsius per watt.

(3) m/s = meters per second.

Copyright © 2014–2019, Texas Instruments Incorporated

5.11 External Capacitors

To improve module performance, decoupling capacitors are required to suppress the switching noise generated by high frequency and to stabilize the supply voltage. A decoupling capacitor is most effective when it is close to the device, because this minimizes the inductance of the circuit board wiring and interconnects.

5.11.1 Voltage Decoupling Capacitors

Table 5-8 summarizes the Core voltage decoupling characteristics.

5.11.1.1 Core Voltage Decoupling Capacitors

To improve module performance, decoupling capacitors are required to suppress high-frequency switching noise and to stabilize the supply voltage. A decoupling capacitor is most effective when located close to the device, because this minimizes the inductance of the circuit board wiring and interconnects.

Table 5-8. Core Voltage Decoupling Characteristics

PARAMETER	TYP	UNIT
C_{VDD_CORE} (1)	10.08	µF
C_{VDD_MPU} (2)	10.05	µF

(1) The typical value corresponds to 1 capacitor of 10 µF and 8 capacitors of 10 nF.

(2) The typical value corresponds to 1 capacitor of 10 µF and 5 capacitors of 10 nF.

5.11.1.2 IO and Analog Voltage Decoupling Capacitors

Table 5-9 summarizes the power-supply decoupling capacitor recommendations.

Table 5-9. Power-Supply Decoupling Capacitor Characteristics

PARAMETER	TYP	UNIT
C_{VDDA_ADC0}	10	nF
C_{VDDA_ADC1}	10	nF
$C_{VDDA1P8V_USB0}$ (1)	2.21	µF
$C_{CVDDA3P3V_USB0}$	10	nF
$C_{VDDA1P8V_USB1}$	10	nF
$C_{VDDA3P3V_USB1}$	10	nF
C_{VDDS} (2)	10.04	µF
C_{VDDS_DDR}	(3)	
C_{VDDS_OSC}	10	nF
$C_{VDDS_PLL_DDR}$	10	nF
$C_{VDDS_PLL_CORE_LCD}$	10	nF
$C_{VDDS_SRAM_CORE_BG}$ (4)	10.01	µF
$C_{VDDS_SRAM_MPU_BB}$ (5)	10.01	µF
$C_{VDDS_PLL_MPU}$	10	nF
C_{VDDS_RTC}	10	nF
C_{VDDS_CLKOUT}	10	nF
$C_{VDDS3P3V_IOLDO}$	10	nF
$C_{VDDSHV1}$ (6)	10.02	µF
$C_{VDDSHV2}$ (7)	10.06	µF
$C_{VDDSHV3}$ (7)	10.06	µF
$C_{VDDSHV5}$ (6)	10.02	µF
$C_{VDDSHV6}$ (7)	10.06	µF
$C_{VDDSHV7}$ (6)	10.02	µF

Table 5-9. Power-Supply Decoupling Capacitor Characteristics (continued)

PARAMETER	TYP	UNIT
$C_{VDDSHV8}$ (6)	10.02	µF
$C_{VDDSHV9}$ (6)	10.02	µF
$C_{VDDSHV10}$ (6)	10.02	µF
$C_{VDDSHV11}$ (6)	10.02	µF

(1) Typical values consist of 1 capacitor of 2.2 µF and 1 capacitor of 10 nF.

(2) Typical values consist of 1 capacitor of 10 µF and 4 capacitors of 10 nF.

(3) For more details on decoupling capacitor requirements for the DDR3 and DDR3L memory interface, see Section 5.12.8.2.1.3.6 and Section 5.12.8.2.1.3.7 when using DDR3 and DDR3L memory devices.

(4) VDDS_SRAM_CORE_BG supply powers an internal LDO for SRAM supplies. Inrush currents could cause voltage drop on the VDDS_SRAM_CORE_BG supplies when the SRAM LDO is enabled after powering up VDDS_SRAM_CORE_BG terminals. TI recommends placing a 10-µF capacitor close to the terminal and routing it with the widest traces possible to minimize the voltage drop on VDDS_SRAM_CORE_BG terminals.

(5) VDDS_SRAM_MPU_BB supply powers an internal LDO for SRAM supplies. Inrush currents could cause voltage drop on the VDDS_SRAM_MPU_BB supplies when the SRAM LDO is enabled after powering up VDDS_SRAM_MPU_BB terminals. TI recommends placing a 10-µF capacitor close to the terminal and routing it with the widest traces possible to minimize the voltage drop on VDDS_SRAM_MPU_BB terminals.

(6) Typical values consist of 1 capacitor of 10 µF and 2 capacitors of 10 nF.

(7) Typical values consist of 1 capacitor of 10 µF and 6 capacitors of 10 nF.

5.11.2 Output Capacitors

Internal low dropout output (LDO) regulators require external capacitors to stabilize their outputs. These capacitors should be placed as close as possible to the respective terminals of the device. Table 5-10 summarizes the LDO output capacitor recommendations.

Table 5-10. Output Capacitor Characteristics

PARAMETER	TYP	UNIT
$C_{CAP_VDD_SRAM_CORE}$ (1)	1	µF
$C_{CAP_VDD_RTC}$ (1)(2)	1	µF
$C_{CAP_VDD_SRAM_MPU}$ (1)	1	µF
$C_{CAP_VBB_MPU}$ (1)	1	µF
$C_{CAP_VDDS1P8V_IOLDO}$ (1)(3)	2.2	µF

(1) LDO regulator outputs should not be used as a power source for any external components.
(2) The CAP_VDD_RTC terminal operates as an input to the RTC core voltage domain when the RTC_KALDO_ENn terminal is high.
(3) The CAP_VDDS1P8V_IOLDO terminal is the output of the IO LDO and required for simplified power sequencing. For more details, see Figure 5-8. If simplified power sequencing is not used, this terminal can be left floating.

Copyright © 2014–2019, Texas Instruments Incorporated

Figure 5-2 shows an example of the external capacitors.

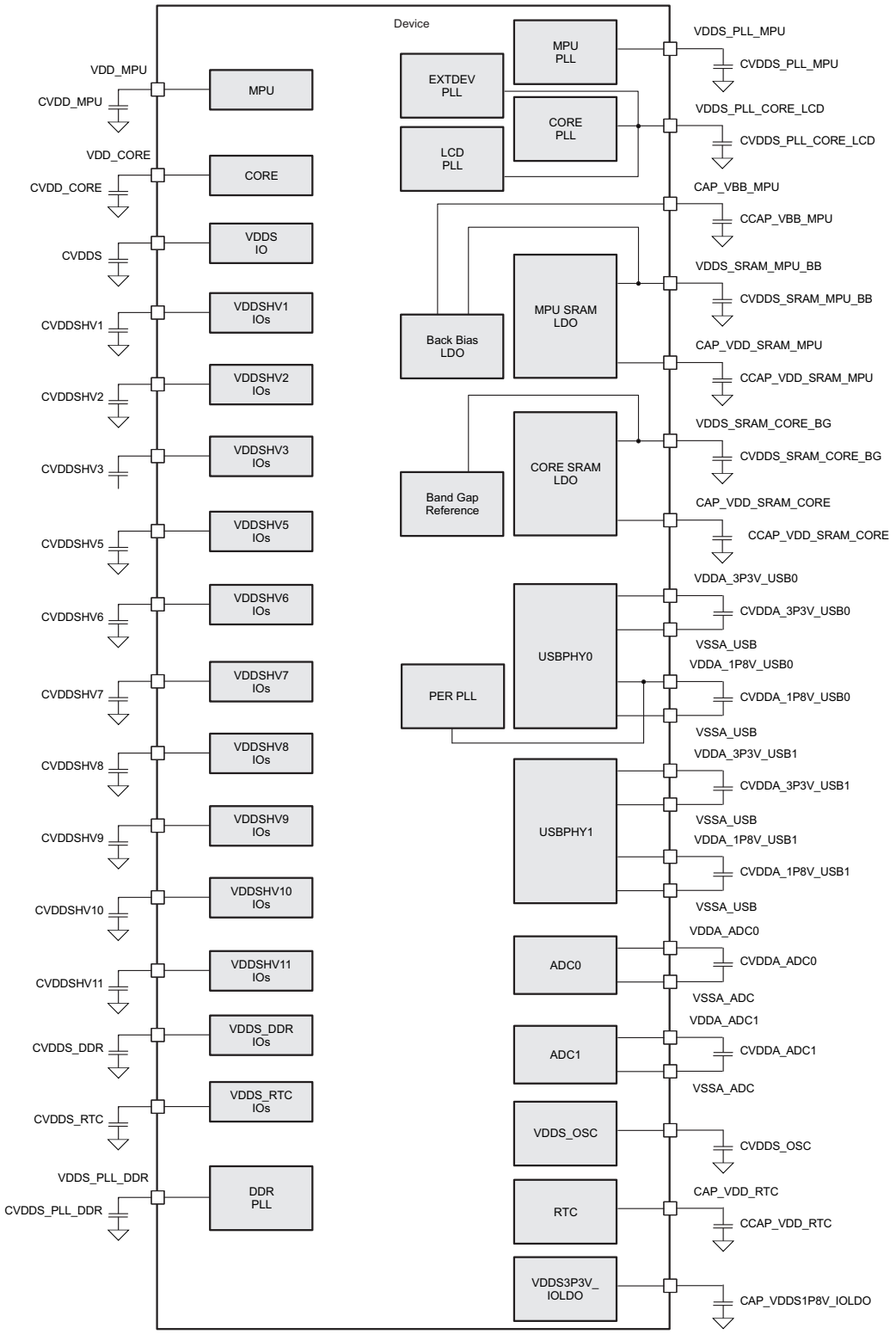

A. Decoupling capacitors must be placed as closed as possible to the power terminal. Choose the ground closest to the power pin for each decoupling capacitor. In case of interconnecting powers, first insert the decoupling capacitor and then interconnect the powers.

B. The decoupling capacitor value depends on the board characteristics.

Figure 5-2. External Capacitors

5.12 Timing and Switching Characteristics

The data provided in the following timing requirements and switching characteristics tables assumes the device is operating within the recommended operating conditions defined in Section 5.5, unless otherwise noted.

5.12.1 Power Supply Sequencing

5.12.1.1 Power Supply Slew Rate Requirement

To maintain the safe operating range of the internal ESD protection devices, TI recommends limiting the maximum slew rate of supplies to be less than 1.0E + 5 V/s. For instance, as shown in Figure 5-3, TI recommends having the supply ramp slew for a 1.8-V supply of more than 18 µs.

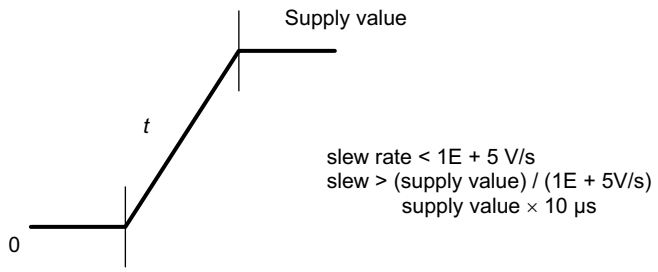

Figure 5-3. Power Supply Slew and Slew Rate

Copyright © 2014–2019, Texas Instruments Incorporated

5.12.1.2 Power-Up Sequencing

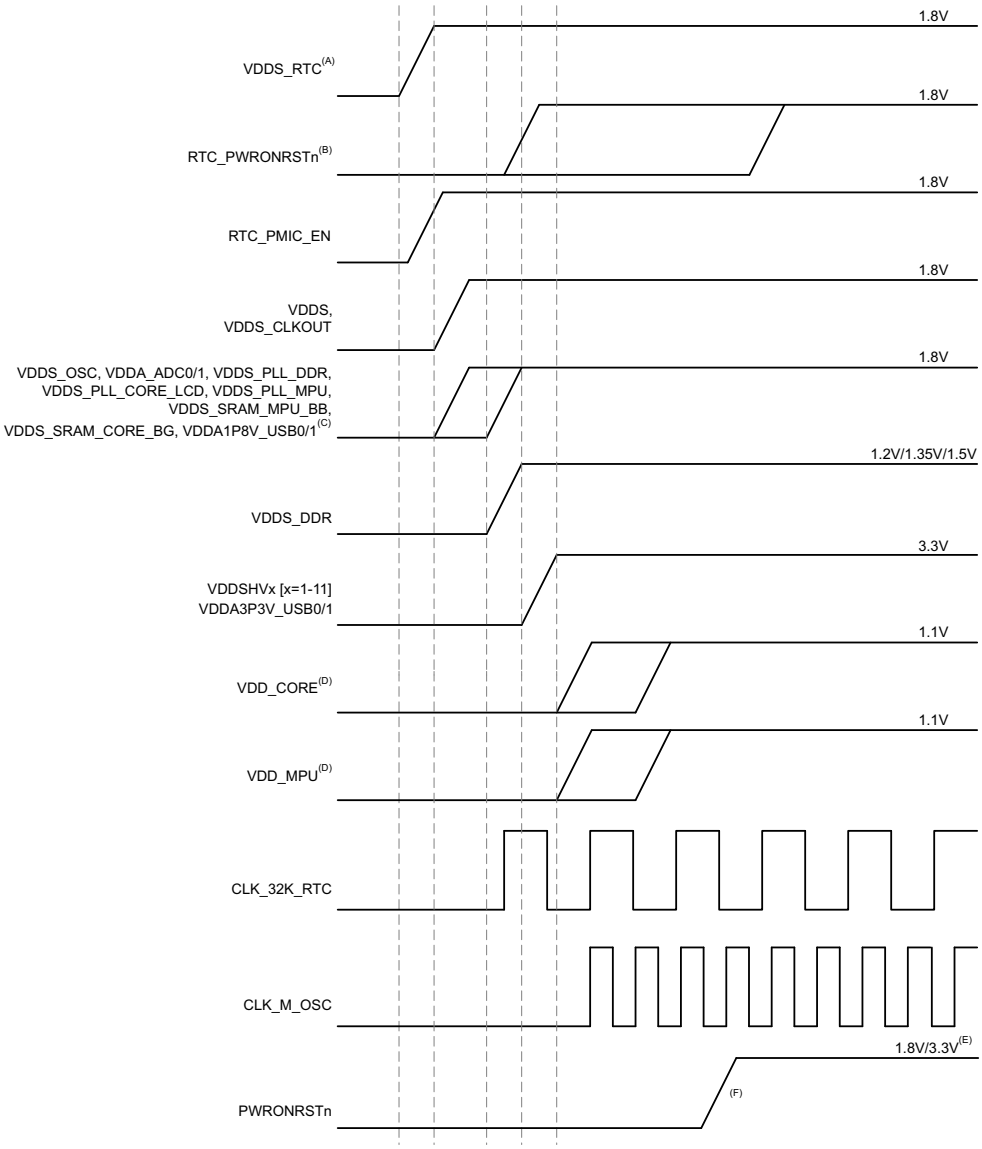

A. The CAP_VDD_RTC terminal operates as an input to the RTC core voltage domain when the internal RTC LDO is disabled by connecting the RTC_KALDO_ENn terminal to VDDS_RTC.
If the internal RTC LDO is disabled, CAP_VDD_RTC should be sourced from an external 1.1-V power supply. If CAP_VDD_RTC is ramped after VDD_CORE, there might be a small amount of additional leakage current on VDD_CORE.
VDDS_RTC can be ramped independent of other supplies if RTC_PMIC_EN functionality is not required. If VDDS_RTC is ramped after VDD_CORE when internal RTC LDO is enabled, there might be a small amount of leakage current on VDD_CORE.

B. RTC_PWRONRSTn should be asserted for at least 1 ms and can be released before the 32-kHz clock is stable.

C. These supplies can be ramped together with VDDS, VDDS_CLKOUT supplies if powered from the same source only. If a USB port is not used, the respective VDDA1P8V_USB may be connected to any 1.8-V power supply and the respective VDDA3P3V_USB terminal may be connected to any 3.3-V power supply. If a system does not have a 3.3-V supply, the VDDA3P3V_USB may be connected to ground.

D. VDD_MPU and VDD_CORE can be supplied from the same power source if OPPs higher than OPP100 are not used.

E. PWRONRSTn input voltage thresholds are not dependent on VDDSHV3 voltage and the terminal is not fail-safe. PWRONRSTn can accept 1.8-V or 3.3-V input levels when VDDSHV3 is configured as 3.3 V. However, PWRONRSTn can only accept 1.8 V input levels when VDDSHV3 is configured as 1.8 V. For details on this input terminal, see Section 5.7.

F. It is required to hold the PWRONRSTn terminal low until all the supplies have ramped and the input clock CLK_M_OSC is stable.

Figure 5-4. Power Sequencing With RTC Feature Enabled, All Dual-Voltage IOs Configured as 3.3 V

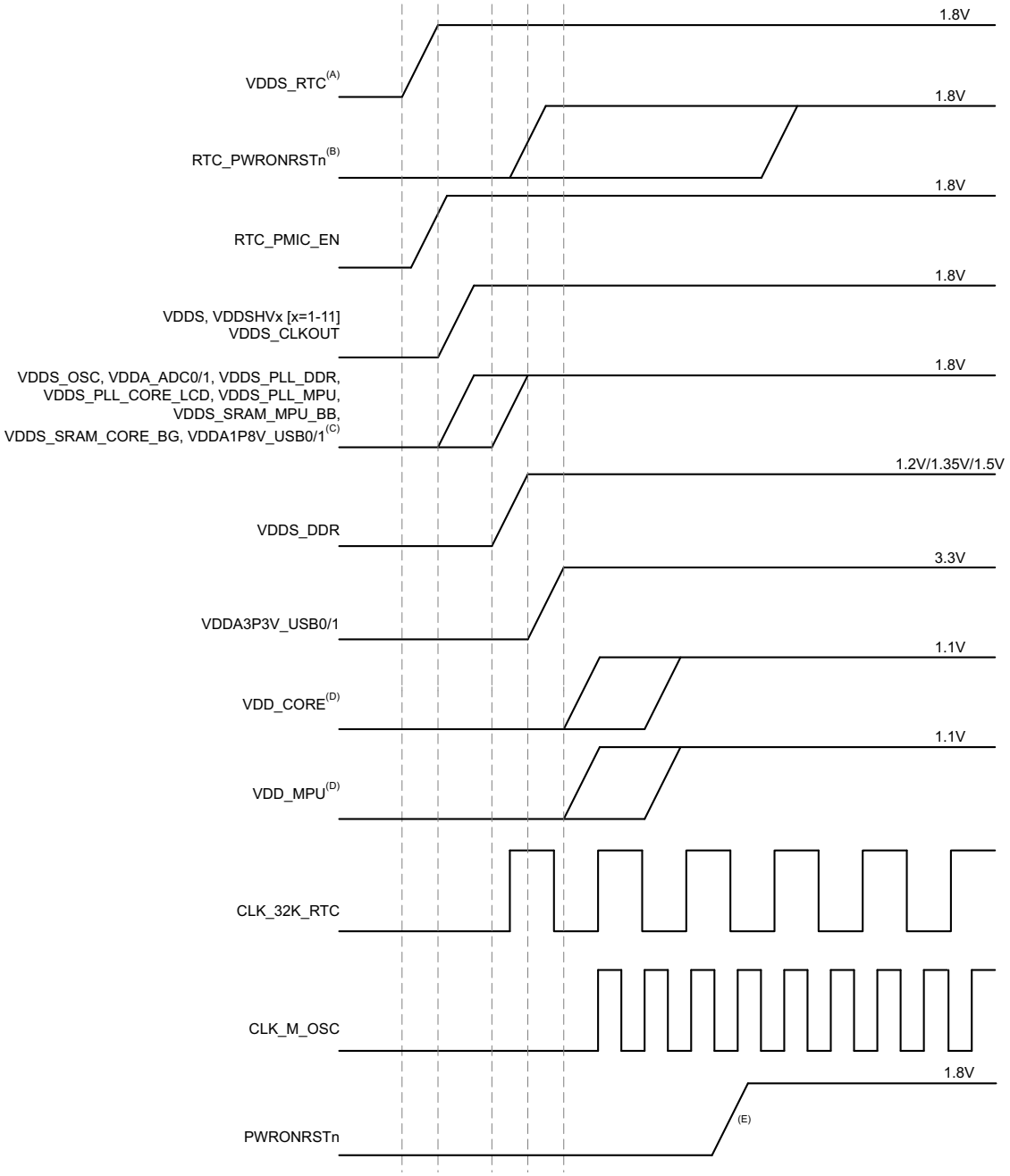

A. The CAP_VDD_RTC terminal operates as an input to the RTC core voltage domain when the internal RTC LDO is disabled by connecting the RTC_KALDO_ENn terminal to VDDS_RTC.
If the internal RTC LDO is disabled, CAP_VDD_RTC should be sourced from an external 1.1-V power supply. If CAP_VDD_RTC is ramped after VDD_CORE, there might be a small amount of additional leakage current on VDD_CORE.

B. RTC_PWRONRSTn should be asserted for at least 1 ms and can be released before the 32-kHz clock is stable.

C. These supplies can be ramped together with the VDDS, VDDSHVx [x=1-11], VDDS_CLKOUT supplies if powered from the same source.
If a USB port is not used, the respective VDDA1P8V_USB may be connected to any 1.8-V power supply and the respective VDDA3P3V_USB terminal may be connected to any 3.3-V power supply. If a system does not have a 3.3-V supply, the VDDA3P3V_USB may be connected to ground.

D. VDD_MPU and VDD_CORE can be supplied from the same power source if OPPs higher than OPP100 are not used.

E. It is required to hold the PWRONRSTn terminal low until all the supplies have ramped and the input clock CLK_M_OSC is stable.

Figure 5-5. Power Sequencing With RTC Feature Enabled, All Dual-Voltage IOs Configured as 1.8 V

Copyright © 2014–2019, Texas Instruments Incorporated

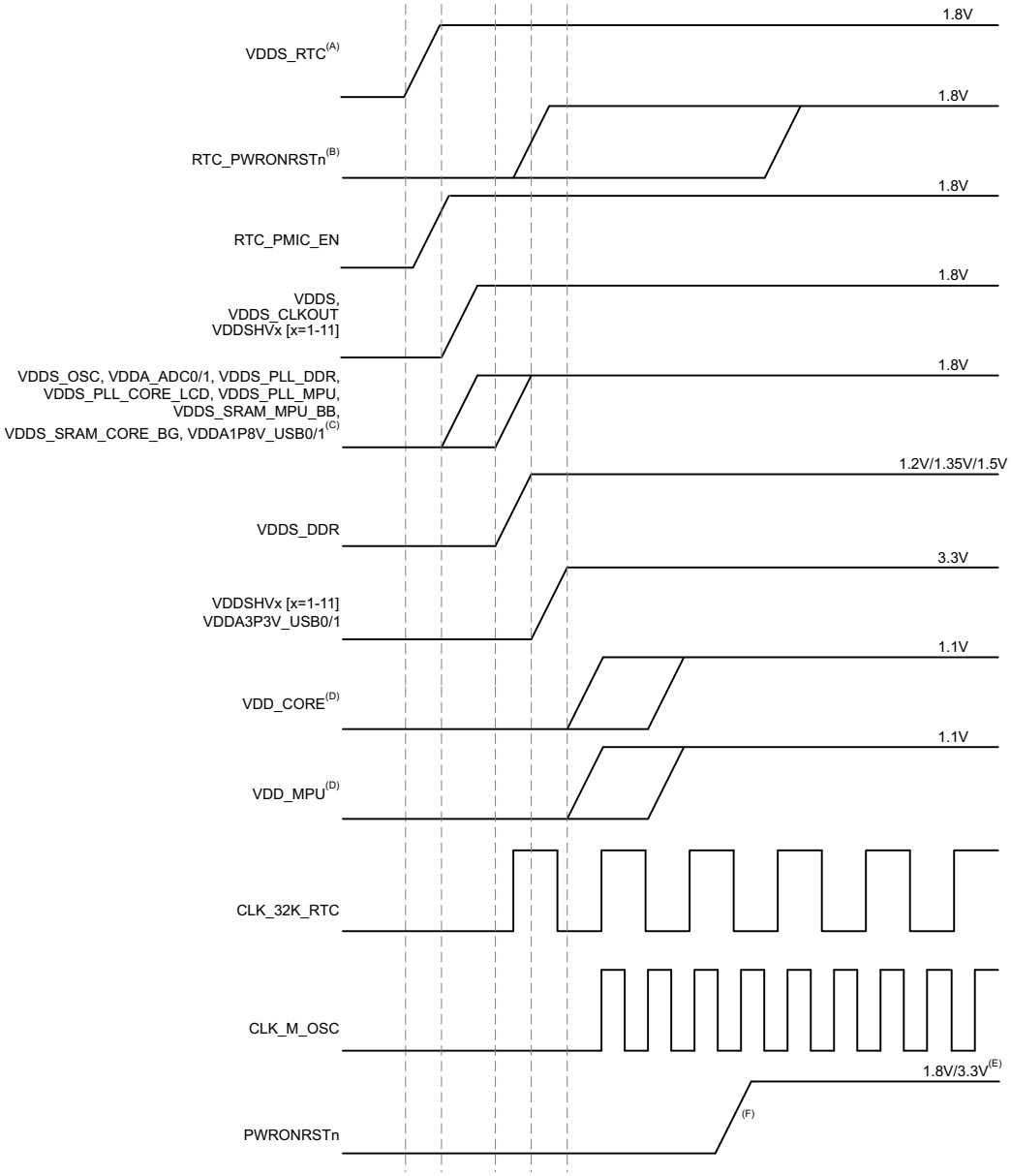

A. The CAP_VDD_RTC terminal operates as an input to the RTC core voltage domain when the internal RTC LDO is disabled by connecting the RTC_KALDO_ENn terminal to VDDS_RTC.
If the internal RTC LDO is disabled, CAP_VDD_RTC should be sourced from an external 1.1-V power supply. If CAP_VDD_RTC is ramped after VDD_CORE, there might be a small amount of additional leakage current on VDD_CORE.

B. RTC_PWRONRSTn should be asserted for at least 1 ms and can be released before the 32-kHz clock is stable.

C. These supplies can be ramped together with the VDDS, VDDSHVx [x=1-11], VDDS_CLKOUT supplies if powered from the same source.
If a USB port is not used, the respective VDDA1P8V_USB may be connected to any 1.8-V power supply and the respective VDDA3P3V_USB terminal may be connected to any 3.3-V power supply. If a system does not have a 3.3-V supply, the VDDA3P3V_USB may be connected to ground.

D. VDD_MPU and VDD_CORE can be supplied from the same power source if OPPs higher than OPP100 are not used.

E. PWRONRSTn input voltage thresholds are not dependent on VDDSHV3 voltage and the terminal is not fail-safe. PWRONRSTn can accept 1.8-V or 3.3-V input levels when VDDSHV3 is configured as 3.3 V. However, PWRONRSTn can only accept 1.8 V input levels when VDDSHV3 is configured as 1.8 V. For details on this input terminal, see Section 5.7.

F. It is required to hold the PWRONRSTn terminal low until all the supplies have ramped and the input clock CLK_M_OSC is stable.

Figure 5-6. Power Sequencing With RTC Feature Enabled, Dual-Voltage IOs Configured as 1.8 V, 3.3 V

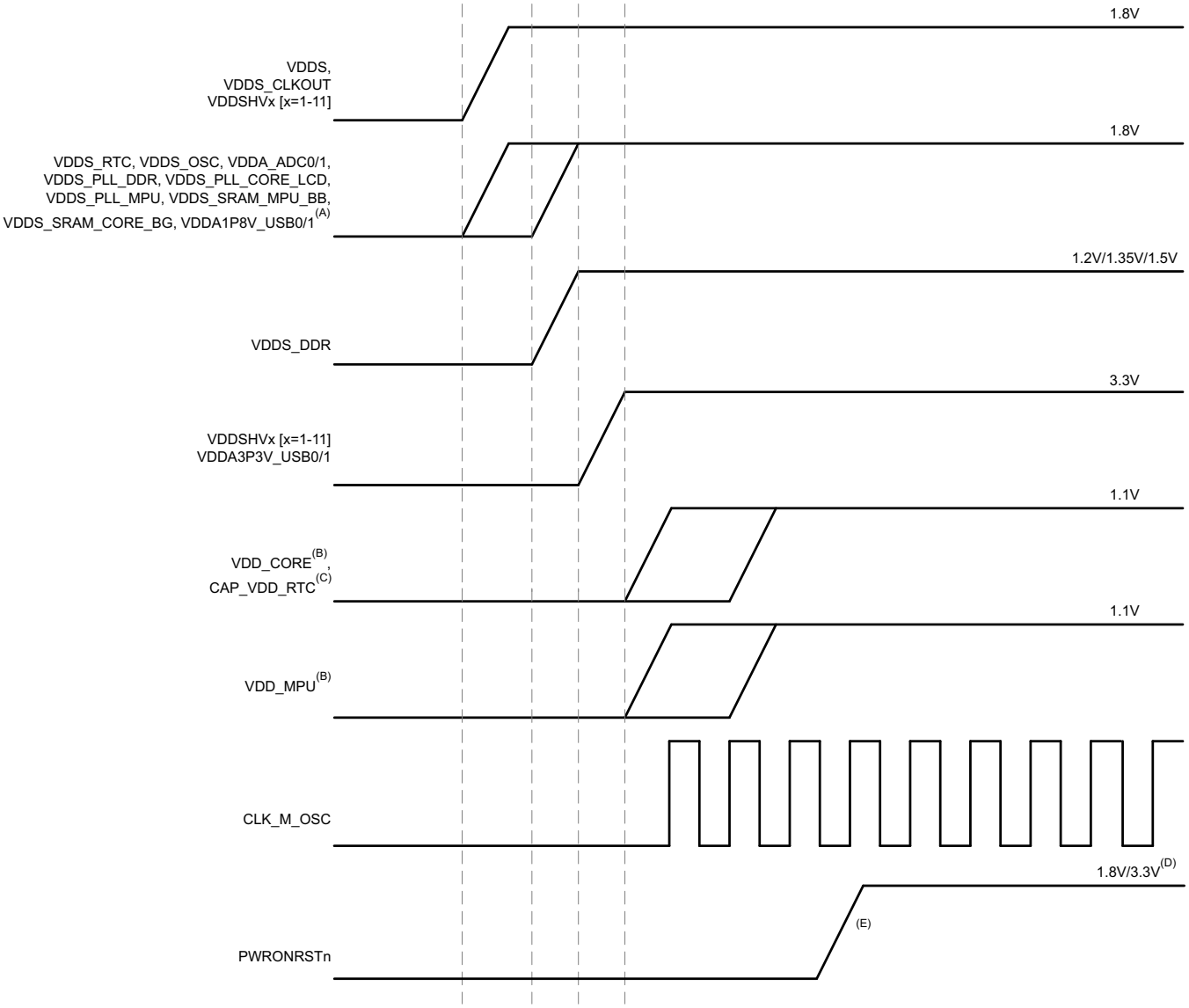

A. These supplies can be ramped together with the VDDS, VDDSHVx [x=1-11], VDDS_CLKOUT supplies if powered from the same source.
If a USB port is not used, the repsective VDDA1P8V_USB may be connected to any 1.8-V power supply and the respective VDDA3P3V_USB terminal may be connected to any 3.3-V power supply. If a system does not have a 3.3-V supply, the VDDA3P3V_USB may be connected to ground.

B. VDD_MPU and VDD_CORE can be supplied from the same power source if OPPs higher than OPP100 are not used.

C. The CAP_VDD_RTC terminal operates as an input to the RTC core voltage domain when the internal RTC LDO is disabled by connecting the RTC_KALDO_ENn terminal to VDDS_RTC.
If the internal RTC LDO is disabled, CAP_VDD_RTC should be sourced from an external 1.1-V power supply. If CAP_VDD_RTC is ramped after VDD_CORE, there might be a small amount of additional leakage current on VDD_CORE.
VDDS_RTC can be ramped independent of other supplies if RTC_PMIC_EN functionality is not required. If VDDS_RTC is ramped after VDD_CORE when internal RTC LDO is enabled, there might be a small amount of leakage current on VDD_CORE.

D. PWRONRSTn input voltage thresholds are not dependent on VDDSHV3 voltage and the terminal is not fail-safe. PWRONRSTn can accept 1.8-V or 3.3-V input levels when VDDSHV3 is configured as 3.3 V. However, PWRONRSTn can only accept 1.8 V input levels when VDDSHV3 is configured as 1.8 V. For details on this input terminal, see Section 5.7.

E. It is required to hold the PWRONRSTn terminal low until all the supplies have ramped and the input clock CLK_M_OSC is stable.

Figure 5-7. Power Sequencing With RTC Feature Disabled, Dual-Voltage IOs Configured as 1.8 V, 3.3 V

Copyright © 2014–2019, Texas Instruments Incorporated

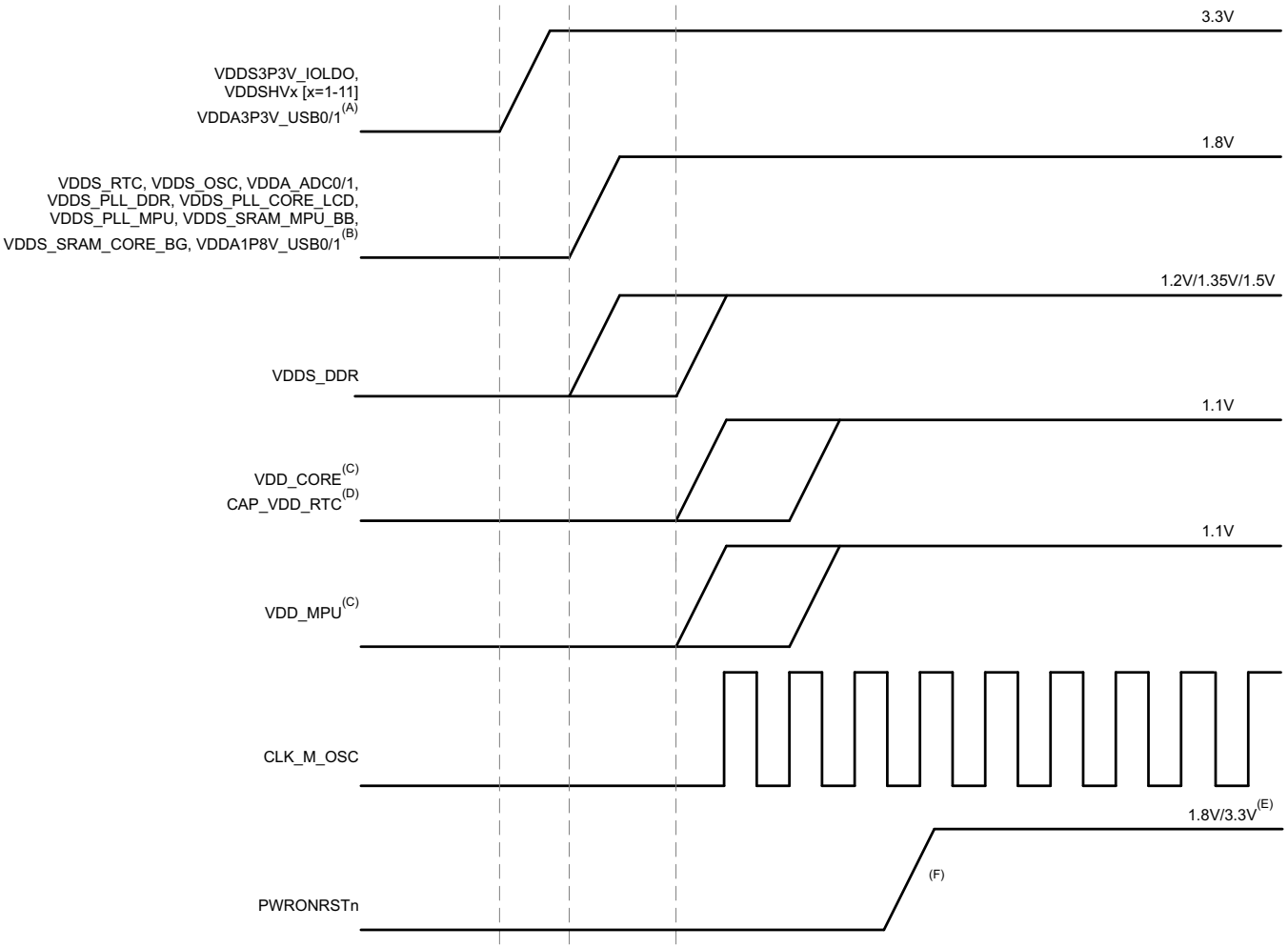

A. Power source supplying VDDS3P3V_IOLDO should have a supply slew of >100us.
CAP_VDDS1P8V_IOLDO is the 1.8-V output of VDDA3P3V_IOLDO. VDDS, VDDS_CLKOUT terminals are powered by shorting them to CAP_VDDS1P8V_IOLDO on the board.

B. If a USB port is not used, the repsective VDDA1P8V_USB may be connected to any 1.8-V power supply and the respective VDDA3P3V_USB terminal may be connected to any 3.3-V power supply. If a system does not have a 3.3-V supply, the VDDA3P3V_USB may be connected to ground.

C. VDD_MPU and VDD_CORE can be supplied from the same power source if OPPs higher than OPP100 are not used.

D. The CAP_VDD_RTC terminal operates as an input to the RTC core voltage domain when the internal RTC LDO is disabled by connecting the RTC_KALDO_ENn terminal to VDDS_RTC.
If the internal RTC LDO is disabled, CAP_VDD_RTC should be sourced from an external 1.1-V power supply. If CAP_VDD_RTC is ramped after VDD_CORE, there might be a small amount of additional leakage current on VDD_CORE.
VDDS_RTC can be ramped independent of other supplies if RTC_PMIC_EN functionality is not required. If VDDS_RTC is ramped after VDD_CORE when internal RTC LDO is enabled, there might be a small amount of leakage current on VDD_CORE.

E. PWRONRSTn input voltage thresholds are not dependent on VDDSHV3 voltage and the terminal is not fail-safe. PWRONRSTn can accept 1.8-V or 3.3-V input levels when VDDSHV3 is configured as 3.3 V. However, PWRONRSTn can only accept 1.8 V input levels when VDDSHV3 is configured as 1.8 V. For details on this input terminal, see Section 5.7.

F. The PWRONRSTn terminal must be held low until all the supplies have ramped and the input clock CLK_M_OSC is stable.

Figure 5-8. Simplified Power Sequencing With RTC Feature Disabled, Dual-Voltage IOs Configured as 3.3 V

5.12.1.3 Power-Down Sequencing

PWRONRSTn input terminal should be taken low, which stops all internal clocks before power supplies are turned off. All other external clocks to the device should be shut off.

The preferred way to sequence power down is to have all the power supplies ramped down sequentially in the exact reverse order of the power-up sequencing. In other words, the power supply that has been ramped up first should be the last one that is ramped down. This ensures there would be no spurious current paths during the power-down sequence. The VDDS, VDDS_CLKOUT power supply must ramp down after all 3.3-V VDDSHVx [x=1-11] power supplies.

If it is desired to ramp down VDDS, VDDS_CLKOUT and VDDSHVx [x=1-11] simultaneously, it should always be ensured that the difference between VDDS, VDDS_CLKOUT and VDDSHVx [x=1-11] during the entire power-down sequence is <2 V. Any violation of this could cause reliability risks for the device. Further, it is recommended to maintain VDDS, VDDS_CLKOUT ≥1.5V as all the other supplies fully ramp down to minimize in-rush currents.

If none of the VDDSHVx [x=1-11] power supplies are configured as 3.3 V, the VDDS, VDDS_CLKOUT power supply may ramp down along with the VDDSHVx [x=1-11] supplies or after all the VDDSHVx [x=1-11] supplies have ramped down. TI recommends maintaining VDDS, VDDS_CLKOUT ≥1.5V as all the other supplies fully ramp down to minimize in-rush currents.

When using simplified power-down sequence, there are no power-down requirements between the VDDS, VDDS_CLKOUT and VDDSHVx [x=1-11] supplies and are ramped down together without any reliability concerns.

Copyright © 2014–2019, Texas Instruments Incorporated

5.12.2 Clock

5.12.2.1 PLLs

5.12.2.1.1 Digital Phase-Locked Loop Power Supply Requirements

The digital phase-locked loop (DPLL) provides all interface clocks and functional clocks to the processor of the device. The device integrates six different DPLLs:

- Core DPLL
- Per DPLL
- Display DPLL
- DDR DPLL
- MPU DPLL
- EXTDEV DPLL

Figure 5-9 shows the power supply connectivity implemented in the device. Table 5-11 provides the power supply requirements for the DPLL.

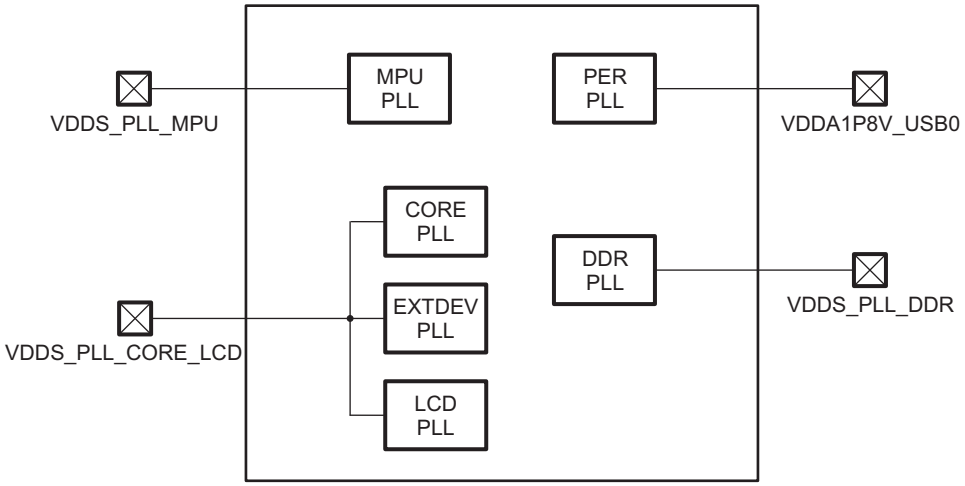

Figure 5-9. DPLL Power Supply Connectivity

Table 5-11. DPLL Power Supply Requirements

SUPPLY NAME	DESCRIPTION	MIN	NOM	MAX	UNIT
VDDA1P8V_USB0	Supply voltage range for USBPHY and PER DPLL, Analog, 1.8V	1.71	1.8	1.89	V
	Max. peak-to-peak supply noise			50	mV (p-p)
VDDS_PLL_MPU	Supply voltage range for DPLL MPU, Analog	1.71	1.8	1.89	V
	Max. peak-to-peak supply noise			50	mV (p-p)
VDDS_PLL_CORE_LCD	Supply voltage range for DPLL CORE, EXTDEV, and LCD, Analog	1.71	1.8	1.89	V
	Max. peak-to-peak supply noise			50	mV (p-p)
VDDS_PLL_DDR	Supply voltage range for DPLL DDR, Analog	1.71	1.8	1.89	V
	Max. peak-to-peak supply noise			50	mV (p-p)

5.12.2.2 Input Clock Specifications

The device has two clock inputs. Each clock input passes through an internal oscillator which can be connected to an external crystal circuit (oscillator mode) or external LVCMOS square-wave digital clock source (bypass mode). The oscillators automatically operate in bypass mode when their input is connected to an external LVCMOS square-wave digital clock source. The oscillator associated with a specific clock input must be enabled when the clock input is being used in either oscillator mode or bypass mode.

The OSC1 oscillator provides a 32.768-kHz reference clock to the real-time clock (RTC) and is connected to the RTC_XTALIN and RTC_XTALOUT terminals. This clock source is referred to as the 32K oscillator (CLK_32K_RTC) in the device-specific technical reference manual. OSC1 is disabled by default after power is applied. This clock input is optional and may not be required if the RTC is configured to receive a clock from the internal 32k RC oscillator (CLK_RC32K) or peripheral PLL (CLK_32KHZ) which receives a reference clock from the OSC0 input.

The OSC0 oscillator provides a 19.2-MHz, 24-MHz, 25-MHz, or 26-MHz reference clock which is used to clock all non-RTC functions and is connected to the XTALIN and XTALOUT terminals. This clock source is referred to as the master oscillator (CLK_M_OSC) in the device-specific technical reference manual. OSC0 is enabled by default after power is applied.

For more information related to recommended circuit topologies and crystal oscillator circuit requirements for these clock inputs, see Section 5.12.2.3.

Copyright © 2014–2019, Texas Instruments Incorporated

5.12.2.3 Input Clock Requirements

5.12.2.3.1 OSC0 Internal Oscillator Clock Source

Figure 5-10 shows the recommended crystal circuit. It is recommended that preproduction printed-circuit board (PCB) designs include the two optional resistors R_{bias} and R_d in case they are required for proper oscillator operation when combined with production crystal circuit components. In most cases, R_{bias} is not required and R_d is a 0-Ω resistor. These resistors may be removed from production PCB designs after evaluating oscillator performance with production crystal circuit components installed on preproduction PCBs.

The XTALIN terminal has a 15-kΩ to 40-kΩ internal pulldown resistor which is enabled when OSC0 is disabled. This internal resistor prevents the XTALIN terminal from floating to an invalid logic level which may increase leakage current through the oscillator input buffer.

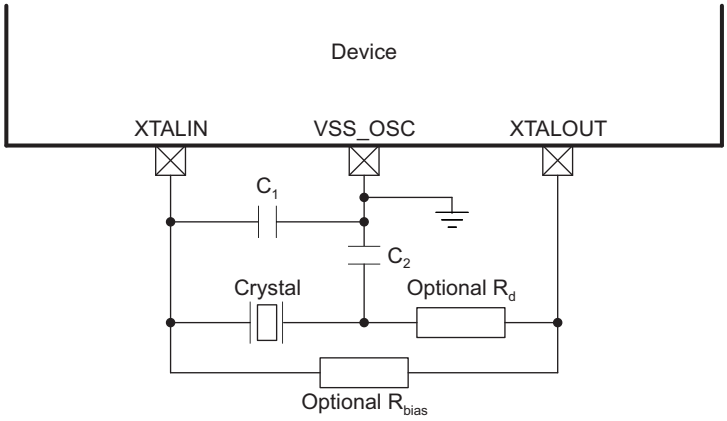

Copyright © 2016, Texas Instruments Incorporated

A. Oscillator components (Crystal, C_1, C_2, optional R_{bias} and R_d) must be located close to the package. Parasitic capacitance to the printed circuit board (PCB) ground and other signals should be minimized to reduce noise coupled into the oscillator. The external crystal component grounds should be connected to the VSS_OSC terminal. The VSS_OSC terminal should be connected to the PCB ground plane as close as possible to the device.

B. C_1 and C_2 represent the total capacitance of the respective PCB trace, load capacitor, and other components (excluding the crystal) connected to each crystal terminal. The value of capacitors C_1 and C_2 should be selected to provide the total load capacitance, C_L, specified by the crystal manufacturer. The total load capacitance is $C_L = [(C_1 \times C_2)/(C_1+C_2)] + C_{shunt}$, where C_{shunt} is the crystal shunt capacitance (C_0) specified by the crystal manufacturer plus any mutual capacitance ($C_{pkg} + C_{PCB}$) seen across the XTALIN and XTALOUT signals. For recommended values of crystal circuit components, see Table 5-12.

Figure 5-10. OSC0 Crystal Circuit Schematic

Table 5-12. OSC0 Crystal Circuit Requirements

NAME	DESCRIPTION		MIN	TYP	MAX	UNIT
f_{xtal}	Crystal parallel resonance frequency	Fundamental mode oscillation only		19.2, 24.0, 25.0, or 26.0		MHz
	Crystal frequency stability and tolerance		–50.0		50.0	ppm
C_{C1}	C_1 capacitance		12.0		24.0	pF
C_{C2}	C_2 capacitance		12.0		24.0	pF
C_{shunt}	Shunt capacitance				5.0	pF
ESR	Crystal effective series resistance	f_{xtal} = 19.2 MHz, oscillator has nominal negative resistance of 272 Ω and worst-case negative resistance of 163 Ω			54.4	Ω
		f_{xtal} = 24.0 MHz, oscillator has nominal negative resistance of 240 Ω and worst-case negative resistance of 144 Ω			48.0	
		f_{xtal} = 25.0 MHz, oscillator has nominal negative resistance of 233 Ω and worst-case negative resistance of 140 Ω			46.6	
		f_{xtal} = 26.0 MHz, oscillator has nominal negative resistance of 227 Ω and worst-case negative resistance of 137 Ω			45.3	

Table 5-13. OSC0 Crystal Circuit Characteristics

NAME	DESCRIPTION		MIN	TYP	MAX	UNIT
C_{pkg}	Shunt capacitance of package	ZDN package		0.01		pF
P_{xtal}	The actual values of the ESR, f_{xtal}, and C_L should be used to yield a typical crystal power dissipation value. Using the maximum values specified for ESR, f_{xtal}, and C_L parameters yields a maximum power dissipation value.			P_{xtal} = 0.5 ESR (2 π f_{xtal} C_L VDDS_OSC)^2		
t_{sX}	Start-up time			1.5		ms

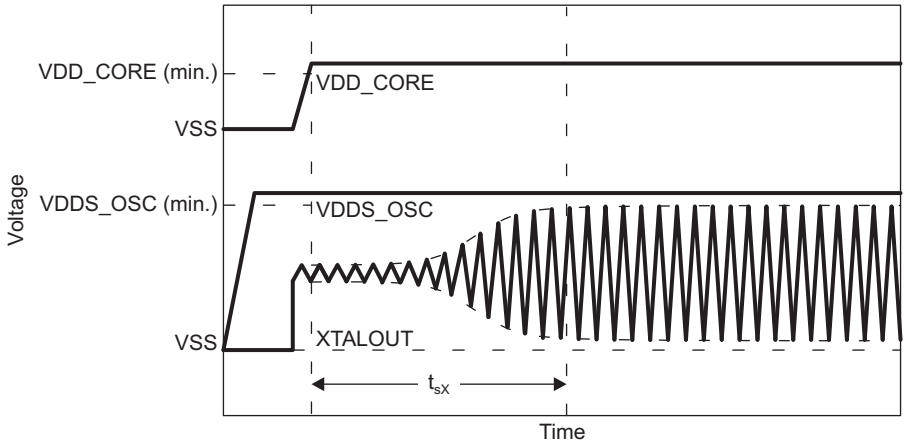

Figure 5-11. OSC0 Start-up Time

Copyright © 2014–2019, Texas Instruments Incorporated

5.12.2.3.2 OSC0 LVCMOS Digital Clock Source

Figure 5-12 shows the recommended oscillator connections when OSC0 is connected to an LVCMOS square-wave digital clock source. The LVCMOS clock source is connected to the XTALIN terminal. In this mode of operation, the XTALOUT terminal should not be used to source any external components. The printed circuit board design should provide a mechanism to disconnect the XTALOUT terminal from any external components or signal traces that may couple noise into OSC0 via the XTALOUT terminal.

The XTALIN terminal has a 15-kΩ to 40-kΩ internal pulldown resistor which is enabled when OSC0 is disabled. This internal resistor prevents the XTALIN terminal from floating to an invalid logic level which may increase leakage current through the oscillator input buffer.

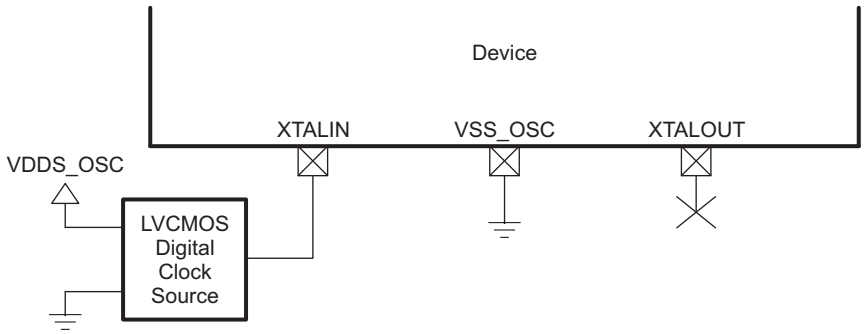

Copyright © 2016, Texas Instruments Incorporated

Figure 5-12. OSC0 LVCMOS Circuit Schematic

Table 5-14. OSC0 LVCMOS Reference Clock Requirements

NAME	DESCRIPTION	MIN	TYP	MAX	UNIT
$f_{(XTALIN)}$	Frequency, LVCMOS reference clock		19.2, 24, 25, or 26		MHz
	Frequency, LVCMOS reference clock stability and tolerance (1)	–50		50	ppm
$t_{dc(XTALIN)}$	Duty cycle, LVCMOS reference clock period	45%		55%	
$t_{jpp(XTALIN)}$	Jitter peak-to-peak, LVCMOS reference clock period	–1%		1%	
$t_{R(XTALIN)}$	Time, LVCMOS reference clock rise			5	ns
$t_{F(XTALIN)}$	Time, LVCMOS reference clock fall			5	ns

(1) Initial accuracy, temperature drift, and aging effects should be combined when evaluating a reference clock for this requirement.

5.12.2.3.3 OSC1 Internal Oscillator Clock Source

Figure 5-13 shows the recommended crystal circuit for OSC1 of the package. It is recommended that pre-production printed circuit board (PCB) designs include the two optional resistors R_{bias} and R_d in case they are required for proper oscillator operation when combined with production crystal circuit components. In most cases, R_{bias} is not required and R_d is a 0-Ω resistor. These resistors may be removed from production PCB designs after evaluating oscillator performance with production crystal circuit components installed on preproduction PCBs.

The RTC_XTALIN terminal has a 10-kΩ to 40-kΩ internal pullup resistor which is enabled when OSC1 is disabled. This internal resistor prevents the RTC_XTALIN terminal from floating to an invalid logic level which may increase leakage current through the oscillator input buffer.

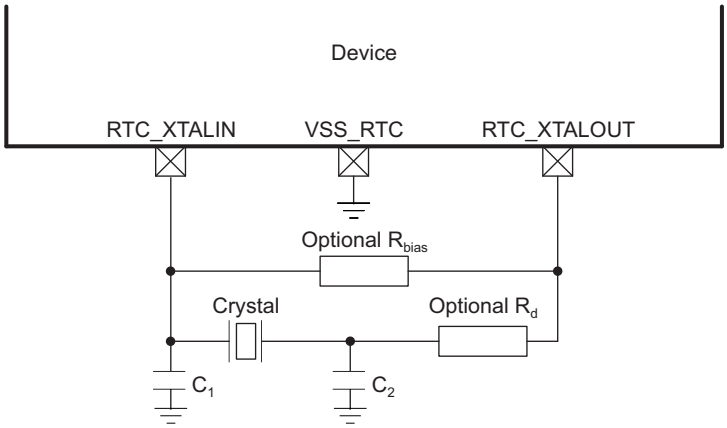

Copyright © 2016, Texas Instruments Incorporated

A. Oscillator components (Crystal, C_1, C_2, optional R_{bias} and R_d) must be located close to the package. Parasitic capacitance to the printed circuit board (PCB) ground and other signals should be minimized to reduce noise coupled into the oscillator.

B. C_1 and C_2 represent the total capacitance of the respective PCB trace, load capacitor, and other components (excluding the crystal) connected to each crystal terminal. The value of capacitors C_1 and C_2 should be selected to provide the total load capacitance, C_L, specified by the crystal manufacturer. The total load capacitance is $C_L = [(C_1 \times C_2)/(C_1+C_2)] + C_{shunt}$, where C_{shunt} is the crystal shunt capacitance (C_0) specified by the crystal manufacturer plus any mutual capacitance (C_{pkg} + C_{PCB}) seen across the RTC_XTALIN and RTC_XTALOUT signals. For recommended values of crystal circuit components, see Table 5-15.

Figure 5-13. OSC1 Crystal Circuit Schematic

Table 5-15. OSC1 Crystal Circuit Requirements

NAME	DESCRIPTION		MIN	TYP	MAX	UNIT
f_{xtal}	Crystal parallel resonance frequency	Fundamental mode oscillation only		32.768		kHz
	Crystal frequency stability and tolerance	Maximum RTC error = 10.512 minutes per year	–20.0		20.0	ppm
		Maximum RTC error = 26.28 minutes per year	–50.0		50.0	ppm
C_{C1}	C_1 capacitance		12.0		24.0	pF
C_{C2}	C_2 capacitance		12.0		24.0	pF
C_{shunt}	Shunt capacitance				1.5	pF
ESR	Crystal effective series resistance	f_{xtal} = 32.768 kHz, oscillator has nominal negative resistance of 725 kΩ and worst-case negative resistance of 250 kΩ			80	kΩ

Table 5-16. OSC1 Crystal Circuit Characteristics

NAME	DESCRIPTION		MIN	TYP	MAX	UNIT
C_{pkg}	Shunt capacitance of package	ZDN package		0.17		pF

Copyright © 2014–2019, Texas Instruments Incorporated

Table 5-16. OSC1 Crystal Circuit Characteristics (continued)

NAME	DESCRIPTION	MIN	TYP	MAX	UNIT
P_{xtal}	The actual values of the ESR, f_{xtal}, and C_L should be used to yield a typical crystal power dissipation value. Using the maximum values specified for ESR, f_{xtal}, and C_L parameters yields a maximum power dissipation value.		$P_{xtal} = 0.5\ ESR\ (2\ \pi\ f_{xtal}\ C_L\ VDDS_RTC)^2$		
t_{sX}	Start-up time		2		s

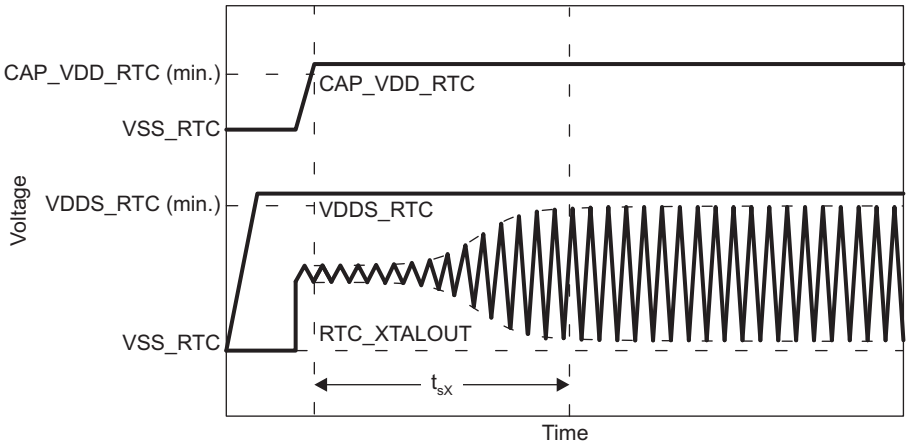

Figure 5-14. OSC1 Start-up Time

5.12.2.3.4 OSC1 LVCMOS Digital Clock Source

Figure 5-15 shows the recommended oscillator connections when OSC1 of the package is connected to an LVCMOS square-wave digital clock source. The LVCMOS clock source is connected to the RTC_XTALIN terminal. In this mode of operation, the RTC_XTALOUT terminal should not be used to source any external components. The printed circuit board design should provide a mechanism to disconnect the RTC_XTALOUT terminal from any external components or signal traces that may couple noise into OSC1 via the RTC_XTALOUT terminal.

The RTC_XTALIN terminal has a 10-kΩ to 40-kΩ internal pullup resistor which is enabled when OSC1 is disabled. This internal resistor prevents the RTC_XTALIN terminal from floating to an invalid logic level which may increase leakage current through the oscillator input buffer.

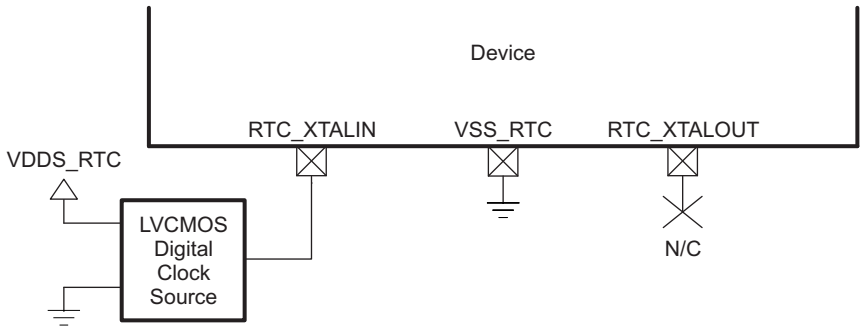

Copyright © 2016, Texas Instruments Incorporated

Figure 5-15. OSC1 LVCMOS Circuit Schematic

Table 5-17. OSC1 LVCMOS Reference Clock Requirements

NAME	DESCRIPTION		MIN	TYP	MAX	UNIT
$f_{(RTC_XTALIN)}$	Frequency, LVCMOS reference clock			32.768		kHz
	Frequency, LVCMOS reference clock stability and tolerance (1)	Maximum RTC error = 10.512 minutes/year	–20		20	ppm
		Maximum RTC error = 26.28 minutes/year	–50		50	ppm
$t_{dc(RTC_XTALIN)}$	Duty cycle, LVCMOS reference clock period		45%		55%	
$t_{jpp(RTC_XTALIN)}$	Jitter peak-to-peak, LVCMOS reference clock period		–1%		1%	
$t_{R(RTC_XTALIN)}$	Time, LVCMOS reference clock rise				5	ns
$t_{F(RTC_XTALIN)}$	Time, LVCMOS reference clock fall				5	ns

(1) Initial accuracy, temperature drift, and aging effects should be combined when evaluating a reference clock for this requirement.

5.12.2.3.5 OSC1 Not Used

Figure 5-16 shows the recommended oscillator connections when OSC1 is not used. An internal 10-kΩ pullup on the RTC_XTALIN terminal is turned on when OSC1 is disabled to prevent this input from floating to an invalid logic level which may increase leakage current through the oscillator input buffer. OSC1 is disabled by default after power is applied. Therefore, both RTC_XTALIN and RTC_XTALOUT terminals should be a no connect (NC) when OSC1 is not used.

For more information on disabling OSC1, see the device-specific technical reference manual.

Copyright © 2014–2019, Texas Instruments Incorporated

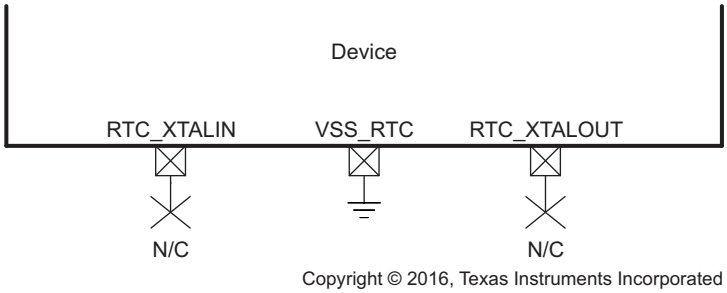

Figure 5-16. OSC1 Not Used Schematic

5.12.2.4 Output Clock Specifications

The device has two clock output signals. The CLKOUT1 signal can be configured to output the master oscillator (CLK_M_OSC), EXTDEV_PLL, 32-kHz, or several other internal clocks. See the device-specific TRM for more details. The CLKOUT2 signal can be configured to output the OSC1 input clock, which is referred to as the 32K oscillator (CLK_32K_RTC) in the device-specific technical reference manual, or four other internal clocks. For more information related to configuring these clock output signals, see the *CLKOUT Signals* section of the device-specific technical reference manual.

5.12.2.5 Output Clock Characteristics

5.12.2.5.1 CLKOUT1

The CLKOUT1 signal can be output on the XDMA_EVENT_INTR0 terminal. This terminal connects to one of seven internal signals through configurable multiplexers. The XDMA_EVENT_INTR0 multiplexer must be configured for Mode 3 to connect the CLKOUT1 signal to the XDMA_EVENT_INTR0 terminal.

The default reset configuration of the XDMA_EVENT_INTR0 multiplexer is selected by the logic level applied to the DSS_HSYNC terminal on the rising edge of PWRONRSTn. The XDMA_EVENT_INTR0 multiplexer is configured to Mode 7 if the DSS_HSYNC terminal is low on the rising edge of PWRONRSTn or Mode 3 if the DSS_HSYNC terminal is high on the rising edge of PWRONRSTn. This allows the CLKOUT1 signal to be output on the XDMA_EVENT_INTR0 terminal without software intervention. In this mode, the output is held low while PWRONRSTn is active and begins to toggle after PWRONRSTn is released.

5.12.2.5.2 CLKOUT2

The CLKOUT2 signal can be output on the XDMA_EVENT_INTR1 terminal. This terminal connects to one of seven internal signals through configurable multiplexers. The XDMA_EVENT_INTR1 multiplexer must be configured for Mode 3 to connect the CLKOUT2 signal to the XDMA_EVENT_INTR1 terminal.

The default reset configuration of the XDMA_EVENT_INTR1 multiplexer is always Mode 7. Software must configure the XDMA_EVENT_INTR1 multiplexer to Mode 3 for the CLKOUT2 signal to be output on the XDMA_EVENT_INTR1 terminal.

5.12.3 Timing Parameters and Board Routing Analysis

The timing parameter values specified in this data manual do *not* include delays by board routings. As a good board design practice, such delays must *always* be taken into account. Timing values may be adjusted by increasing or decreasing such delays. TI recommends using the available IO buffer information specification (IBIS) models to analyze the timing characteristics correctly. If needed, external logic hardware such as buffers may be used to compensate any timing differences.

The timing parameter values specified in this data manual assume the SLEWCTRL bit in each pad control register is configured for fast mode (0b).

For the LPDDR2, DDR3, and DDR3L memory interfaces, it is *not* necessary to use the IBIS models to analyze timing characteristics. TI provides a PCB routing rules solution that describes the routing rules to ensure the memory interface timings are met.

5.12.4 Recommended Clock and Control Signal Transition Behavior

All clocks and control signals must transition between V_{IH} and V_{IL} (or between V_{IL} and V_{IH}) in a monotonic manner.

Copyright © 2014–2019, Texas Instruments Incorporated

5.12.5 Controller Area Network (CAN)

For more information, see the Controller Area Network (CAN) section of the *AM437x Sitara Processors Technical Reference Manual*.

5.12.5.1 DCAN Electrical Data and Timing

Table 5-18. Timing Requirements for DCANx Receive

(see Figure 5-17)

NO.			OPP100		OPP50		UNIT
			MIN	MAX	MIN	MAX	
	$f_{baud(baud)}$	Maximum programmable baud rate		1		1	Mbps
1	$t_{w(RX)}$	Pulse duration, receive data bit	H - 2(1)	H + 2(1)	H + 2(1)	H + 2(1)	ns

(1) H = period of baud rate, 1/programmed baud rate.

Table 5-19. Switching Characteristics for DCANx Transmit

(see Figure 5-17)

NO.	PARAMETER		OPP100		OPP50		UNIT
			MIN	MAX	MIN	MAX	
	$f_{baud(baud)}$	Maximum programmable baud rate		1		1	Mbps
2	$t_{w(TX)}$	Pulse duration, transmit data bit	H - 2(1)	H + 2(1)	H - 2(1)	H + 2(1)	ns

(1) H = period of baud rate, 1/programmed baud rate.

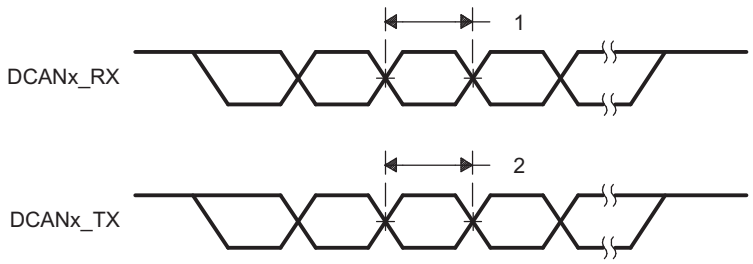

Figure 5-17. DCANx Timings

5.12.6 DMTimer

5.12.6.1 DMTimer Electrical Data and Timing

Table 5-20. Timing Requirements for DMTimer [1-11]

(see Figure 5-18)

NO.			MIN	MAX	UNIT
1	$t_{c(TCLKIN)}$	Cycle time, TCLKIN	4P+1 (1)		ns

(1) P = period of PICLKOCP (interface clock).

Table 5-21. Switching Characteristics for DMTimer [4-7]

(see Figure 5-18)

NO.	PARAMETER		MIN	MAX	UNIT
2	$t_{w(TIMERxH)}$	Pulse duration, high	4P-3 (1)		ns
3	$t_{w(TIMERxL)}$	Pulse duration, low	4P-3 (1)		ns

(1) P = period of PICLKTIMER (functional clock).

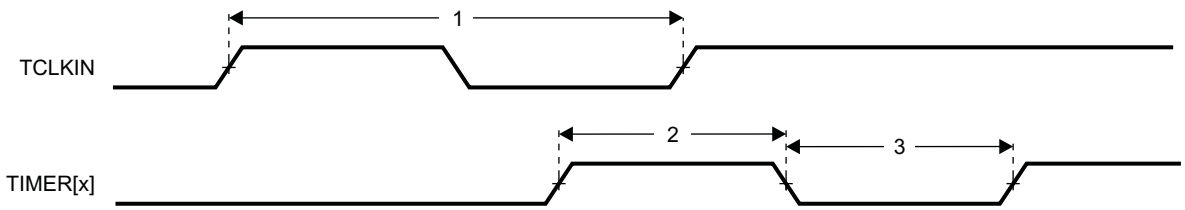

Figure 5-18. Timer Timing

Copyright © 2014–2019, Texas Instruments Incorporated

5.12.7 Ethernet Media Access Controller (EMAC) and Switch

5.12.7.1 Ethernet MAC and Switch Electrical Data and Timing

The Ethernet MAC and Switch implemented in the device supports GMII mode, but the design does not pin out 9 of the 24 GMII signals. This was done to reduce the total number of package terminals. Therefore, the device does not support GMII mode. MII mode is supported with the remaining GMII signals.

The *AM437x Sitara Processors Technical Reference Manual* and this document may reference internal signal names when discussing peripheral input and output signals because many of the package terminals can be multiplexed to one of several peripheral signals. For example, the terminal names for port 1 of the Ethernet MAC and switch have been changed from GMII to MII to indicate their Mode 0 function, but the internal signal is named GMII. However, documents that describe the Ethernet switch reference these signals by their internal signal name. For a cross-reference of internal signal names to terminal names, see Table 4-10.

Operation of the Ethernet MAC and switch in RGMII mode is not supported for OPP50.

Table 5-22. Ethernet MAC and Switch Timing Conditions

TIMING CONDITION PARAMETER		MIN	TYP	MAX	UNIT
Input Conditions					
t_R	Input signal rise time	1(1)		5(1)	ns
t_F	Input signal fall time	1(1)		5(1)	ns
Output Condition					
C_{LOAD}	Output load capacitance	3		30	pF

(1) Except when specified otherwise.

5.12.7.1.1 Ethernet MAC/Switch MDIO Electrical Data and Timing

Table 5-23. Timing Requirements for MDIO_DATA

(see Figure 5-19)

NO.			MIN	TYP	MAX	UNIT
1	$t_{su(MDIO-MDC)}$	Setup time, MDIO valid before MDC high	90			ns
2	$t_{h(MDIO-MDC)}$	Hold time, MDIO valid from MDC high	0			ns

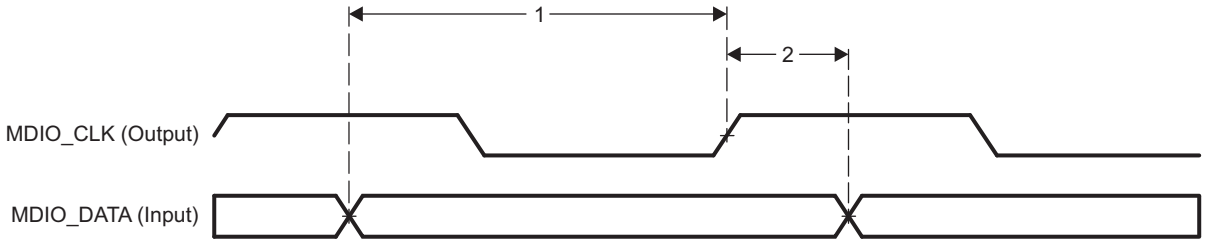

Figure 5-19. MDIO_DATA Timing - Input Mode

Table 5-24. Switching Characteristics for MDIO_CLK

(see Figure 5-20)

NO.	PARAMETER		MIN	TYP	MAX	UNIT
1	$t_{c(MDC)}$	Cycle time, MDC	400			ns
2	$t_{w(MDCH)}$	Pulse duration, MDC high	160			ns
3	$t_{w(MDCL)}$	Pulse duration, MDC low	160			ns
4	$t_{t(MDC)}$	Transition time, MDC			5	ns

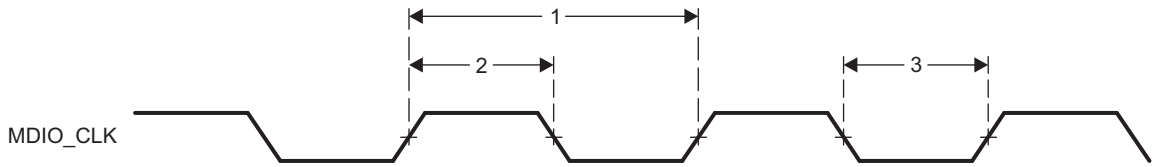

Figure 5-20. MDIO_CLK Timing

Table 5-25. MDIO Switching Characteristics - MDIO_DATA

(see Figure 5-21)

NO.			MIN	TYP	MAX	UNIT
1	$t_{d(MDC-MDIO)}$	Delay time, MDC high to MDIO valid	10		(P*0.5)–10 (1)	ns

(1) P = MDIO_CLK period

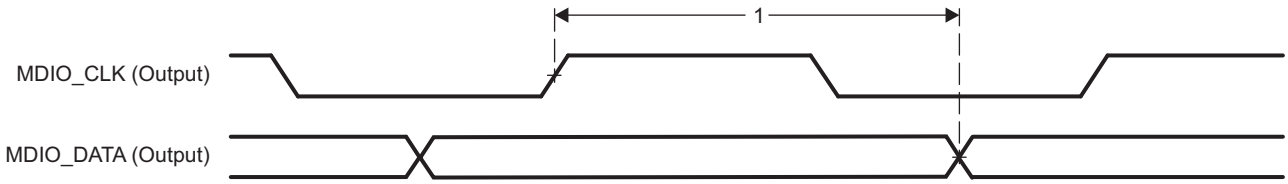

Figure 5-21. MDIO_DATA Timing - Output Mode

5.12.7.1.2 Ethernet MAC and Switch MII Electrical Data and Timing

Table 5-26. Timing Requirements for GMII[x]_RXCLK - MII Mode

(see Figure 5-22)

NO.			10 Mbps			100 Mbps			UNIT
			MIN	TYP	MAX	MIN	TYP	MAX	
1	$t_{c(RX_CLK)}$	Cycle time, RX_CLK	399.96		400.04	39.996		40.004	ns
2	$t_{w(RX_CLKH)}$	Pulse Duration, RX_CLK high	140		260	14		26	ns
3	$t_{w(RX_CLKL)}$	Pulse Duration, RX_CLK low	140		260	14		26	ns
4	$t_{t(RX_CLK)}$	Transition time, RX_CLK			5			5	ns

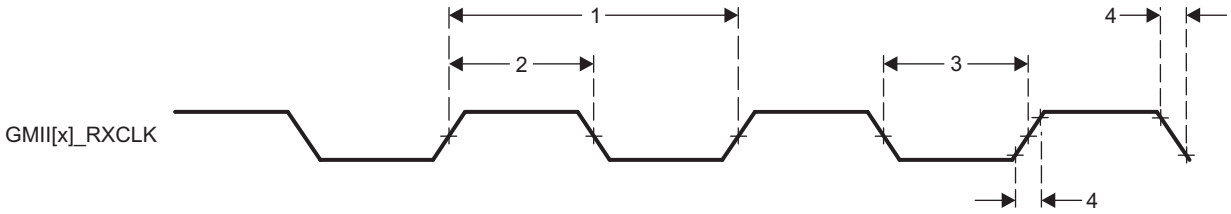

Figure 5-22. GMII[x]_RXCLK Timing - MII Mode

Copyright © 2014–2019, Texas Instruments Incorporated

Table 5-27. Timing Requirements for GMII[x]_TXCLK - MII Mode

(see Figure 5-23)

NO.			10 Mbps			100 Mbps			UNIT
			MIN	TYP	MAX	MIN	TYP	MAX	
1	$t_{c(TX_CLK)}$	Cycle time, TX_CLK	399.96		400.04	39.996		40.004	ns
2	$t_{w(TX_CLKH)}$	Pulse Duration, TX_CLK high	140		260	14		26	ns
3	$t_{w(TX_CLKL)}$	Pulse Duration, TX_CLK low	140		260	14		26	ns
4	$t_{t(TX_CLK)}$	Transition time, TX_CLK			5			5	ns

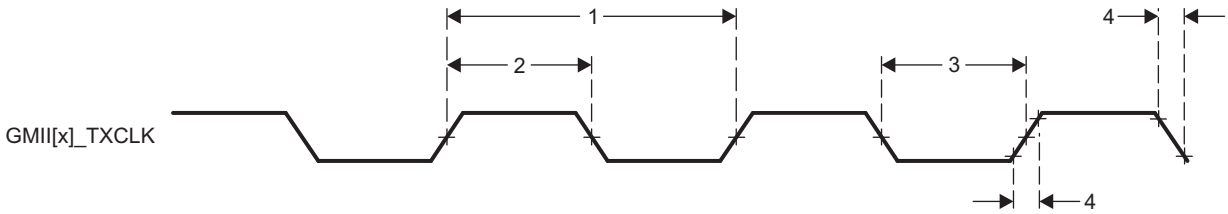

Figure 5-23. GMII[x]_TXCLK Timing - MII Mode

Table 5-28. Timing Requirements for GMII[x]_RXD[3:0], GMII[x]_RXDV, and GMII[x]_RXER - MII Mode

(see Figure 5-24)

NO.			10 Mbps			100 Mbps			UNIT
			MIN	TYP	MAX	MIN	TYP	MAX	
1	$t_{su(RXD\text{-}RX_CLK)}$	Setup time, RXD[3:0] valid before RX_CLK	8			8			ns
	$t_{su(RX_DV\text{-}RX_CLK)}$	Setup time, RX_DV valid before RX_CLK							
	$t_{su(RX_ER\text{-}RX_CLK)}$	Setup time, RX_ER valid before RX_CLK							
2	$t_{h(RX_CLK\text{-}RXD)}$	Hold time RXD[3:0] valid after RX_CLK	8			8			ns
	$t_{h(RX_CLK\text{-}RX_DV)}$	Hold time RX_DV valid after RX_CLK							
	$t_{h(RX_CLK\text{-}RX_ER)}$	Hold time RX_ER valid after RX_CLK							

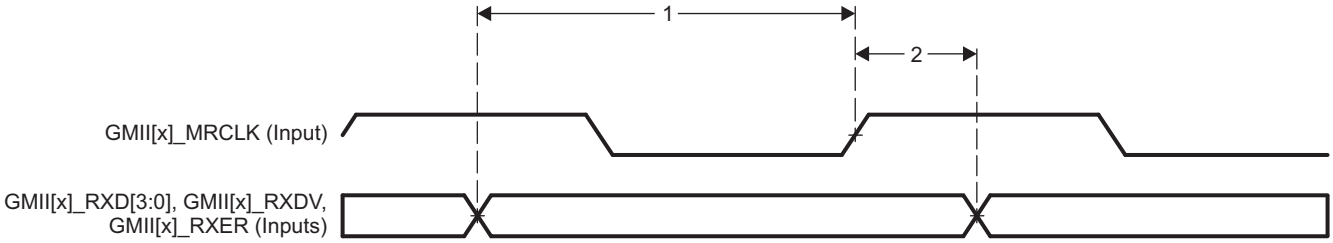

Figure 5-24. GMII[x]_RXD[3:0], GMII[x]_RXDV, GMII[x]_RXER Timing - MII Mode

Table 5-29. Switching Characteristics for GMII[x]_TXD[3:0], and GMII[x]_TXEN - MII Mode

(see Figure 5-25)

NO.	PARAMETER		10 Mbps			100 Mbps			UNIT
			MIN	TYP	MAX	MIN	TYP	MAX	
1	$t_{d(TX_CLK-TXD)}$	Delay time, TX_CLK high to TXD[3:0] valid	5		25	5		25	ns
	$t_{d(TX_CLK-TX_EN)}$	Delay time, TX_CLK to TX_EN valid							

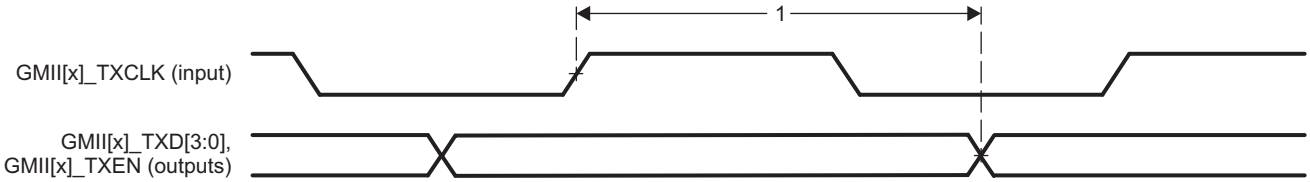

Figure 5-25. GMII[x]_TXD[3:0], GMII[x]_TXEN Timing - MII Mode

Copyright © 2014–2019, Texas Instruments Incorporated

5.12.7.1.3 Ethernet MAC and Switch RMII Electrical Data and Timing

Table 5-30. Timing Requirements for RMII[x]_REFCLK - RMII Mode

(see Figure 5-26)

NO.			MIN	TYP	MAX	UNIT
1	$t_{c(REF_CLK)}$	Cycle time, REF_CLK	19.999		20.001	ns
2	$t_{w(REF_CLKH)}$	Pulse Duration, REF_CLK high	7		13	ns
3	$t_{w(REF_CLKL)}$	Pulse Duration, REF_CLK low	7		13	ns

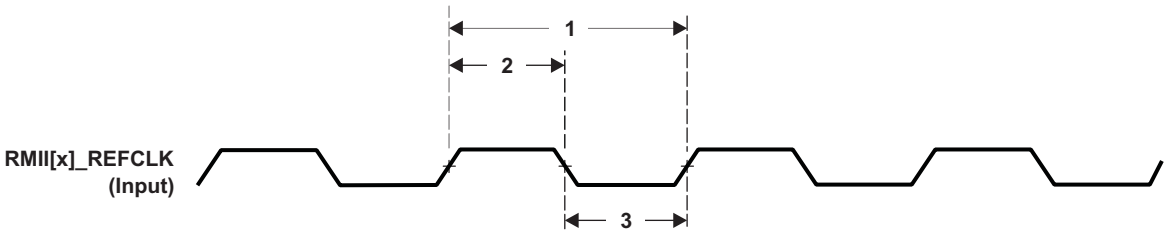

Figure 5-26. RMII[x]_REFCLK Timing - RMII Mode

Table 5-31. Timing Requirements for RMII[x]_RXD[1:0], RMII[x]_CRS_DV, and RMII[x]_RXER - RMII Mode

(see Figure 5-27)

NO.			MIN	TYP	MAX	UNIT
1	$t_{su(RXD\text{-}REF_CLK)}$	Setup time, RXD[1:0] valid before REF_CLK	4			ns
	$t_{su(CRS_DV\text{-}REF_CLK)}$	Setup time, CRS_DV valid before REF_CLK				
	$t_{su(RX_ER\text{-}REF_CLK)}$	Setup time, RX_ER valid before REF_CLK				
2	$t_{h(REF_CLK\text{-}RXD)}$	Hold time RXD[1:0] valid after REF_CLK	2			ns
	$t_{h(REF_CLK\text{-}CRS_DV)}$	Hold time, CRS_DV valid after REF_CLK				
	$t_{h(REF_CLK\text{-}RX_ER)}$	Hold time, RX_ER valid after REF_CLK				

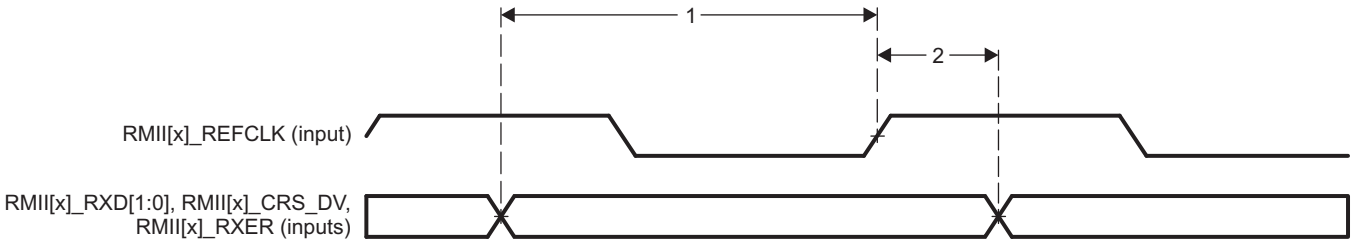

Figure 5-27. RMII[x]_RXD[1:0], RMII[x]_CRS_DV, RMII[x]_RXER Timing - RMII Mode

Table 5-32. Switching Characteristics for RMII[x]_TXD[1:0], and RMII[x]_TXEN - RMII Mode

(see Figure 5-28)

NO.	PARAMETER		MIN	TYP	MAX	UNIT
1	$t_{d(REF_CLK-TXD)}$	Delay time, REF_CLK high to TXD[1:0] valid	2		14.2	ns
	$t_{d(REF_CLK-TXEN)}$	Delay time, REF_CLK to TXEN valid				

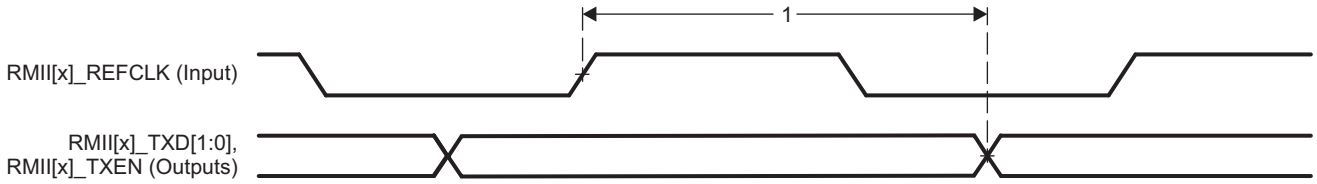

Figure 5-28. RMII[x]_TXD[1:0], RMII[x]_TXEN Timing - RMII Mode

Copyright © 2014–2019, Texas Instruments Incorporated

5.12.7.1.4 Ethernet MAC and Switch RGMII Electrical Data and Timing

Table 5-33. Timing Requirements for RGMII[x]_RCLK - RGMII Mode

(see Figure 5-29)

NO.			10 Mbps			100 Mbps			1000 Mbps			UNIT
			MIN	TYP	MAX	MIN	TYP	MAX	MIN	TYP	MAX	
1	$t_{c(RXC)}$	Cycle time, RXC	360		440	36		44	7.2		8.8	ns
2	$t_{w(RXCH)}$	Pulse duration, RXC high	160		240	16		24	3.6		4.4	ns
3	$t_{w(RXCL)}$	Pulse duration, RXC low	160		240	16		24	3.6		4.4	ns
4	$t_{t(RXC)}$	Transition time, RXC			0.75			0.75			0.75	ns

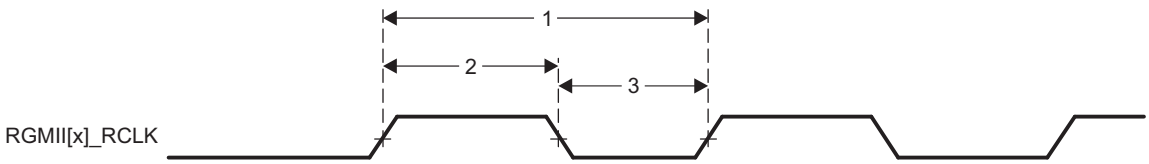

Figure 5-29. RGMII[x]_RCLK Timing - RGMII Mode

Table 5-34. Timing Requirements for RGMII[x]_RD[3:0], and RGMII[x]_RCTL - RGMII Mode

(see Figure 5-30)

NO.			10 Mbps			100 Mbps			1000 Mbps			UNIT
			MIN	TYP	MAX	MIN	TYP	MAX	MIN	TYP	MAX	
1	$t_{su(RD-RXC)}$	Setup time, RD[3:0] valid before RXC high or low	1			1			1			ns
	$t_{su(RX_CTL-RXC)}$	Setup time, RX_CTL valid before RXC high or low	1			1			1			
2	$t_{h(RXC-RD)}$	Hold time, RD[3:0] valid after RXC high or low	1			1			1			ns
	$t_{h(RXC-RX_CTL)}$	Hold time, RX_CTL valid after RXC high or low	1			1			1			
3	$t_{t(RD)}$	Transition time, RD			0.75			0.75			0.75	ns
	$t_{t(RX_CTL)}$	Transition time, RX_CTL			0.75			0.75			0.75	

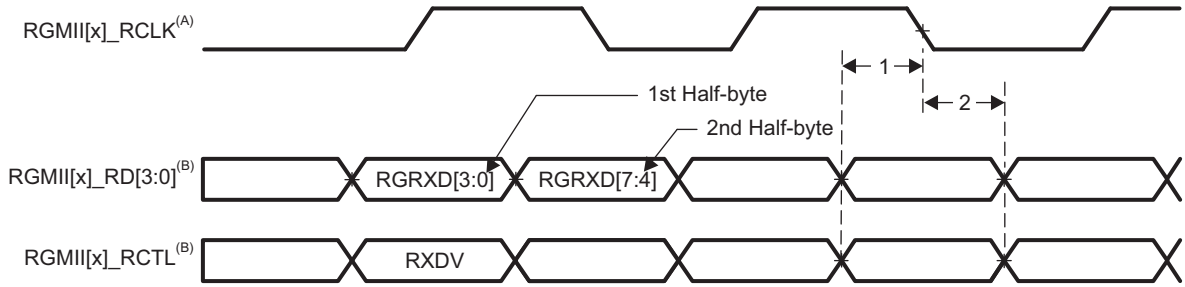

A. RGMII[x]_RCLK must be externally delayed relative to the RGMII[x]_RD[3:0] and RGMII[x]_RCTL signals to meet the respective timing requirements.

B. Data and control information is received using both edges of the clocks. RGMII[x]_RD[3:0] carries data bits 3-0 on the rising edge of RGMII[x]_RCLK and data bits 7-4 on the falling edge of RGMII[x]_RCLK. Similarly, RGMII[x]_RCTL carries RXDV on rising edge of RGMII[x]_RCLK and RXERR on falling edge of RGMII[x]_RCLK.

Figure 5-30. RGMII[x]_RD[3:0], RGMII[x]_RCTL Timing - RGMII Mode

Table 5-35. Switching Characteristics for RGMII[x]_TCLK - RGMII Mode

(see Figure 5-31)

NO.	PARAMETER		10 Mbps			100 Mbps			1000 Mbps			UNIT
			MIN	TYP	MAX	MIN	TYP	MAX	MIN	TYP	MAX	
1	$t_{c(TXC)}$	Cycle time, TXC	360		440	36		44	7.2		8.8	ns
2	$t_{w(TXCH)}$	Pulse duration, TXC high	160		240	16		24	3.6		4.4	ns
3	$t_{w(TXCL)}$	Pulse duration, TXC low	160		240	16		24	3.6		4.4	ns

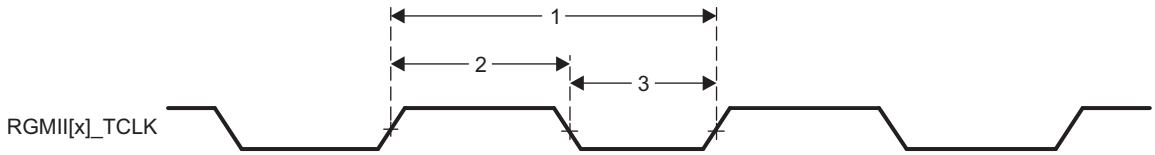

Figure 5-31. RGMII[x]_TCLK Timing - RGMII Mode

Table 5-36. Switching Characteristics for RGMII[x]_TD[3:0], and RGMII[x]_TCTL - RGMII Mode

(see Figure 5-32)

NO.	PARAMETER		10 Mbps			100 Mbps			1000 Mbps			UNIT
			MIN	TYP	MAX	MIN	TYP	MAX	MIN	TYP	MAX	
1	$t_{sk(TD-TXC)}$	TD to TXC output skew	-0.5		0.5	-0.5		0.5	-0.5		0.5	ns
	$t_{sk(TX_CTL-TXC)}$	TX_CTL to TXC output skew	-0.5		0.5	-0.5		0.5	-0.5		0.5	

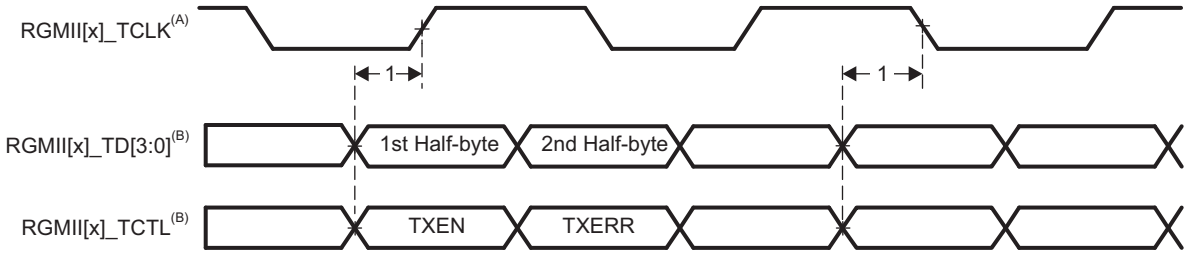

A. The Ethernet MAC and switch implemented in the device supports internal TX delay mode.

B. Data and control information is transmitted using both edges of the clocks. RGMII[x]_TD[3:0] carries data bits 3-0 on the rising edge of RGMII[x]_TCLK and data bits 7-4 on the falling edge of RGMII[x]_TCLK. Similarly, RGMII[x]_TCTL carries TXEN on rising edge of RGMII[x]_TCLK and TXERR of falling edge of RGMII[x]_TCLK.

Figure 5-32. RGMII[x]_TD[3:0], RGMII[x]_TCTL Timing - RGMII Mode

Copyright © 2014–2019, Texas Instruments Incorporated

5.12.8 External Memory Interfaces

The device includes the following external memory interfaces:

- General-purpose memory controller (GPMC)
- LPDDR2, DDR3, and DDR3L Memory Interface (EMIF)

5.12.8.1 General-Purpose Memory Controller (GPMC)

NOTE

For more information, see the Memory Subsystem and General-Purpose Memory Controller section of the *AM437x Sitara Processors Technical Reference Manual*.

The GPMC is the unified memory controller used to interface external memory devices such as:

- Asynchronous SRAM-like memories and ASIC devices
- Asynchronous page mode and synchronous burst NOR flash
- NAND flash

5.12.8.1.1 GPMC and NOR Flash—Synchronous Mode

Table 5-38 and Table 5-39 assume testing over the recommended operating conditions and electrical characteristic conditions below (see Figure 5-33 through Figure 5-37).

Table 5-37. GPMC and NOR Flash Timing Conditions—Synchronous Mode

TIMING CONDITION PARAMETER		MIN	TYP	MAX	UNIT
Input Conditions					
t_R	Input signal rise time	0.3		1.8	ns
t_F	Input signal fall time	0.3		1.8	ns
Output Condition					
C_{LOAD}	Output load capacitance	3		30	pF

Table 5-38. GPMC and NOR Flash Timing Requirements—Synchronous Mode

NO.			OPP100		OPP50		UNIT
			MIN	MAX	MIN	MAX	
F12	$t_{su(dV-clkH)}$	Setup time, input data gpmc_ad[15:0] valid before output clock gpmc_clk high	3.5		13.2		ns
F13	$t_{h(clkH-dV)}$	Hold time, input data gpmc_ad[15:0] valid after output clock gpmc_clk high	2.5		2.75		ns
F21	$t_{su(waitV-clkH)}$	Setup time, input wait gpmc_wait[x][(1)] valid before output clock gpmc_clk high	3.5		13.2		ns
F22	$t_{h(clkH-waitV)}$	Hold time, input wait gpmc_wait[x][(1)] valid after output clock gpmc_clk high	2.5		2.5		ns

(1) In gpmc_wait[x], x is equal to 0 or 1.

Table 5-39. GPMC and NOR Flash Switching Characteristics—Synchronous Mode

NO.	PARAMETER			OPP100		OPP50		UNIT
				MIN	MAX	MIN	MAX	
F0	$1 / t_{c(clk)}$	Frequency[1], output clock gpmc_clk			100		50	MHz
F1	$t_{w(clkH)}$	Typical pulse duration, output clock gpmc_clk high		0.5P[2]	0.5P[2]	0.5P[2]	0.5P[2]	ns
F1	$t_{w(clkL)}$	Typical pulse duration, output clock gpmc_clk low		0.5P[2]	0.5P[2]	0.5P[2]	0.5P[2]	ns
	$t_{dc(clk)}$	Duty cycle error, output clock gpmc_clk		–500	500	–500	500	ps
	$t_{J(clk)}$	Jitter standard deviation[3], output clock gpmc_clk			33.33		33.33	ps
F2	$t_{d(clkH-csnV)}$	Delay time, output clock gpmc_clk rising edge to output chip select gpmc_csn[x][4] transition		F[5] – 2.2	F[5] + 4.5	F[5] – 3.2	F[5] + 9.5	ns
F3	$t_{d(clkH-csnIV)}$	Delay time, output clock gpmc_clk rising edge to output chip select gpmc_csn[x][4] invalid		E[6] – 2.2	E[6] + 4.5	E[6] – 3.2	E[6] + 9.5	ns
F4	$t_{d(aV-clk)}$	Delay time, output address gpmc_a[27:1] valid to output clock gpmc_clk first edge		B[7] – 4.5	B[7] + 3.1	B[7] – 5.5	B[7] + 13.1	ns
F5	$t_{d(clkH-aIV)}$	Delay time, output clock gpmc_clk rising edge to output address gpmc_a[27:1] invalid		-2.3	4.5	-3.3	15.3	ns
F6	$t_{d(be[x]nV-clk)}$	Delay time, output lower byte enable and command latch enable gpmc_be0n_cle, output upper byte enable gpmc_be1n valid to output clock gpmc_clk first edge		B[7] - 1.9	B[7] + 2.3	B[7] – 2.9	B[7] + 12.3	ns
F7	$t_{d(clkH-be[x]nIV)}$	Delay time, output clock gpmc_clk rising edge to output lower byte enable and command latch enable gpmc_be0n_cle, output upper byte enable gpmc_be1n invalid[8]		D[9] – 2.3	D[9] + 1.9	D[9] – 3.3	D[9] + 6.9	ns
F7	$t_{d(clkL-be[x]nIV)}$	Delay time, gpmc_clk falling edge to gpmc_nbe0_cle, gpmc_nbe1 invalid[10]		D[9] – 2.3	D[9] + 1.9	D[9] – 3.3	D[9] + 6.9	ns
F7	$t_{d(clkL-be[x]nIV)}$	Delay time, gpmc_clk falling edge to gpmc_nbe0_cle, gpmc_nbe1 invalid[11]		D[9] – 2.3	D[9] + 1.9	D[9] – 3.3	D[9] + 11.9	ns
F8	$t_{d(clkH-advn)}$	Delay time, output clock gpmc_clk rising edge to output address valid and address latch enable gpmc_advn_ale transition		G[12] – 2.3	G[12] + 4.5	G[12] – 3.3	G[12] + 9.5	ns
F9	$t_{d(clkH-advnIV)}$	Delay time, output clock gpmc_clk rising edge to output address valid and address latch enable gpmc_advn_ale invalid		D[9] – 2.3	D[9] + 4.5	D[9] – 3.3	D[9] + 9.5	ns
F10	$t_{d(clkH-oen)}$	Delay time, output clock gpmc_clk rising edge to output enable gpmc_oen transition		H[13] – 2.3	H[13] + 3.5	H[13] – 3.3	H[13] + 8.5	ns
F11	$t_{d(clkH-oenIV)}$	Delay time, output clock gpmc_clk rising edge to output enable gpmc_oen invalid		H[13] – 2.3	H[13] + 3.5	H[13] – 3.3	H[13] + 8.5	ns
F14	$t_{d(clkH-wen)}$	Delay time, output clock gpmc_clk rising edge to output write enable gpmc_wen transition		I[14] – 2.3	I[14] + 4.5	I[14] – 3.3	I[14] + 9.5	ns
F15	$t_{d(clkH-do)}$	Delay time, output clock gpmc_clk rising edge to output data gpmc_ad[15:0] transition[8]		J[15] – 2.3	J[15] + 2.7	J[15] – 3.3	J[15] + 7.7	ns
F15	$t_{d(clkL-do)}$	Delay time, gpmc_clk falling edge to gpmc_ad[15:0] data bus transition[10]		J[15] – 2.3	J[15] + 2.7	J[15] – 3.3	J[15] + 7.7	ns
F15	$t_{d(clkL-do)}$	Delay time, gpmc_clk falling edge to gpmc_ad[15:0] data bus transition[11]		J[15] – 2.3	J[15] + 2.7	J[15] – 3.3	J[15] + 12.7	ns
F17	$t_{d(clkH-be[x]n)}$	Delay time, output clock gpmc_clk rising edge to output lower byte enable and command latch enable gpmc_be0n_cle transition[8]		J[15] – 2.3	J[15] + 1.9	J[15] – 3.3	J[15] + 6.9	ns
F17	$t_{d(clkL-be[x]n)}$	Delay time, gpmc_clk falling edge to gpmc_nbe0_cle, gpmc_nbe1 transition[10]		J[15] – 2.3	J[15] + 1.9	J[15] – 3.3	J[15] + 6.9	ns
F17	$t_{d(clkL-be[x]n)}$	Delay time, gpmc_clk falling edge to gpmc_nbe0_cle, gpmc_nbe1 transition[11]		J[15] – 2.3	J[15] + 1.9	J[15] – 3.3	J[15] + 11.9	ns
F18	$t_{w(csnV)}$	Pulse duration, output chip select gpmc_csn[x][4] low	Read	A[16]		A[16]		ns
			Write	A[16]		A[16]		ns
F19	$t_{w(be[x]nV)}$	Pulse duration, output lower byte enable and command latch enable gpmc_be0n_cle, output upper byte enable gpmc_be1n low	Read	C[17]		C[17]		ns
			Write	C[17]		C[17]		ns

Copyright © 2014–2019, Texas Instruments Incorporated

Table 5-39. GPMC and NOR Flash Switching Characteristics—Synchronous Mode (continued)

NO.	PARAMETER			OPP100		OPP50		UNIT
				MIN	MAX	MIN	MAX	
F20	$t_{w(advnV)}$	Pulse duration, output address valid and address latch enable gpmc_advn_ale low	Read	K[18]		K[18]		ns
			Write	K[18]		K[18]		ns

(1) Related to the gpmc_clk output clock maximum and minimum frequencies programmable in the GPMC module by setting the GPMC_CONFIG1_CSx configuration register bit field GpmcFCLKDivider.

(2) P = gpmc_clk period in ns

(3) The jitter probability density can be approximated by a Gaussian function.

(4) In gpmc_csn[x], x is equal to 0, 1, 2, 3, 4, 5, or 6. In gpmc_wait[x], x is equal to 0 or 1.

(5) For csn falling edge (CS activated):
- Case GpmcFCLKDivider = 0:
  - F = 0.5 × CSExtraDelay × GPMC_FCLK[19]
- Case GpmcFCLKDivider = 1:
  - F = 0.5 × CSExtraDelay × GPMC_FCLK[19] if (ClkActivationTime and CSOnTime are odd) or (ClkActivationTime and CSOnTime are even)
  - F = (1 + 0.5 × CSExtraDelay) × GPMC_FCLK[19] otherwise
- Case GpmcFCLKDivider = 2:
  - F = 0.5 × CSExtraDelay × GPMC_FCLK[19] if ((CSOnTime – ClkActivationTime) is a multiple of 3)
  - F = (1 + 0.5 × CSExtraDelay) × GPMC_FCLK[19] if ((CSOnTime – ClkActivationTime – 1) is a multiple of 3)
  - F = (2 + 0.5 × CSExtraDelay) × GPMC_FCLK[19] if ((CSOnTime – ClkActivationTime – 2) is a multiple of 3)

(6) For single read: E = (CSRdOffTime – AccessTime) × (TimeParaGranularity + 1) × GPMC_FCLK[19]
For burst read: E = (CSRdOffTime – AccessTime) × (TimeParaGranularity + 1) × GPMC_FCLK[19]
For burst write: E = (CSWrOffTime – AccessTime) × (TimeParaGranularity + 1) × GPMC_FCLK[19]

(7) B = ClkActivationTime × GPMC_FCLK[19]

(8) First transfer only for CLK DIV 1 mode.

(9) For single read: D = (RdCycleTime – AccessTime) × (TimeParaGranularity + 1) × GPMC_FCLK[19]
For burst read: D = (RdCycleTime – AccessTime) × (TimeParaGranularity + 1) × GPMC_FCLK[19]
For burst write: D = (WrCycleTime – AccessTime) × (TimeParaGranularity + 1) × GPMC_FCLK[19]

(10) Half cycle; for all data after initial transfer for CLK DIV 1 mode.

(11) Half cycle of GPMC_CLK_OUT; for all data for modes other than CLK DIV 1 mode. GPMC_CLK_OUT divide down from GPMC_FCLK.

(12) For ADV falling edge (ADV activated):
- Case GpmcFCLKDivider = 0:
  - G = 0.5 × ADVExtraDelay × GPMC_FCLK[19]
- Case GpmcFCLKDivider = 1:
  - G = 0.5 × ADVExtraDelay × GPMC_FCLK[19] if (ClkActivationTime and ADVOnTime are odd) or (ClkActivationTime and ADVOnTime are even)
  - G = (1 + 0.5 × ADVExtraDelay) × GPMC_FCLK[19] otherwise
- Case GpmcFCLKDivider = 2:
  - G = 0.5 × ADVExtraDelay × GPMC_FCLK[19] if ((ADVOnTime – ClkActivationTime) is a multiple of 3)
  - G = (1 + 0.5 × ADVExtraDelay) × GPMC_FCLK[19] if ((ADVOnTime – ClkActivationTime – 1) is a multiple of 3)
  - G = (2 + 0.5 × ADVExtraDelay) × GPMC_FCLK[19] if ((ADVOnTime – ClkActivationTime – 2) is a multiple of 3)

For ADV rising edge (ADV deactivated) in Reading mode:
- Case GpmcFCLKDivider = 0:
  - G = 0.5 × ADVExtraDelay × GPMC_FCLK[19]
- Case GpmcFCLKDivider = 1:
  - G = 0.5 × ADVExtraDelay × GPMC_FCLK[19] if (ClkActivationTime and ADVRdOffTime are odd) or (ClkActivationTime and ADVRdOffTime are even)
  - G = (1 + 0.5 × ADVExtraDelay) × GPMC_FCLK[19] otherwise
- Case GpmcFCLKDivider = 2:
  - G = 0.5 × ADVExtraDelay × GPMC_FCLK[19] if ((ADVRdOffTime – ClkActivationTime) is a multiple of 3)
  - G = (1 + 0.5 × ADVExtraDelay) × GPMC_FCLK[19] if ((ADVRdOffTime – ClkActivationTime – 1) is a multiple of 3)
  - G = (2 + 0.5 × ADVExtraDelay) × GPMC_FCLK[19] if ((ADVRdOffTime – ClkActivationTime – 2) is a multiple of 3)

For ADV rising edge (ADV deactivated) in Writing mode:
- Case GpmcFCLKDivider = 0:
  - G = 0.5 × ADVExtraDelay × GPMC_FCLK[19]
- Case GpmcFCLKDivider = 1:
  - G = 0.5 × ADVExtraDelay × GPMC_FCLK[19] if (ClkActivationTime and ADVWrOffTime are odd) or (ClkActivationTime and ADVWrOffTime are even)
  - G = (1 + 0.5 × ADVExtraDelay) × GPMC_FCLK[19] otherwise
- Case GpmcFCLKDivider = 2:
  - G = 0.5 × ADVExtraDelay × GPMC_FCLK[19] if ((ADVWrOffTime – ClkActivationTime) is a multiple of 3)

- G = (1 + 0.5 × ADVExtraDelay) × GPMC_FCLK[19] if ((ADVWrOffTime – ClkActivationTime – 1) is a multiple of 3)
- G = (2 + 0.5 × ADVExtraDelay) × GPMC_FCLK[19] if ((ADVWrOffTime – ClkActivationTime – 2) is a multiple of 3)

(13) For OE falling edge (OE activated) and IO DIR rising edge (Data Bus input direction):

- Case GpmcFCLKDivider = 0:
  - H = 0.5 × OEExtraDelay × GPMC_FCLK[19]
- Case GpmcFCLKDivider = 1:
  - H = 0.5 × OEExtraDelay × GPMC_FCLK[19] if (ClkActivationTime and OEOnTime are odd) or (ClkActivationTime and OEOnTime are even)
  - H = (1 + 0.5 × OEExtraDelay) × GPMC_FCLK[19] otherwise
- Case GpmcFCLKDivider = 2:
  - H = 0.5 × OEExtraDelay × GPMC_FCLK[19] if ((OEOnTime – ClkActivationTime) is a multiple of 3)
  - H = (1 + 0.5 × OEExtraDelay) × GPMC_FCLK[19] if ((OEOnTime – ClkActivationTime – 1) is a multiple of 3)
  - H = (2 + 0.5 × OEExtraDelay) × GPMC_FCLK[19] if ((OEOnTime – ClkActivationTime – 2) is a multiple of 3)

For OE rising edge (OE deactivated):

- Case GpmcFCLKDivider = 0:
  - H = 0.5 × OEExtraDelay × GPMC_FCLK[19]
- Case GpmcFCLKDivider = 1:
  - H = 0.5 × OEExtraDelay × GPMC_FCLK[19] if (ClkActivationTime and OEOffTime are odd) or (ClkActivationTime and OEOffTime are even)
  - H = (1 + 0.5 × OEExtraDelay) × GPMC_FCLK[19] otherwise
- Case GpmcFCLKDivider = 2:
  - H = 0.5 × OEExtraDelay × GPMC_FCLK[19] if ((OEOffTime – ClkActivationTime) is a multiple of 3)
  - H = (1 + 0.5 × OEExtraDelay) × GPMC_FCLK[19] if ((OEOffTime – ClkActivationTime – 1) is a multiple of 3)
  - H = (2 + 0.5 × OEExtraDelay) × GPMC_FCLK[19] if ((OEOffTime – ClkActivationTime – 2) is a multiple of 3)

(14) For WE falling edge (WE activated):

- Case GpmcFCLKDivider = 0:
  - I = 0.5 × WEExtraDelay × GPMC_FCLK[19]
- Case GpmcFCLKDivider = 1:
  - I = 0.5 × WEExtraDelay × GPMC_FCLK[19] if (ClkActivationTime and WEOnTime are odd) or (ClkActivationTime and WEOnTime are even)
  - I = (1 + 0.5 × WEExtraDelay) × GPMC_FCLK[19] otherwise
- Case GpmcFCLKDivider = 2:
  - I = 0.5 × WEExtraDelay × GPMC_FCLK[19] if ((WEOnTime – ClkActivationTime) is a multiple of 3)
  - I = (1 + 0.5 × WEExtraDelay) × GPMC_FCLK[19] if ((WEOnTime – ClkActivationTime – 1) is a multiple of 3)
  - I = (2 + 0.5 × WEExtraDelay) × GPMC_FCLK[19] if ((WEOnTime – ClkActivationTime – 2) is a multiple of 3)

For WE rising edge (WE deactivated):

- Case GpmcFCLKDivider = 0:
  - I = 0.5 × WEExtraDelay × GPMC_FCLK [19]
- Case GpmcFCLKDivider = 1:
  - I = 0.5 × WEExtraDelay × GPMC_FCLK[19] if (ClkActivationTime and WEOffTime are odd) or (ClkActivationTime and WEOffTime are even)
  - I = (1 + 0.5 × WEExtraDelay) × GPMC_FCLK[19] otherwise
- Case GpmcFCLKDivider = 2:
  - I = 0.5 × WEExtraDelay × GPMC_FCLK[19] if ((WEOffTime – ClkActivationTime) is a multiple of 3)
  - I = (1 + 0.5 × WEExtraDelay) × GPMC_FCLK[19] if ((WEOffTime – ClkActivationTime – 1) is a multiple of 3)
  - I = (2 + 0.5 × WEExtraDelay) × GPMC_FCLK[19] if ((WEOffTime – ClkActivationTime – 2) is a multiple of 3)

(15) J = GPMC_FCLK[19]

(16) For single read: A = (CSRdOffTime – CSOnTime) × (TimeParaGranularity + 1) × GPMC_FCLK[19]
For burst read: A = (CSRdOffTime – CSOnTime + (n – 1) × PageBurstAccessTime) × (TimeParaGranularity + 1) × GPMC_FCLK[19]
For burst write: A = (CSWrOffTime – CSOnTime + (n – 1) × PageBurstAccessTime) × (TimeParaGranularity + 1) × GPMC_FCLK[19]
With n being the page burst access number.

(17) For single read: C = RdCycleTime × (TimeParaGranularity + 1) × GPMC_FCLK[19]
For burst read: C = (RdCycleTime + (n – 1) × PageBurstAccessTime) × (TimeParaGranularity + 1) × GPMC_FCLK[19]
For burst write: C = (WrCycleTime + (n – 1) × PageBurstAccessTime) × (TimeParaGranularity + 1) × GPMC_FCLK[19]
With n being the page burst access number.

(18) For read: K = (ADVRdOffTime – ADVOnTime) × (TimeParaGranularity + 1) × GPMC_FCLK[19]
For write: K = (ADVWrOffTime – ADVOnTime) × (TimeParaGranularity + 1) × GPMC_FCLK[19]

(19) GPMC_FCLK is general-purpose memory controller internal functional clock period in ns.

Copyright © 2014–2019, Texas Instruments Incorporated

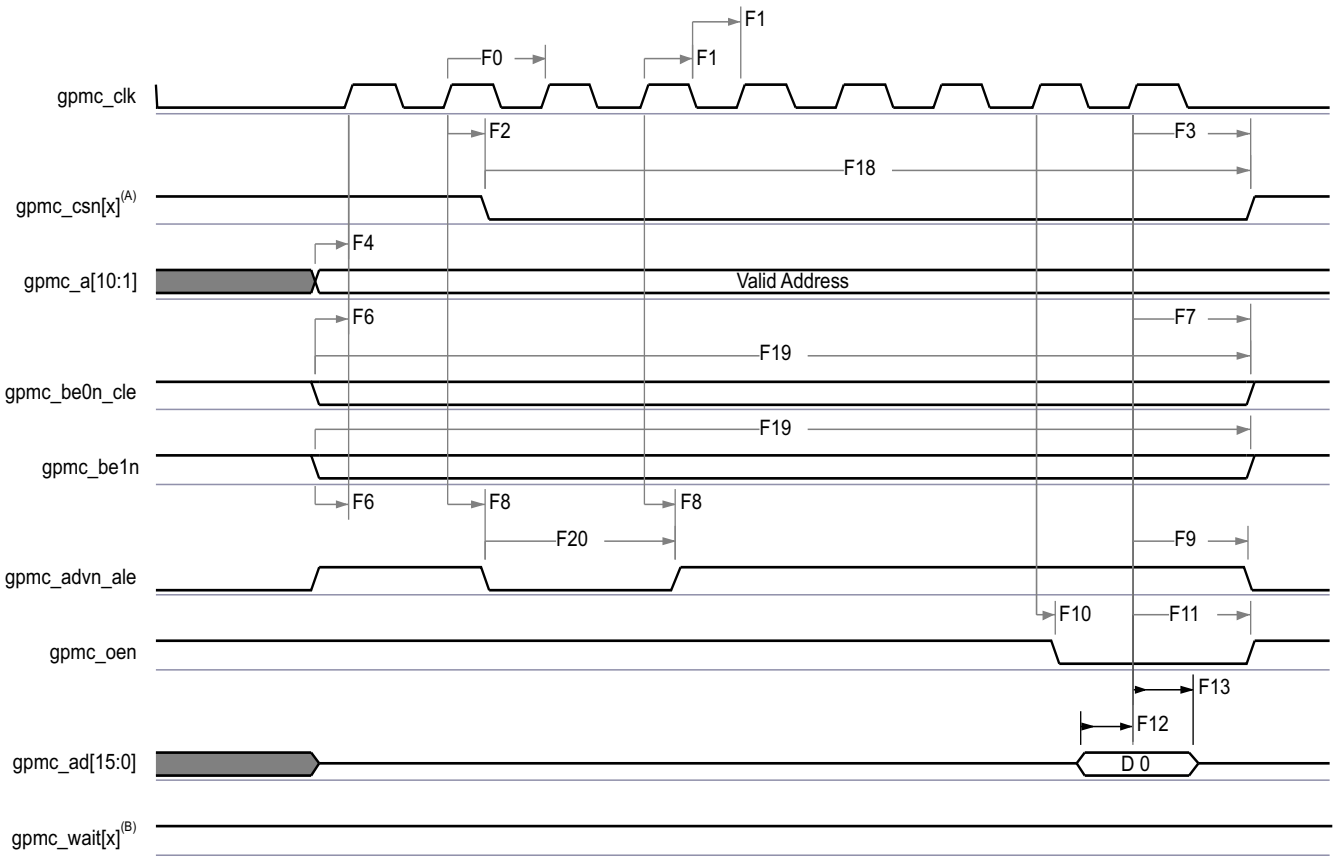

A. In gpmc_csn[x], x is equal to 0, 1, 2, 3, 4, 5, or 6.
B. In gpmc_wait[x], x is equal to 0 or 1.

Figure 5-33. GPMC and NOR Flash—Synchronous Single Read—(GpmcFCLKDivider = 0)

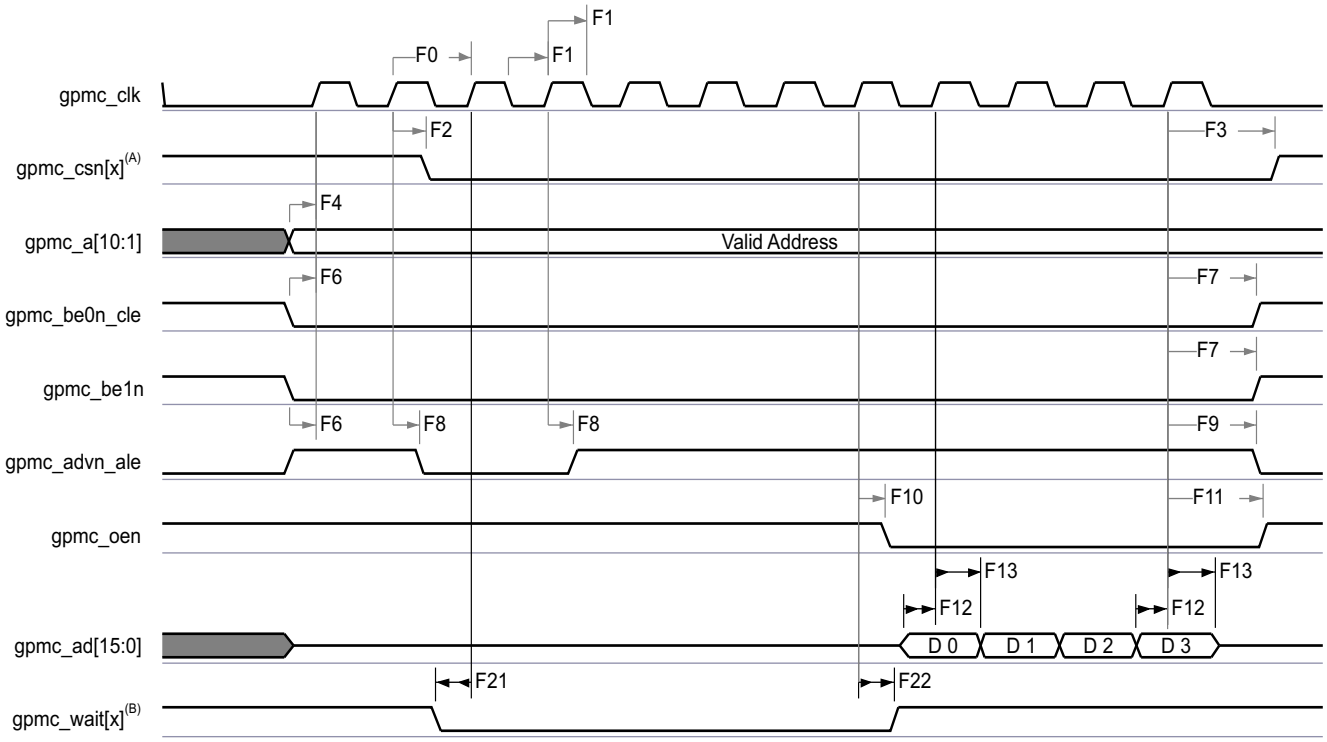

A. In gpmc_csn[x], x is equal to 0, 1, 2, 3, 4, 5, or 6.
B. In gpmc_wait[x], x is equal to 0 or 1.

Figure 5-34. GPMC and NOR Flash—Synchronous Burst Read—4x16-bit (GpmcFCLKDivider = 0)

Copyright © 2014–2019, Texas Instruments Incorporated

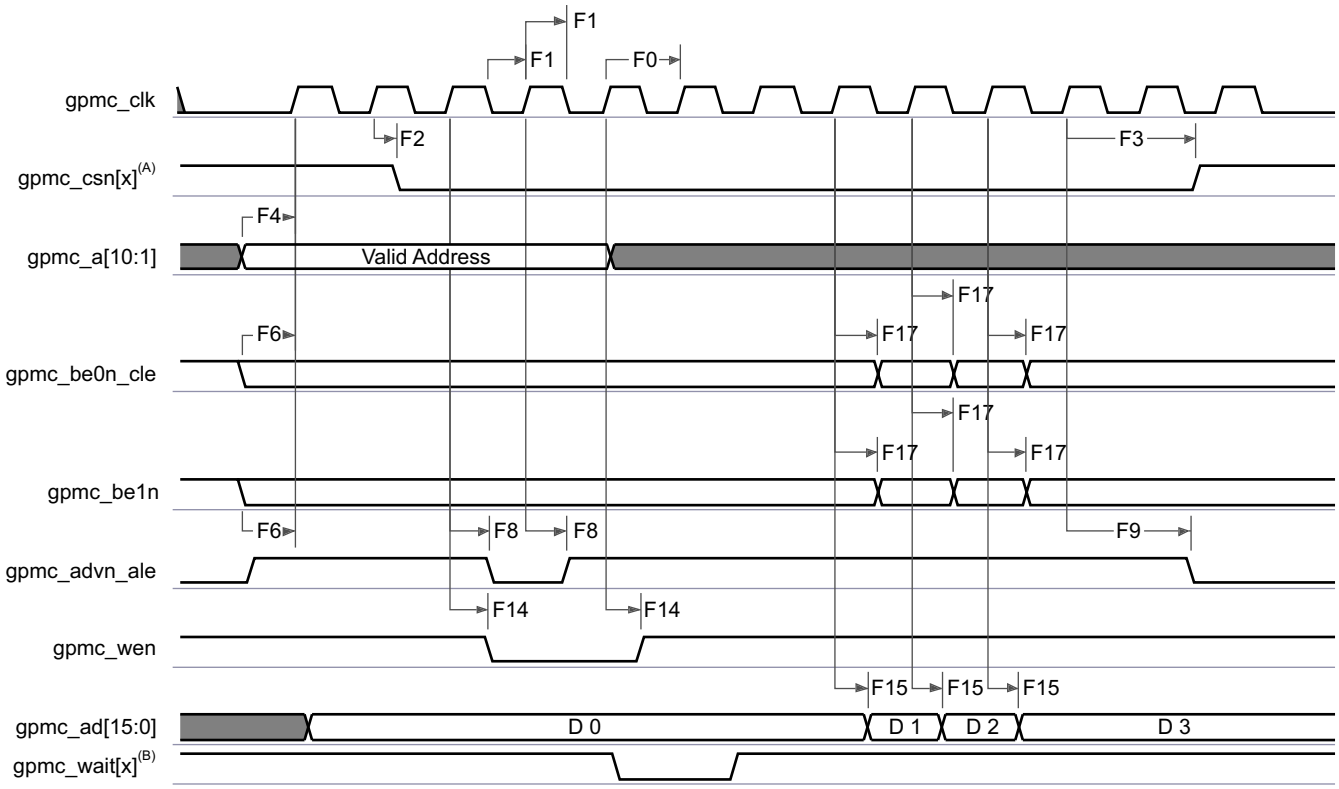

A. In gpmc_csn[x], x is equal to 0, 1, 2, 3, 4, 5, or 6.
B. In gpmc_wait[x], x is equal to 0 or 1.

Figure 5-35. GPMC and NOR Flash—Synchronous Burst Write—(GpmcFCLKDivider > 0)

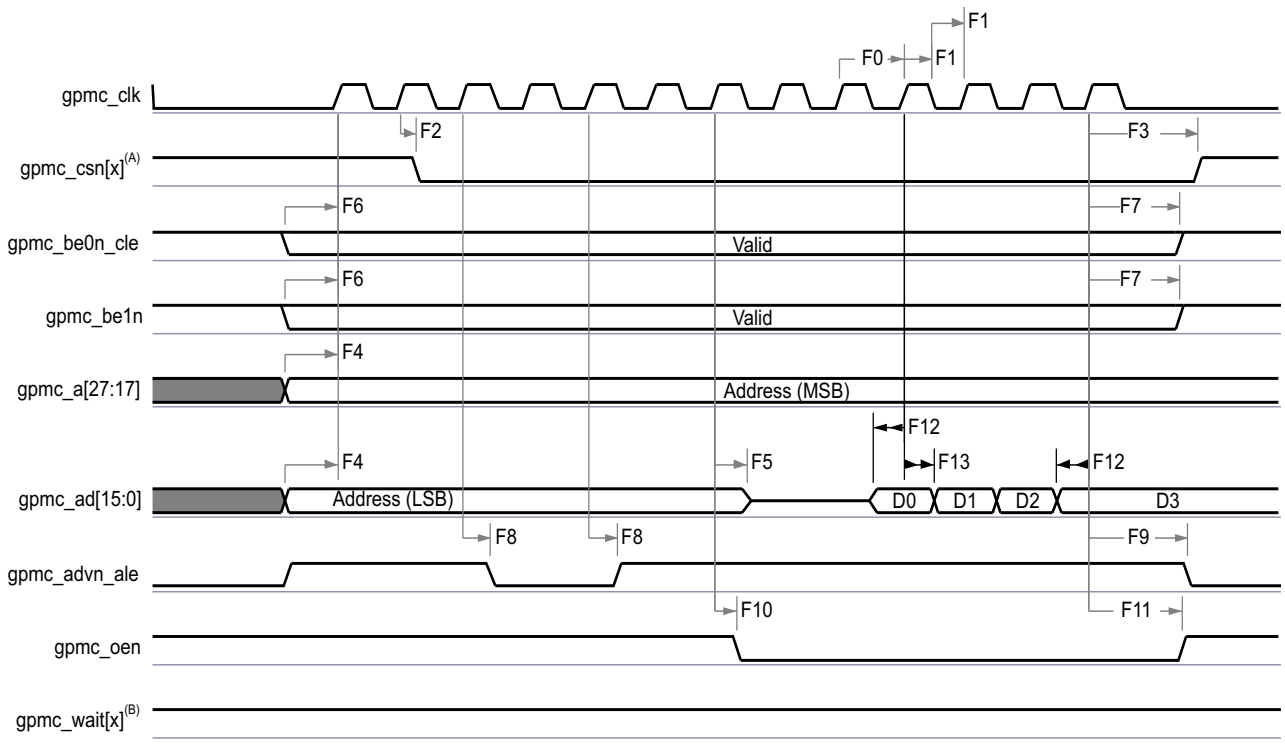

A. In gpmc_csn[x], x is equal to 0, 1, 2, 3, 4, 5, or 6.
B. In gpmc_wait[x], x is equal to 0 or 1.

Figure 5-36. GPMC and Multiplexed NOR Flash—Synchronous Burst Read

Copyright © 2014–2019, Texas Instruments Incorporated

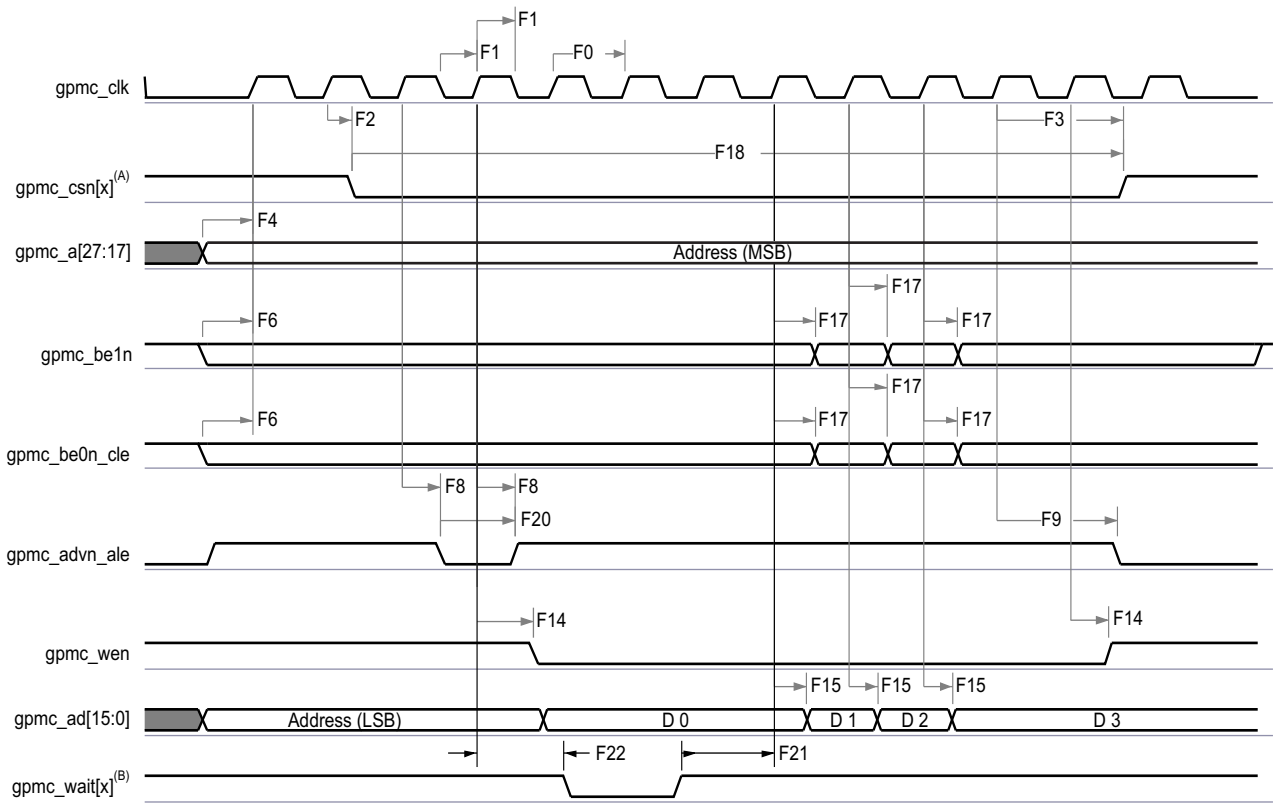

A. In gpmc_csn[x], x is equal to 0, 1, 2, 3, 4, 5, or 6.
B. In gpmc_wait[x], x is equal to 0 or 1.

Figure 5-37. GPMC and Multiplexed NOR Flash—Synchronous Burst Write

5.12.8.1.2 GPMC and NOR Flash—Asynchronous Mode

Table 5-41 and Table 5-42 assume testing over the recommended operating conditions and electrical characteristic conditions below (see Figure 5-38 through Figure 5-43).

Table 5-40. GPMC and NOR Flash Timing Conditions—Asynchronous Mode

TIMING CONDITION PARAMETER		MIN	TYP	MAX	UNIT
Input Conditions					
t_R	Input signal rise time	0.3		1.8	ns
t_F	Input signal fall time	0.3		1.8	ns
Output Condition					
C_{LOAD}	Output load capacitance	3		30	pF

Table 5-41. GPMC and NOR Flash Internal Timing Parameters—Asynchronous Mode[(1)(2)]

NO.		OPP100		OPP50		UNIT
		MIN	MAX	MIN	MAX	
FI1	Delay time, output data gpmc_ad[15:0] generation from internal functional clock GPMC_FCLK[(3)]		6.5		6.5	ns
FI2	Delay time, input data gpmc_ad[15:0] capture from internal functional clock GPMC_FCLK[(3)]		4		4	ns
FI3	Delay time, output chip select gpmc_csn[x] generation from internal functional clock GPMC_FCLK[(3)]		6.5		6.5	ns
FI4	Delay time, output address gpmc_a[27:1] generation from internal functional clock GPMC_FCLK[(3)]		6.5		6.5	ns
FI5	Delay time, output address gpmc_a[27:1] valid from internal functional clock GPMC_FCLK[(3)]		6.5		6.5	ns
FI6	Delay time, output lower-byte enable and command latch enable gpmc_be0n_cle, output upper-byte enable gpmc_be1n generation from internal functional clock GPMC_FCLK[(3)]		6.5		6.5	ns
FI7	Delay time, output enable gpmc_oen generation from internal functional clock GPMC_FCLK[(3)]		6.5		6.5	ns
FI8	Delay time, output write enable gpmc_wen generation from internal functional clock GPMC_FCLK[(3)]		6.5		6.5	ns
FI9	Skew, internal functional clock GPMC_FCLK[(3)]		100		100	ps

(1) The internal parameters table must be used to calculate data access time stored in the corresponding CS register bit field.

(2) Internal parameters are referred to the GPMC functional internal clock which is not provided externally.

(3) GPMC_FCLK is general-purpose memory controller internal functional clock.

Copyright © 2014–2019, Texas Instruments Incorporated

Table 5-42. GPMC and NOR Flash Timing Requirements—Asynchronous Mode

NO.			OPP100		OPP50		UNIT
			MIN	MAX	MIN	MAX	
FA5[1]	$t_{acc(d)}$	Data access time		H[4]		H[4]	ns
FA20[2]	$t_{acc1\text{-}pgmode(d)}$	Page mode successive data access time		P[5]		P[5]	ns
FA21[3]	$t_{acc2\text{-}pgmode(d)}$	Page mode first data access time		H[4]		H[4]	ns

(1) The FA5 parameter illustrates the amount of time required to internally sample input data. It is expressed in number of GPMC functional clock cycles. From start of read cycle and after FA5 functional clock cycles, input data is internally sampled by active functional clock edge. FA5 value must be stored inside the AccessTime register bit field.

(2) The FA20 parameter illustrates amount of time required to internally sample successive input page data. It is expressed in number of GPMC functional clock cycles. After each access to input page data, next input page data is internally sampled by active functional clock edge after FA20 functional clock cycles. The FA20 value must be stored in the PageBurstAccessTime register bit field.

(3) The FA21 parameter illustrates amount of time required to internally sample first input page data. It is expressed in number of GPMC functional clock cycles. From start of read cycle and after FA21 functional clock cycles, first input page data is internally sampled by active functional clock edge. FA21 value must be stored inside the AccessTime register bit field.

(4) H = AccessTime × (TimeParaGranularity + 1) × GPMC_FCLK[6]

(5) P = PageBurstAccessTime × (TimeParaGranularity + 1) × GPMC_FCLK[6]

(6) GPMC_FCLK is general-purpose memory controller internal functional clock period in ns.

Table 5-43. GPMC and NOR Flash Switching Characteristics—Asynchronous Mode

NO.	PARAMETER			OPP100		OPP50		UNIT
				MIN	MAX	MIN	MAX	
FA0	$t_{w(be[x]nV)}$	Pulse duration, output lower-byte enable and command latch enable gpmc_be0n_cle, output upper-byte enable gpmc_be1n valid time	Read		N[1]		N[1]	ns
			Write		N[1]		N[1]	
FA1	$t_{w(csnV)}$	Pulse duration, output chip select gpmc_csn[x][2] low	Read		A[3]		A[3]	ns
			Write		A[3]		A[3]	
FA3	$t_{d(csnV\text{-}advnIV)}$	Delay time, output chip select gpmc_csn[x][2] valid to output address valid and address latch enable gpmc_advn_ale invalid	Read	B[4] – 0.2	B[4] + 2.0	B[4] – 0.2	B[4] + 2.0	ns
			Write	B[4] – 0.2	B[4] + 2.0	B[4] – 0.2	B[4] + 2.0	
FA4	$t_{d(csnV\text{-}oenIV)}$	Delay time, output chip select gpmc_csn[x][2] valid to output enable gpmc_oen invalid (Single read)		C[5] – 0.2	C[5] + 2.0	C[5] – 0.2	C[5] + 2.0	ns
FA9	$t_{d(aV\text{-}csnV)}$	Delay time, output address gpmc_a[27:1] valid to output chip select gpmc_csn[x][2] valid		J[6] – 0.2	J[6] + 2.0	J[6] – 0.2	J[6] + 2.0	ns
FA10	$t_{d(be[x]nV\text{-}csnV)}$	Delay time, output lower-byte enable and command latch enable gpmc_be0n_cle, output upper-byte enable gpmc_be1n valid to output chip select gpmc_csn[x][2] valid		J[6] – 0.2	J[6] + 2.0	J[6] – 0.2	J[6] + 2.0	ns
FA12	$t_{d(csnV\text{-}advnV)}$	Delay time, output chip select gpmc_csn[x][2] valid to output address valid and address latch enable gpmc_advn_ale valid		K[7] – 0.2	K[7] + 2.0	K[7] – 0.2	K[7] + 2.0	ns
FA13	$t_{d(csnV\text{-}oenV)}$	Delay time, output chip select gpmc_csn[x][2] valid to output enable gpmc_oen valid		L[8] – 0.2	L[8] + 2.0	L [8] – 0.2	L[8] + 2.0	ns
FA16	$t_{w(aIV)}$	Pulse durationm output address gpmc_a[26:1] invalid between 2 successive read and write accesses		G[9]		G[9]		ns
FA18	$t_{d(csnV\text{-}oenIV)}$	Delay time, output chip select gpmc_csn[x][2] valid to output enable gpmc_oen invalid (Burst read)		I[10] – 0.2	I[10] + 2.0	I[10] – 0.2	I[10] + 2.0	ns
FA20	$t_{w(aV)}$	Pulse duration, output address gpmc_a[27:1] valid — 2nd, 3rd, and 4th accesses		D[11]		D[11]		ns
FA25	$t_{d(csnV\text{-}wenV)}$	Delay time, output chip select gpmc_csn[x][2] valid to output write enable gpmc_wen valid		E[12] – 0.2	E[12] + 2.0	E[12] – 0.2	E[12] + 2.0	ns
FA27	$t_{d(csnV\text{-}wenIV)}$	Delay time, output chip select gpmc_csn[x][2] valid to output write enable gpmc_wen invalid		F[13] – 0.2	F[13] + 2.0	F[13] – 0.2	F[13] + 2.0	ns

Table 5-43. GPMC and NOR Flash Switching Characteristics—Asynchronous Mode (continued)

NO.	PARAMETER		OPP100		OPP50		UNIT
			MIN	MAX	MIN	MAX	
FA28	$t_{d(wenV-dV)}$	Delay time, output write enable gpmc_ wen valid to output data gpmc_ad[15:0] valid		2.8		5	ns
FA29	$t_{d(dV-csnV)}$	Delay time, output data gpmc_ad[15:0] valid to output chip select gpmc_csn[x][(2)] valid	J[(6)] – 0.2	J[(6)] + 2.8	J[(6)] – 0.2	J[(6)] + 2.8	ns
FA37	$t_{d(oenV-alV)}$	Delay time, output enable gpmc_oen valid to output address gpmc_ad[15:0] phase end		2.8		2.8	ns

(1) For single read: N = RdCycleTime × (TimeParaGranularity + 1) × GPMC_FCLK[(14)]
For single write: N = WrCycleTime × (TimeParaGranularity + 1) × GPMC_FCLK[(14)]
For burst read: N = (RdCycleTime + (n – 1) × PageBurstAccessTime) × (TimeParaGranularity + 1) × GPMC_FCLK[(14)]
For burst write: N = (WrCycleTime + (n – 1) × PageBurstAccessTime) × (TimeParaGranularity + 1) × GPMC_FCLK[(14)]

(2) In gpmc_csn[x], x is equal to 0, 1, 2, 3, 4, 5, or 6.

(3) For single read: A = (CSRdOffTime – CSOnTime) × (TimeParaGranularity + 1) × GPMC_FCLK[(14)]
For single write: A = (CSWrOffTime – CSOnTime) × (TimeParaGranularity + 1) × GPMC_FCLK[(14)]
For burst read: A = (CSRdOffTime – CSOnTime + (n – 1) × PageBurstAccessTime) × (TimeParaGranularity + 1) × GPMC_FCLK[(14)]
For burst write: A = (CSWrOffTime – CSOnTime + (n – 1) × PageBurstAccessTime) × (TimeParaGranularity + 1) × GPMC_FCLK[(14)]
with n being the page burst access number

(4) For reading: B = ((ADVRdOffTime – CSOnTime) × (TimeParaGranularity + 1) + 0.5 × (ADVExtraDelay – CSExtraDelay)) × GPMC_FCLK[(14)]
For writing: B = ((ADVWrOffTime – CSOnTime) × (TimeParaGranularity + 1) + 0.5 × (ADVExtraDelay – CSExtraDelay)) × GPMC_FCLK[(14)]

(5) C = ((OEOffTime – CSOnTime) × (TimeParaGranularity + 1) + 0.5 × (OEExtraDelay – CSExtraDelay)) × GPMC_FCLK[(14)]

(6) J = (CSOnTime × (TimeParaGranularity + 1) + 0.5 × CSExtraDelay) × GPMC_FCLK[(14)]

(7) K = ((ADVOnTime – CSOnTime) × (TimeParaGranularity + 1) + 0.5 × (ADVExtraDelay – CSExtraDelay)) × GPMC_FCLK[(14)]

(8) L = ((OEOnTime – CSOnTime) × (TimeParaGranularity + 1) + 0.5 × (OEExtraDelay – CSExtraDelay)) × GPMC_FCLK[(14)]

(9) G = Cycle2CycleDelay × GPMC_FCLK[(14)]

(10) I = ((OEOffTime + (n – 1) × PageBurstAccessTime – CSOnTime) × (TimeParaGranularity + 1) + 0.5 × (OEExtraDelay – CSExtraDelay)) × GPMC_FCLK[(14)]

(11) D = PageBurstAccessTime × (TimeParaGranularity + 1) × GPMC_FCLK[(14)]

(12) E = ((WEOnTime – CSOnTime) × (TimeParaGranularity + 1) + 0.5 × (WEExtraDelay – CSExtraDelay)) × GPMC_FCLK[(14)]

(13) F = ((WEOffTime – CSOnTime) × (TimeParaGranularity + 1) + 0.5 × (WEExtraDelay – CSExtraDelay)) × GPMC_FCLK[(14)]

(14) GPMC_FCLK is general-purpose memory controller internal functional clock period in ns.

Copyright © 2014–2019, Texas Instruments Incorporated

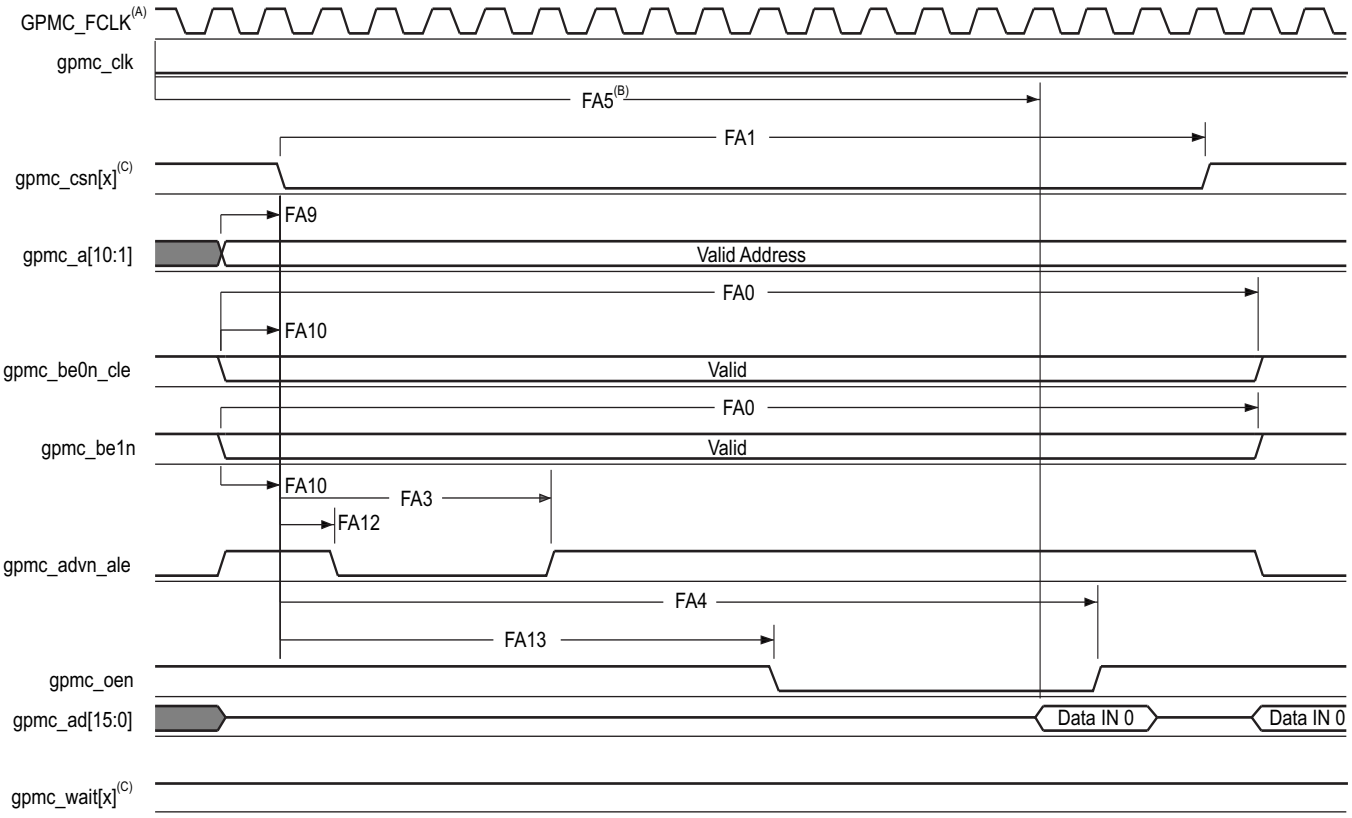

A. GPMC_FCLK is an internal clock (GPMC functional clock) not provided externally.

B. FA5 parameter illustrates amount of time required to internally sample input data. It is expressed in number of GPMC functional clock cycles. From start of read cycle and after FA5 functional clock cycles, input data will be internally sampled by active functional clock edge. FA5 value must be stored inside AccessTime register bits field.

C. In gpmc_csn[x], x is equal to 0, 1, 2, 3, 4, 5, or 6. In gpmc_wait[x], x is equal to 0 or 1.

Figure 5-38. GPMC and NOR Flash—Asynchronous Read—Single Word

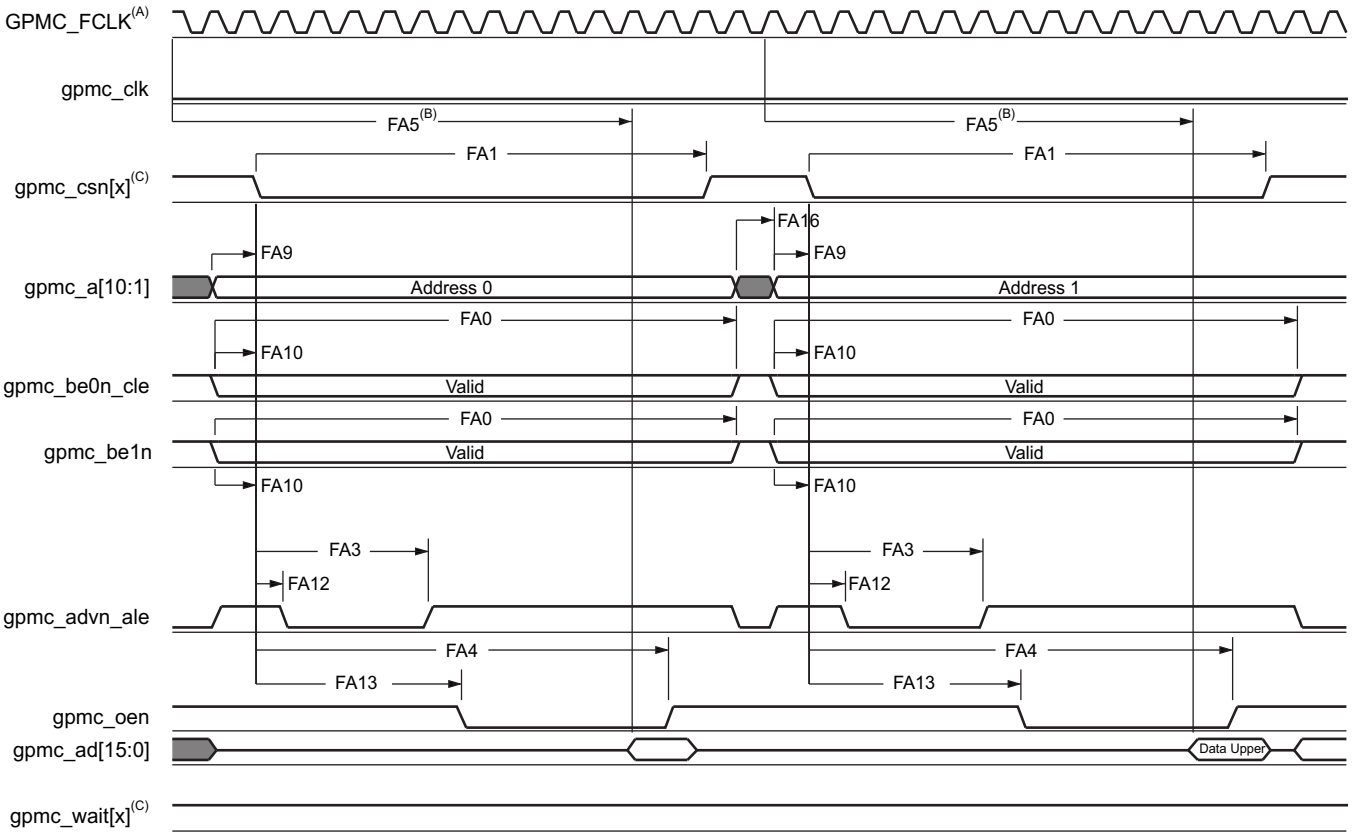

A. GPMC_FCLK is an internal clock (GPMC functional clock) not provided externally.

B. FA5 parameter illustrates amount of time required to internally sample input data. It is expressed in number of GPMC functional clock cycles. From start of read cycle and after FA5 functional clock cycles, input data will be internally sampled by active functional clock edge. FA5 value must be stored inside AccessTime register bits field.

C. In gpmc_csn[x], x is equal to 0, 1, 2, 3, 4, 5, or 6. In gpmc_wait[x], x is equal to 0 or 1.

Figure 5-39. GPMC and NOR Flash—Asynchronous Read—32-Bit

Copyright © 2014–2019, Texas Instruments Incorporated

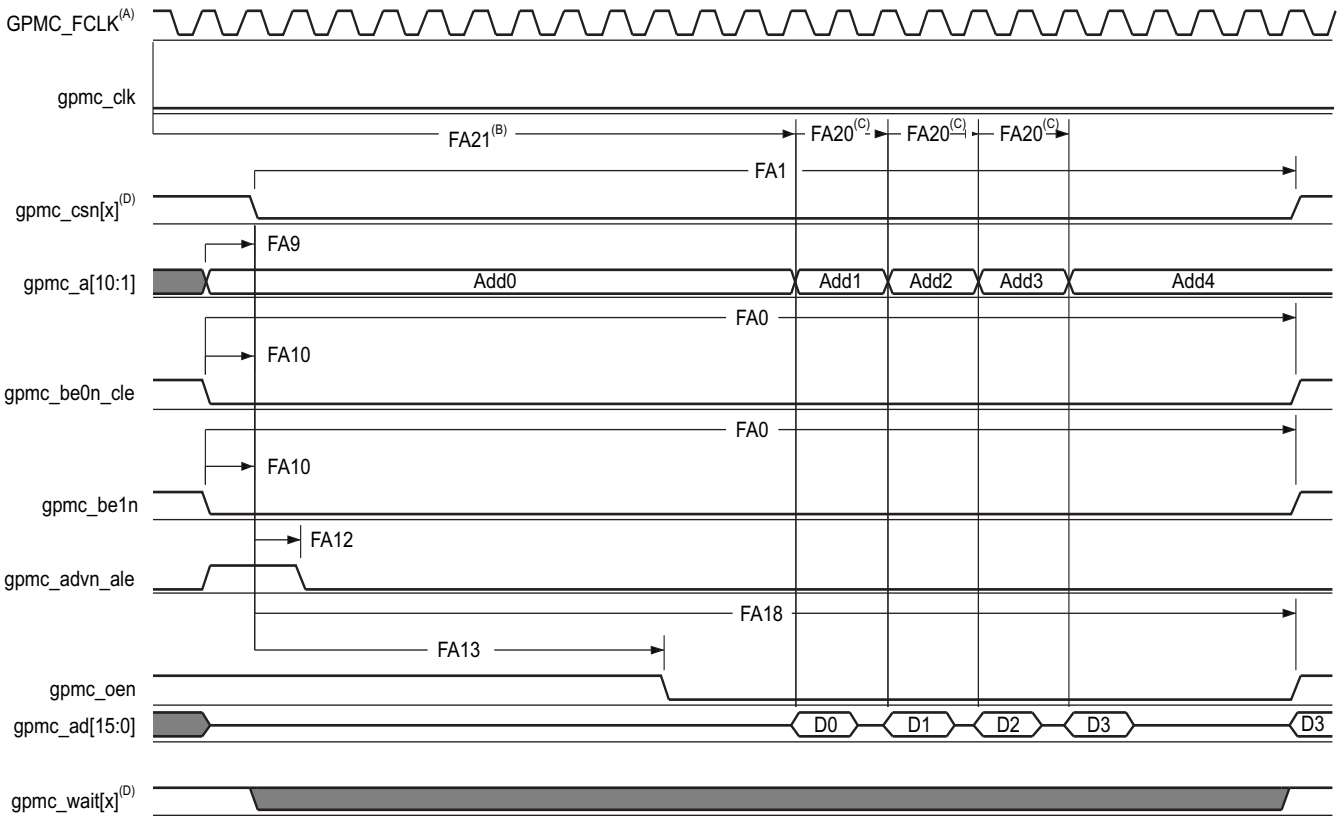

A. GPMC_FCLK is an internal clock (GPMC functional clock) not provided externally.

B. FA21 parameter illustrates amount of time required to internally sample first input page data. It is expressed in number of GPMC functional clock cycles. From start of read cycle and after FA21 functional clock cycles, first input page data will be internally sampled by active functional clock edge. FA21 calculation must be stored inside AccessTime register bits field.

C. FA20 parameter illustrates amount of time required to internally sample successive input page data. It is expressed in number of GPMC functional clock cycles. After each access to input page data, next input page data will be internally sampled by active functional clock edge after FA20 functional clock cycles. FA20 is also the duration of address phases for successive input page data (excluding first input page data). FA20 value must be stored in PageBurstAccessTime register bits field.

D. In gpmc_csn[x], x is equal to 0, 1, 2, 3, 4, 5, or 6. In gpmc_wait[x], x is equal to 0 or 1.

Figure 5-40. GPMC and NOR Flash—Asynchronous Read—Page Mode 4x16-Bit

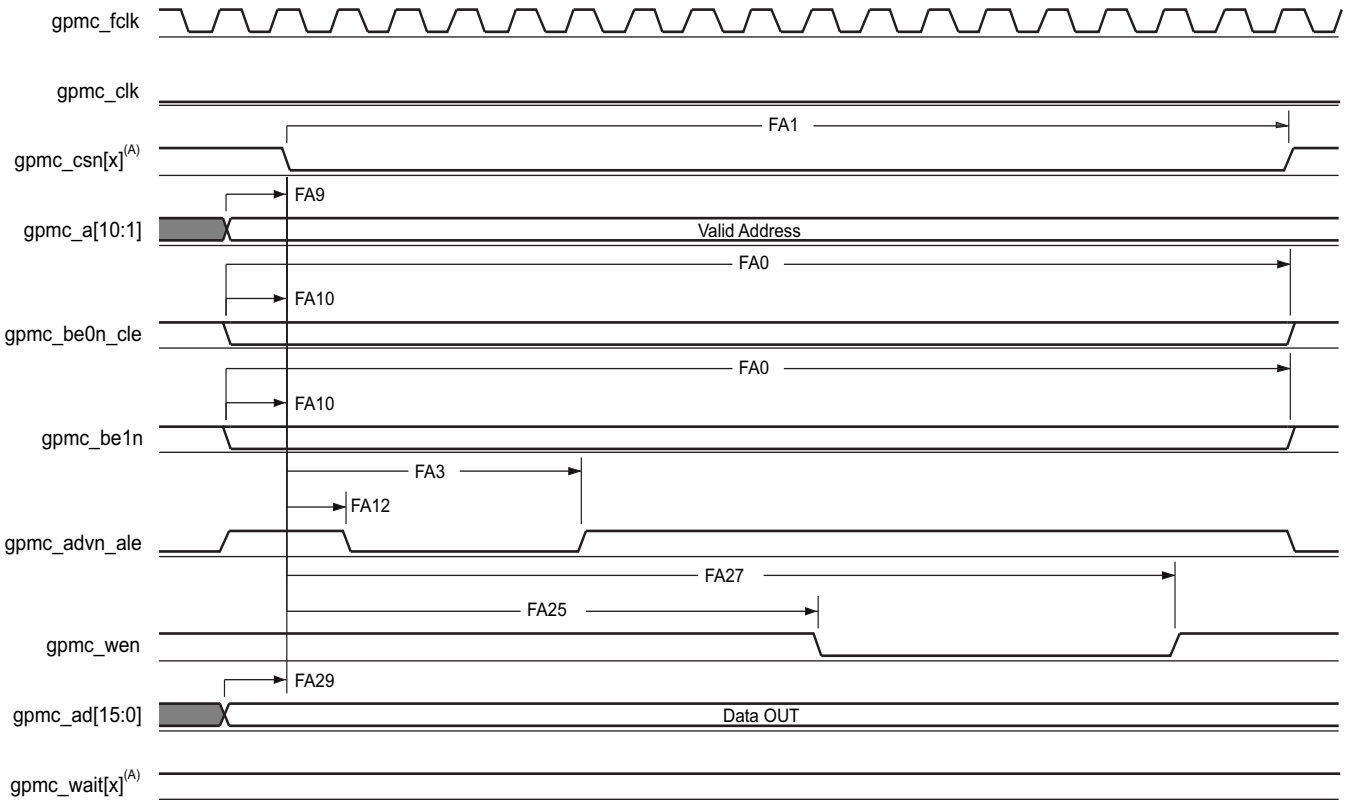

A. In gpmc_csn[x], x is equal to 0, 1, 2, 3, 4, 5, or 6. In gpmc_wait[x], x is equal to 0 or 1.

Figure 5-41. GPMC and NOR Flash—Asynchronous Write—Single Word

Copyright © 2014–2019, Texas Instruments Incorporated

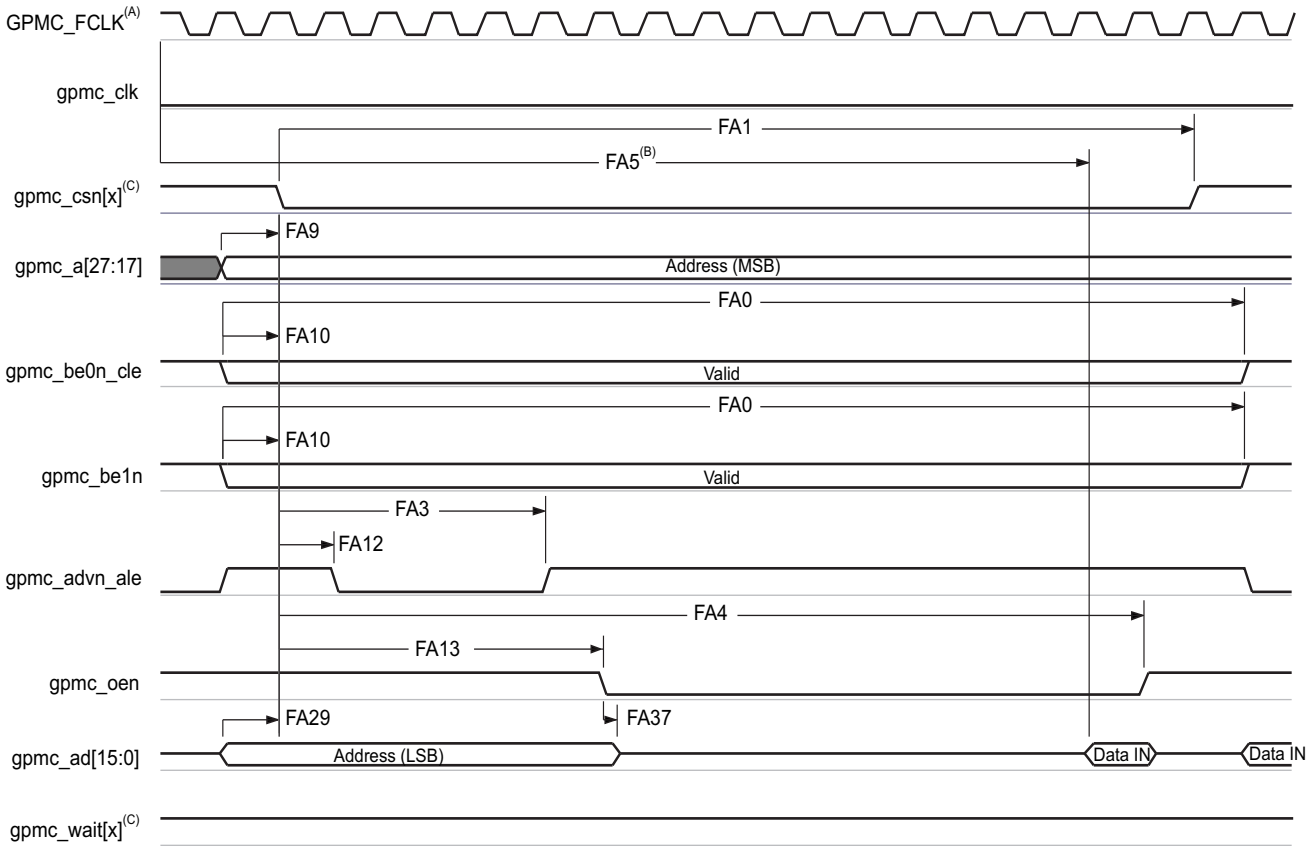

A. GPMC_FCLK is an internal clock (GPMC functional clock) not provided externally.

B. FA5 parameter illustrates amount of time required to internally sample input data. It is expressed in number of GPMC functional clock cycles. From start of read cycle and after FA5 functional clock cycles, input data will be internally sampled by active functional clock edge. FA5 value must be stored inside AccessTime register bits field.

C. In gpmc_csn[x], x is equal to 0, 1, 2, 3, 4, 5, or 6. In gpmc_wait[x], x is equal to 0 or 1.

Figure 5-42. GPMC and Multiplexed NOR Flash—Asynchronous Read—Single Word

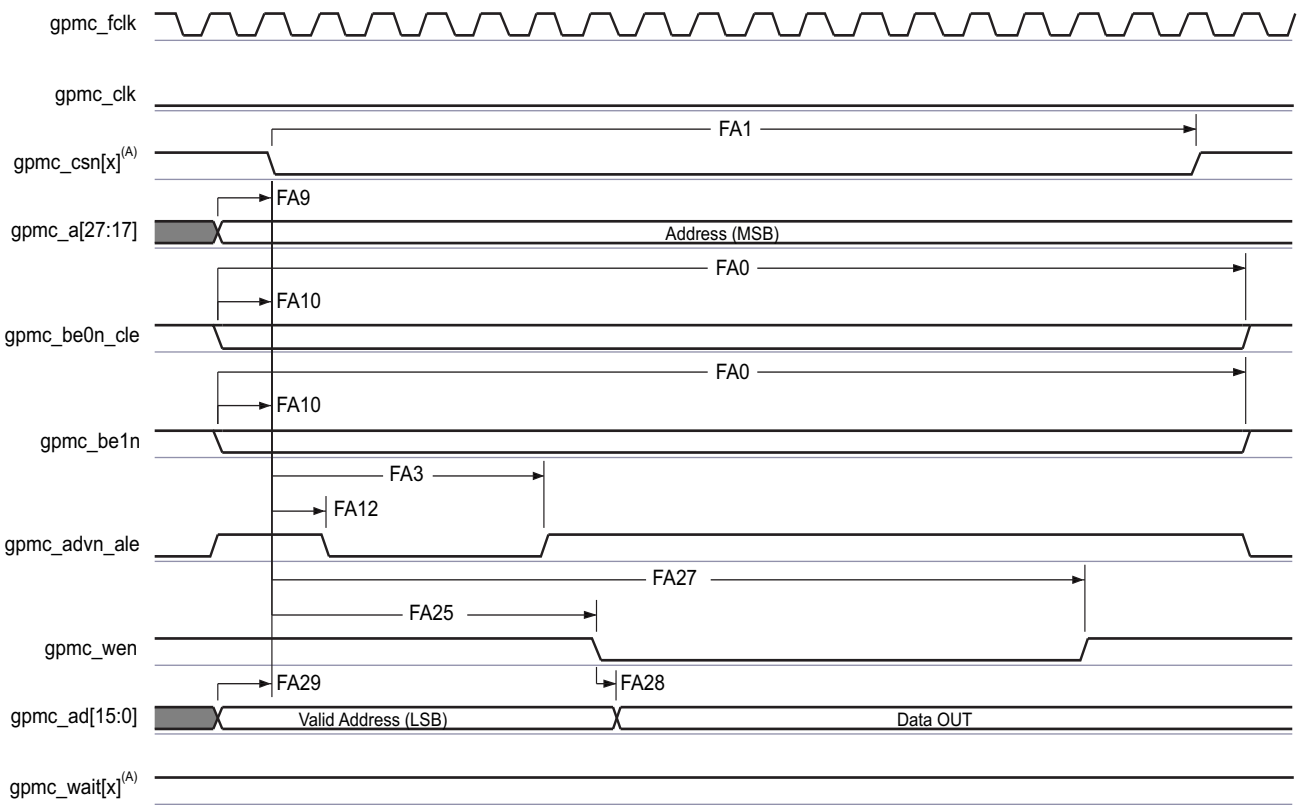

A. In gpmc_csn[x], x is equal to 0, 1, 2, 3, 4, 5, or 6. In gpmc_wait[x], x is equal to 0 or 1.

Figure 5-43. GPMC and Multiplexed NOR Flash—Asynchronous Write—Single Word

Copyright © 2014–2019, Texas Instruments Incorporated

5.12.8.1.3 GPMC and NAND Flash—Asynchronous Mode

Table 5-45 and Table 5-46 assume testing over the recommended operating conditions and electrical characteristic conditions below (see Figure 5-44 through Figure 5-47).

Table 5-44. GPMC and NAND Flash Timing Conditions—Asynchronous Mode

TIMING CONDITION PARAMETER		MIN	TYP	MAX	UNIT
Input Conditions					
t_R	Input signal rise time	0.3		1.8	ns
t_F	Input signal fall time	0.3		1.8	ns
Output Condition					
C_{LOAD}	Output load capacitance	3		30	pF

Table 5-45. GPMC and NAND Flash Internal Timing Parameters—Asynchronous Mode(1)(2)

NO.		OPP100		OPP50		UNIT
		MIN	MAX	MIN	MAX	
GNFI1	Delay time, output data gpmc_ad[15:0] generation from internal functional clock GPMC_FCLK(3)		6.5		6.5	ns
GNFI2	Delay time, input data gpmc_ad[15:0] capture from internal functional clock GPMC_FCLK(3)		4.0		4.0	ns
GNFI3	Delay time, output chip select gpmc_csn[x] generation from internal functional clock GPMC_FCLK(3)		6.5		6.5	ns
GNFI4	Delay time, output address valid and address latch enable gpmc_advn_ale generation from internal functional clock GPMC_FCLK(3)		6.5		6.5	ns
GNFI5	Delay time, output lower-byte enable and command latch enable gpmc_be0n_cle generation from internal functional clock GPMC_FCLK(3)		6.5		6.5	ns
GNFI6	Delay time, output enable gpmc_oen generation from internal functional clock GPMC_FCLK(3)		6.5		6.5	ns
GNFI7	Delay time, output write enable gpmc_wen generation from internal functional clock GPMC_FCLK(3)		6.5		6.5	ns
GNFI8	Skew, functional clock GPMC_FCLK(3)		100		100	ps

(1) Internal parameters table must be used to calculate data access time stored in the corresponding CS register bit field.

(2) Internal parameters are referred to the GPMC functional internal clock which is not provided externally.

(3) GPMC_FCLK is general-purpose memory controller internal functional clock.

Table 5-46. GPMC and NAND Flash Timing Requirements—Asynchronous Mode

NO.			OPP100		OPP50		UNIT
			MIN	MAX	MIN	MAX	
GNF12(1)	$t_{acc(d)}$	Access time, input data gpmc_ad[15:0]		J(2)		J(2)	ns

(1) The GNF12 parameter illustrates the amount of time required to internally sample input data. It is expressed in number of GPMC functional clock cycles. From start of the read cycle and after GNF12 functional clock cycles, input data is internally sampled by the active functional clock edge. The GNF12 value must be stored inside AccessTime register bit field.

(2) J = AccessTime × (TimeParaGranularity + 1) × GPMC_FCLK(3)

(3) GPMC_FCLK is general-purpose memory controller internal functional clock period in ns.

Table 5-47. GPMC and NAND Flash Switching Characteristics—Asynchronous Mode

NO.	PARAMETER		OPP100		OPP50		UNIT
			MIN	MAX	MIN	MAX	
GNF0	$t_{w(wenV)}$	Pulse duration, output write enable gpmc_wen valid	A[1]		A[1]		ns
GNF1	$t_{d(csnV-wenV)}$	Delay time, output chip select gpmc_csn[x][2] valid to output write enable gpmc_wen valid	B[3] - 0.2	B[3] + 2.0	B[3] - 0.2	B[3] + 2.0	ns
GNF2	$t_{w(cleH-wenV)}$	Delay time, output lower-byte enable and command latch enable gpmc_be0n_cle high to output write enable gpmc_wen valid	C[4] - 0.2	C[4] + 2.0	C[4] - 0.2	C[4] + 2.0	ns
GNF3	$t_{w(wenV-dV)}$	Delay time, output data gpmc_ad[15:0] valid to output write enable gpmc_wen valid	D[5] - 0.2	D[5] + 2.8	D[5] - 0.2	D[5] + 2.0	ns
GNF4	$t_{w(wenIV-dIV)}$	Delay time, output write enable gpmc_wen invalid to output data gpmc_ad[15:0] invalid	E[6] - 0.2	E[6] + 2.8	E[6] - 0.2	E[6] + 2.0	ns
GNF5	$t_{w(wenIV-cleIV)}$	Delay time, output write enable gpmc_wen invalid to output lower-byte enable and command latch enable gpmc_be0n_cle invalid	F[7] - 0.2	F[7] + 2.0	F[7] - 0.2	F[7] + 2.0	ns
GNF6	$t_{w(wenIV-csnIV)}$	Delay time, output write enable gpmc_wen invalid to output chip select gpmc_csn[x][2] invalid	G[8] - 0.2	G[8] + 2.0	G[8] - 0.2	G[8] + 2.0	ns
GNF7	$t_{w(aleH-wenV)}$	Delay time, output address valid and address latch enable gpmc_advn_ale high to output write enable gpmc_wen valid	C[4] - 0.2	C[4] + 2.0	C[4] - 0.2	C[4] + 2.0	ns
GNF8	$t_{w(wenIV-aleIV)}$	Delay time, output write enable gpmc_wen invalid to output address valid and address latch enable gpmc_advn_ale invalid	F[7] - 0.2	F[7] + 2.0	F[7] - 0.2	F[7] + 2.0	ns
GNF9	$t_{c(wen)}$	Cycle time, write		H[9]		H[9]	ns
GNF10	$t_{d(csnV-oenV)}$	Delay time, output chip select gpmc_csn[x][2] valid to output enable gpmc_oen valid	I[10] - 0.2	I[10] + 2.0	I[10] - 0.2	I[10] + 2.0	ns
GNF13	$t_{w(oenV)}$	Pulse duration, output enable gpmc_oen valid		K[11]		K[11]	ns
GNF14	$t_{c(oen)}$	Cycle time, read	L[12]		L[12]		ns
GNF15	$t_{w(oenIV-csnIV)}$	Delay time, output enable gpmc_oen invalid to output chip select gpmc_csn[x][2] invalid	M[13] - 0.2	M[13] + 2.0	M[13] - 0.2	M[13] + 2.0	ns

(1) A = (WEOffTime - WEOnTime) × (TimeParaGranularity + 1) × GPMC_FCLK[14]
(2) In gpmc_csn[x], x is equal to 0, 1, 2, 3, 4, 5, or 6.
(3) B = ((WEOnTime - CSOnTime) × (TimeParaGranularity + 1) + 0.5 × (WEExtraDelay - CSExtraDelay)) × GPMC_FCLK[14]
(4) C = ((WEOnTime - ADVOnTime) × (TimeParaGranularity + 1) + 0.5 × (WEExtraDelay - ADVExtraDelay)) × GPMC_FCLK[14]
(5) D = (WEOnTime × (TimeParaGranularity + 1) + 0.5 × WEExtraDelay) × GPMC_FCLK[14]
(6) E = ((WrCycleTime - WEOffTime) × (TimeParaGranularity + 1) - 0.5 × WEExtraDelay) × GPMC_FCLK[14]
(7) F = ((ADVWrOffTime - WEOffTime) × (TimeParaGranularity + 1) + 0.5 × (ADVExtraDelay - WEExtraDelay)) × GPMC_FCLK[14]
(8) G = ((CSWrOffTime - WEOffTime) × (TimeParaGranularity + 1) + 0.5 × (CSExtraDelay - WEExtraDelay)) × GPMC_FCLK[14]
(9) H = WrCycleTime × (1 + TimeParaGranularity) × GPMC_FCLK[14]
(10) I = ((OEOnTime - CSOnTime) × (TimeParaGranularity + 1) + 0.5 × (OEExtraDelay - CSExtraDelay)) × GPMC_FCLK[14]
(11) K = (OEOffTime - OEOnTime) × (1 + TimeParaGranularity) × GPMC_FCLK[14]
(12) L = RdCycleTime × (1 + TimeParaGranularity) × GPMC_FCLK[14]
(13) M = ((CSRdOffTime - OEOffTime) × (TimeParaGranularity + 1) + 0.5 × (CSExtraDelay - OEExtraDelay)) × GPMC_FCLK[14]
(14) GPMC_FCLK is general-purpose memory controller internal functional clock period in ns.

Copyright © 2014–2019, Texas Instruments Incorporated

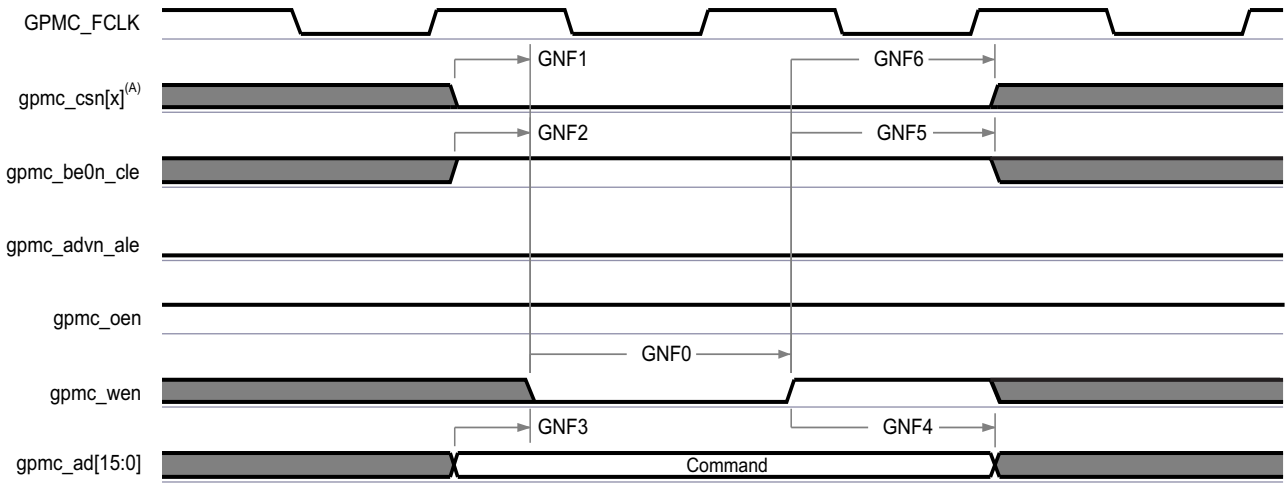

A. In gpmc_csn[x], x is equal to 0, 1, 2, 3, 4, 5, or 6.

Figure 5-44. GPMC and NAND Flash—Command Latch Cycle

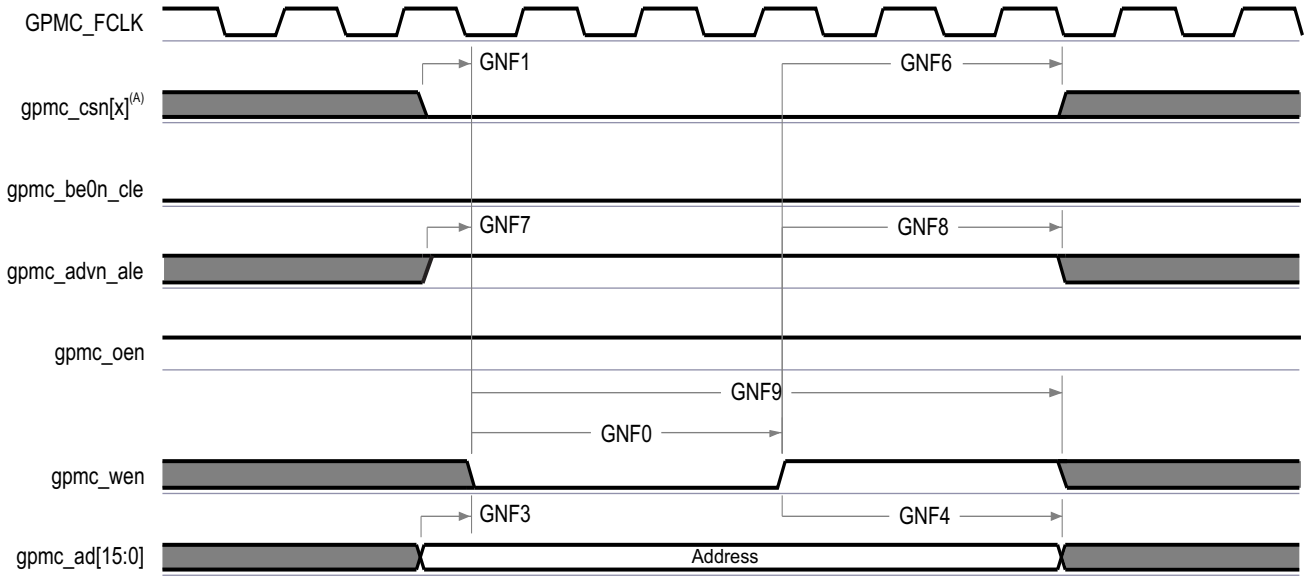

A. In gpmc_csn[x], x is equal to 0, 1, 2, 3, 4, 5, or 6.

Figure 5-45. GPMC and NAND Flash—Address Latch Cycle

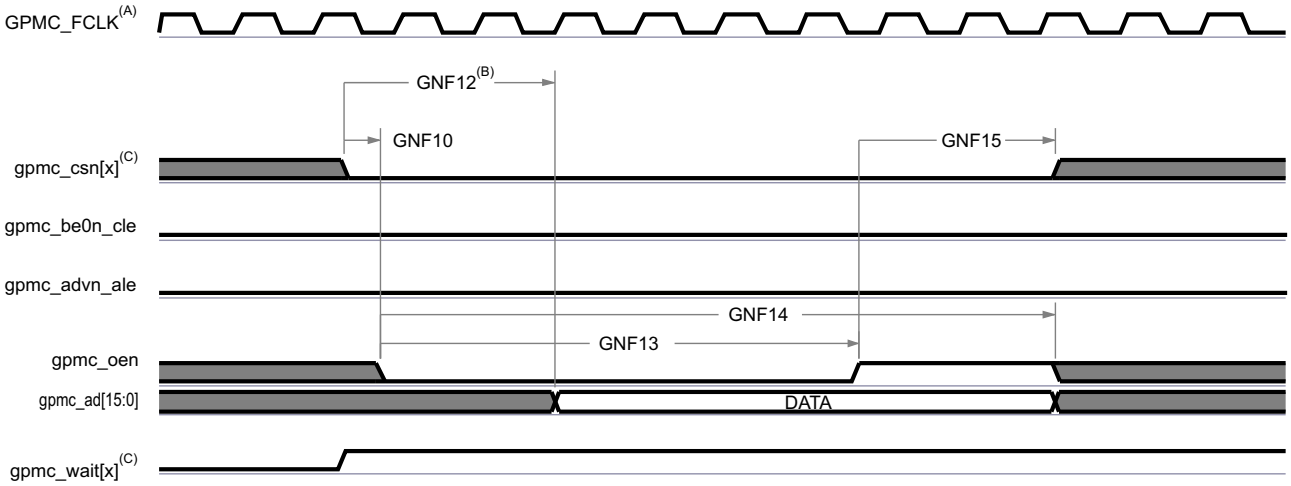

A. GPMC_FCLK is an internal clock (GPMC functional clock) not provided externally.
B. GNF12 parameter illustrates amount of time required to internally sample input data. It is expressed in number of GPMC functional clock cycles. From start of read cycle and after GNF12 functional clock cycles, input data will be internally sampled by active functional clock edge. GNF12 value must be stored inside AccessTime register bits field.
C. In gpmc_csn[x], x is equal to 0, 1, 2, 3, 4, 5, or 6. In gpmc_wait[x], x is equal to 0 or 1.

Figure 5-46. GPMC and NAND Flash—Data Read Cycle

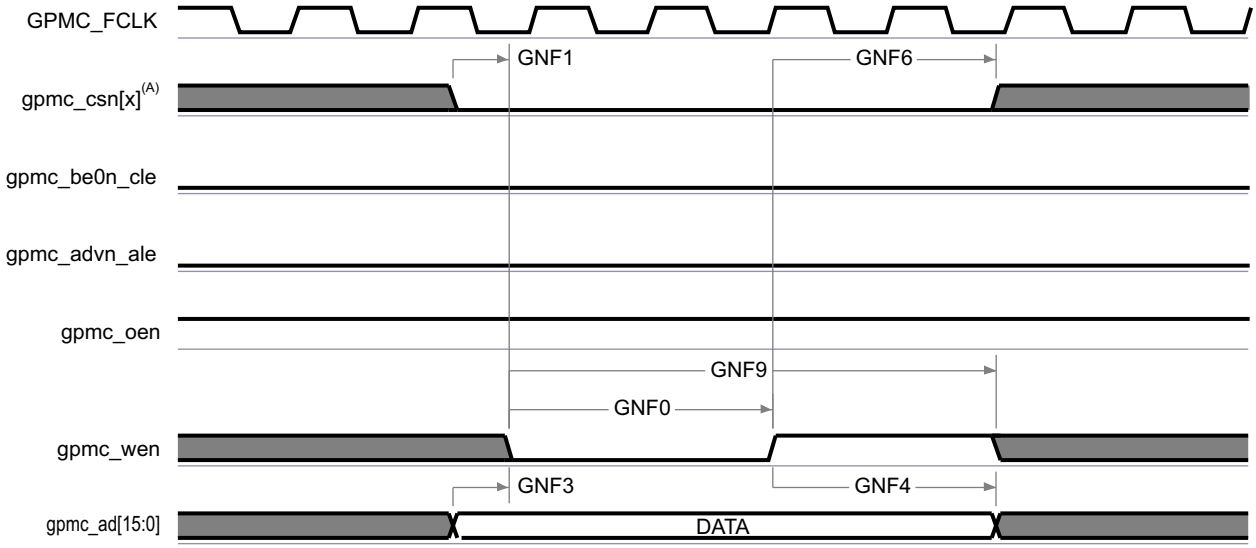

A. In gpmc_csn[x], x is equal to 0, 1, 2, 3, 4, 5, or 6.

Figure 5-47. GPMC and NAND Flash—Data Write Cycle

Copyright © 2014–2019, Texas Instruments Incorporated

5.12.8.2 Memory Interface

The device has a dedicated interface to LPDDR2, DDR3, and DDR3L SDRAM. It supports JEDEC standard compliant LPDDR2, DDR3, and DDR3L SDRAM devices with a 16- or 32-bit data path to external SDRAM memory.

For more details on the LPDDR2, DDR3, and DDR3L memory interface, see the EMIF section of the *AM437x Sitara Processors Technical Reference Manual*.

5.12.8.2.1 DDR3 and DDR3L Routing Guidelines

This section provides the timing specification for the DDR3 and DDR3L interface as a PCB design and manufacturing specification. The design rules constrain PCB trace length, PCB trace skew, signal integrity, cross-talk, and signal timing. These rules, when followed, result in a reliable DDR3 or DDR3L memory system without the need for a complex timing closure process. For more information regarding the guidelines, see *Understanding TI's PCB Routing Rule-Based DDR Timing Specification*. This application report provides generic guidelines and approach. All the specifications provided in the data manual take precedence over the generic guidelines and must be adhered to for a reliable DDR3 or DDR3L interface operation.

NOTE

All references to DDR3 in this section apply to DDR3 and DDR3L devices, unless otherwise noted.

5.12.8.2.1.1 Board Designs

TI only supports board designs using DDR3 memory that follow the guidelines in this document. The switching characteristics and timing diagram for the DDR3 memory interface are shown in Table 5-48 and Figure 5-48.

Table 5-48. Switching Characteristics for DDR3 Memory Interface

NO.	PARAMETER		MIN	MAX	UNIT
1	$t_{c(DDR_CK)}$ $t_{c(DDR_CKn)}$	Cycle time, DDR_CK and DDR_CKn	2.5	3.3[(1)]	ns

(1) The JEDEC JESD79-3F Standard defines the maximum clock period of 3.3 ns for all standard-speed bin DDR3 and DDR3L memory devices. Therefore, all standard-speed bin DDR3 and DDR3L memory devices are required to operate at 303 MHz.

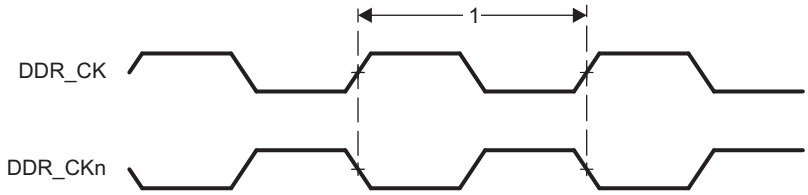

Figure 5-48. DDR3 Memory Interface Clock Timing

5.12.8.2.1.2 DDR3 Device Combinations

Because there are several possible combinations of device counts and single-side or dual-side mounting, Table 5-49 summarizes the supported device configurations.

Table 5-49. Supported DDR3 Device Combinations

NUMBER OF DDR3 DEVICES	DDR3 DEVICE WIDTH (BITS)	MIRRORED?	DDR3 EMIF WIDTH (BITS)
1	16	N	16
2	8	Y (1)	16
2	16	Y (1)	32
4	8	Y (1)	32

(1) DDR3 devices are mirrored when half of the devices are placed on the top of the board and the other half are placed on the bottom of the board.

5.12.8.2.1.3 DDR3 Interface

5.12.8.2.1.3.1 DDR3 Interface Schematic

The DDR3 interface schematic varies, depending upon the width of the DDR3 devices used.

Figure 5-49 shows the schematic connections for 16-bit interface using one x16 DDR3 device. Figure 5-50 shows the schematic connections for 16-bit interface without using V_{TT} termination for the ADDR_CTRL net class signals. Figure 5-51 shows the schematic connections for 16-bit interface using two x8 DDR3 devices.

Figure 5-52 shows the schematic connections for 32-bit interface using two x16 DDR3 device and Figure 5-53 shows the schematic connections for 32-bit interface using four x8 DDR3 devices.

When not using all or part of a DDR3 interface, the proper method of handling the unused pins is to tie off the DDR_DQS[x] pins to the VDDS_DDR supply via a 1-kΩ resistor and pulling the DDR_DQSn[x] pins to ground via a 1k-Ω resistor. This must be done for each byte not used. Although these signals have internal pullup and pulldown, external pullup and pulldown provide additional protection against external electrical noise causing activity on the signals. Also, include the 49.9-Ω pulldown for DDR_VTP. The VDDS_DDR and DDR_VREF power supply terminals need to be connected to their respective power supplies even if the DDR3 interface is not being used. All other DDR3 interface pins can be left unconnected. The supported modes for use of the DDR3 EMIF are 32 bits wide, 16 bits wide, or not used.

The device can only source one load connected to the DQS[x] and DQ[x] net class signals and up to four loads connected to the CK and ADDR_CTRL net class signals. For more information related to net classes, see Section 5.12.8.2.1.3.9.

Copyright © 2014–2019, Texas Instruments Incorporated

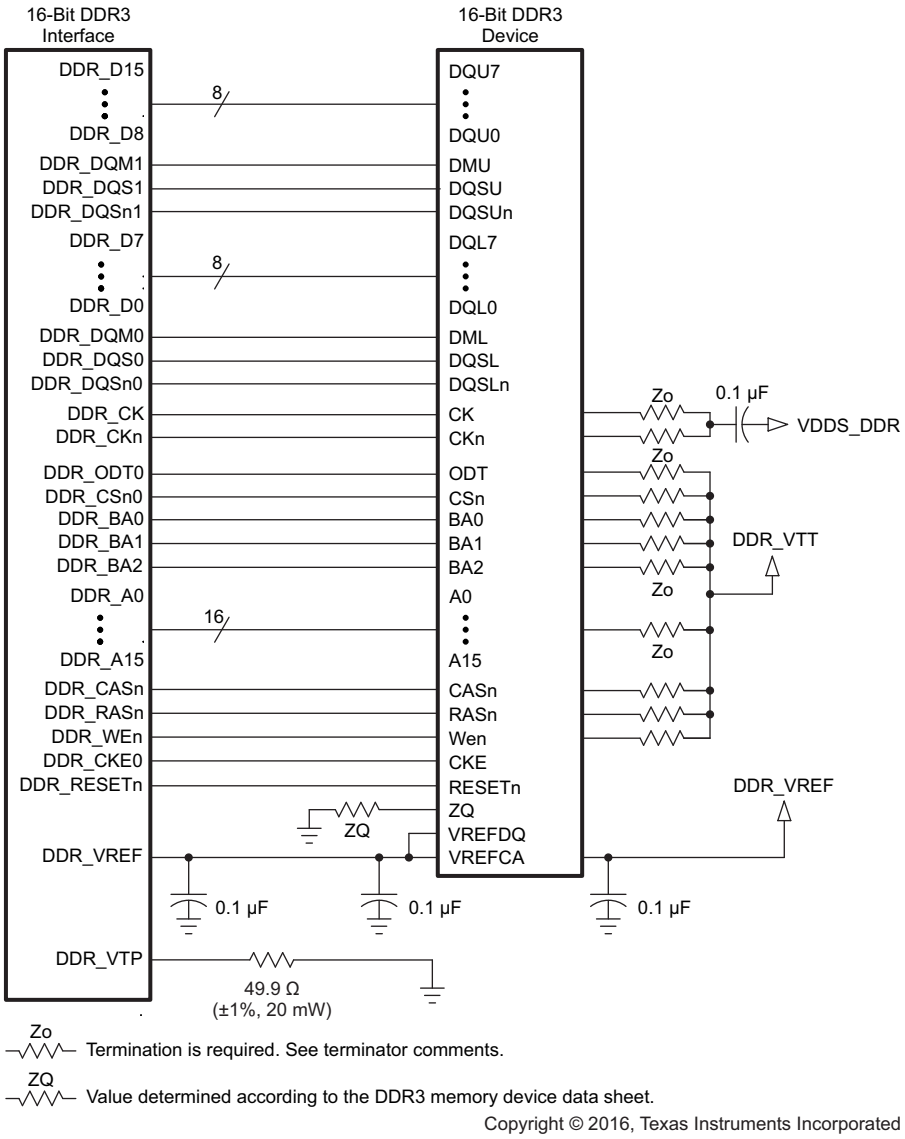

Figure 5-49. 16-Bit DDR3 Interface Using One 16-Bit DDR3 Device With V_{TT} Termination

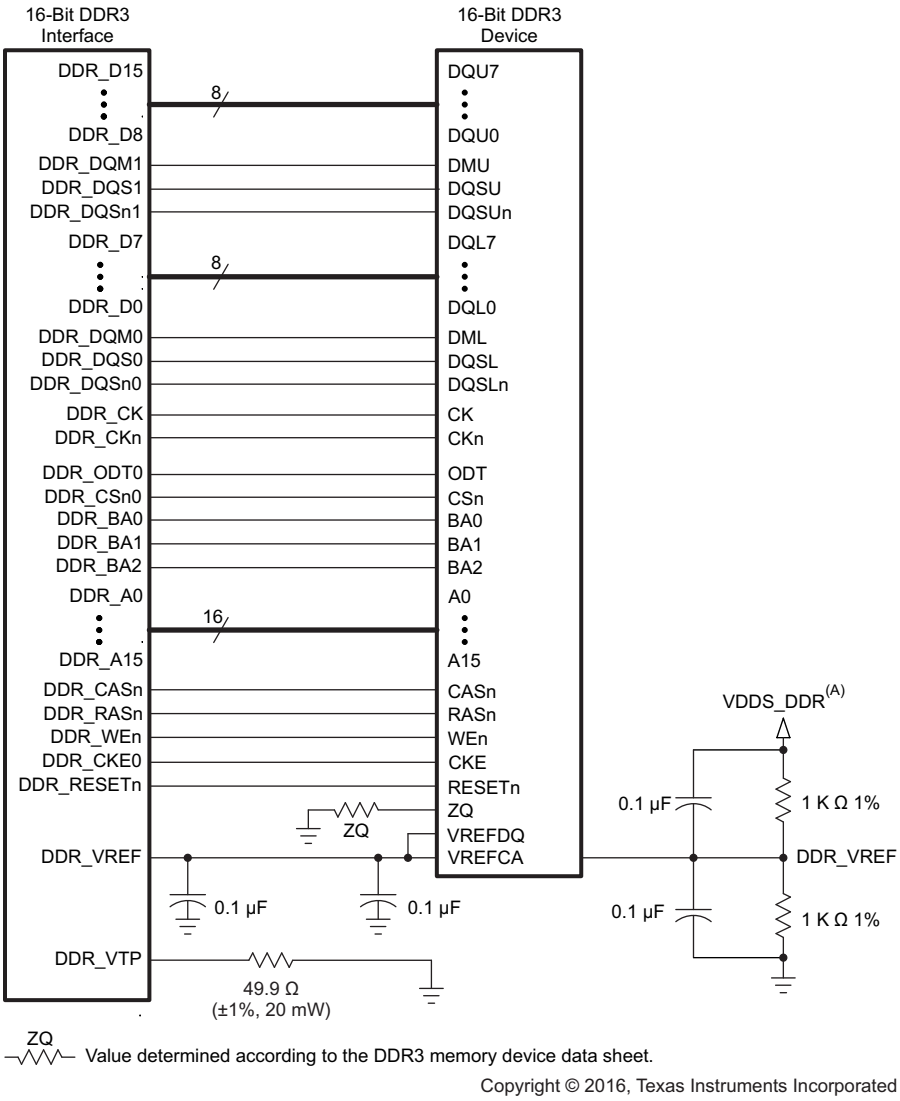

Copyright © 2016, Texas Instruments Incorporated

A. VDDS_DDR is the power supply for the DDR3 memories and the DDR3 interface.

Figure 5-50. 16-Bit DDR3 Interface Using One 16-Bit DDR3 Device Without V_{TT} Termination

Copyright © 2014–2019, Texas Instruments Incorporated

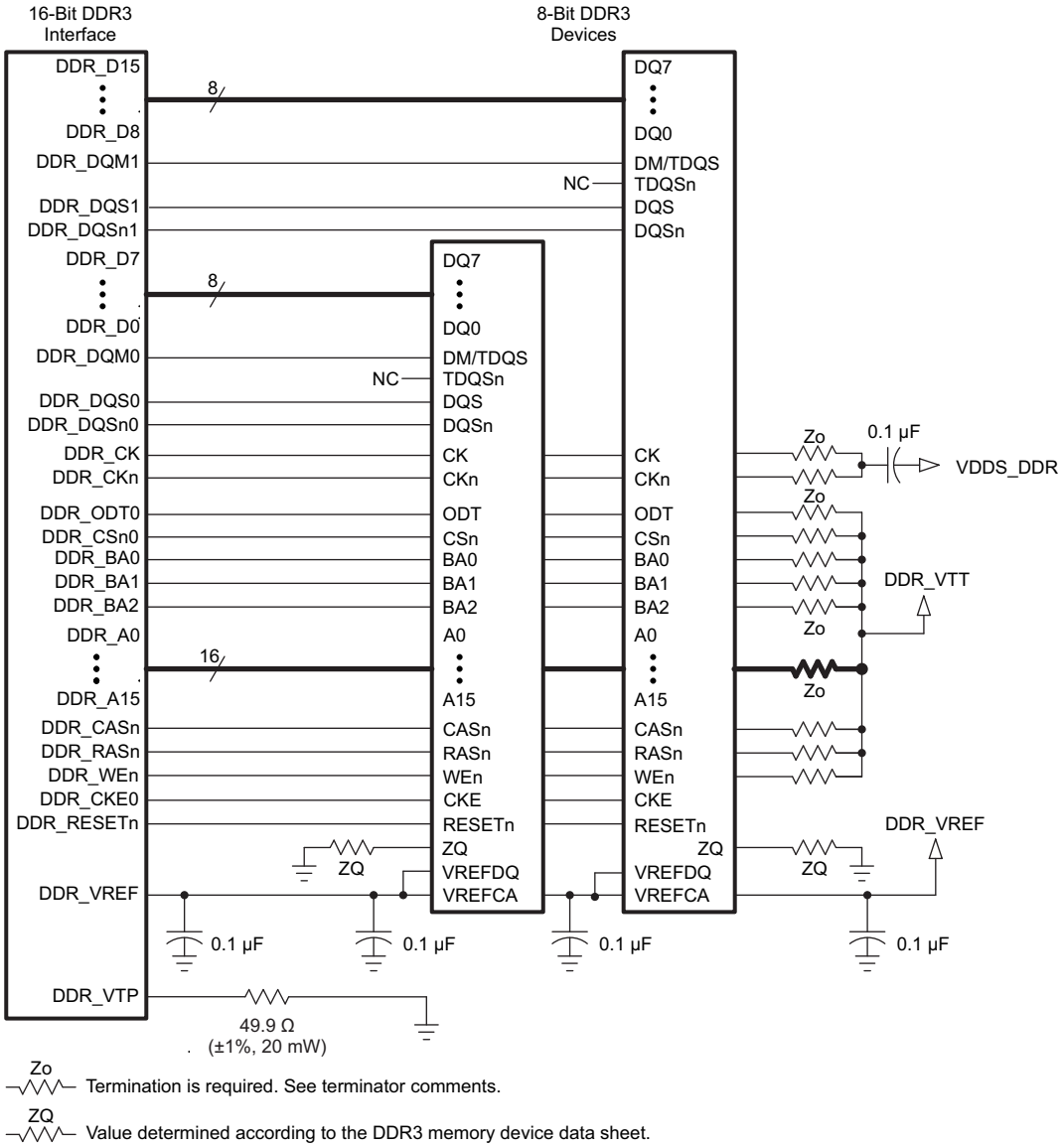

Figure 5-51. 16-Bit DDR3 Interface Using Two 8-Bit DDR3 Devices With V_{TT} Termination

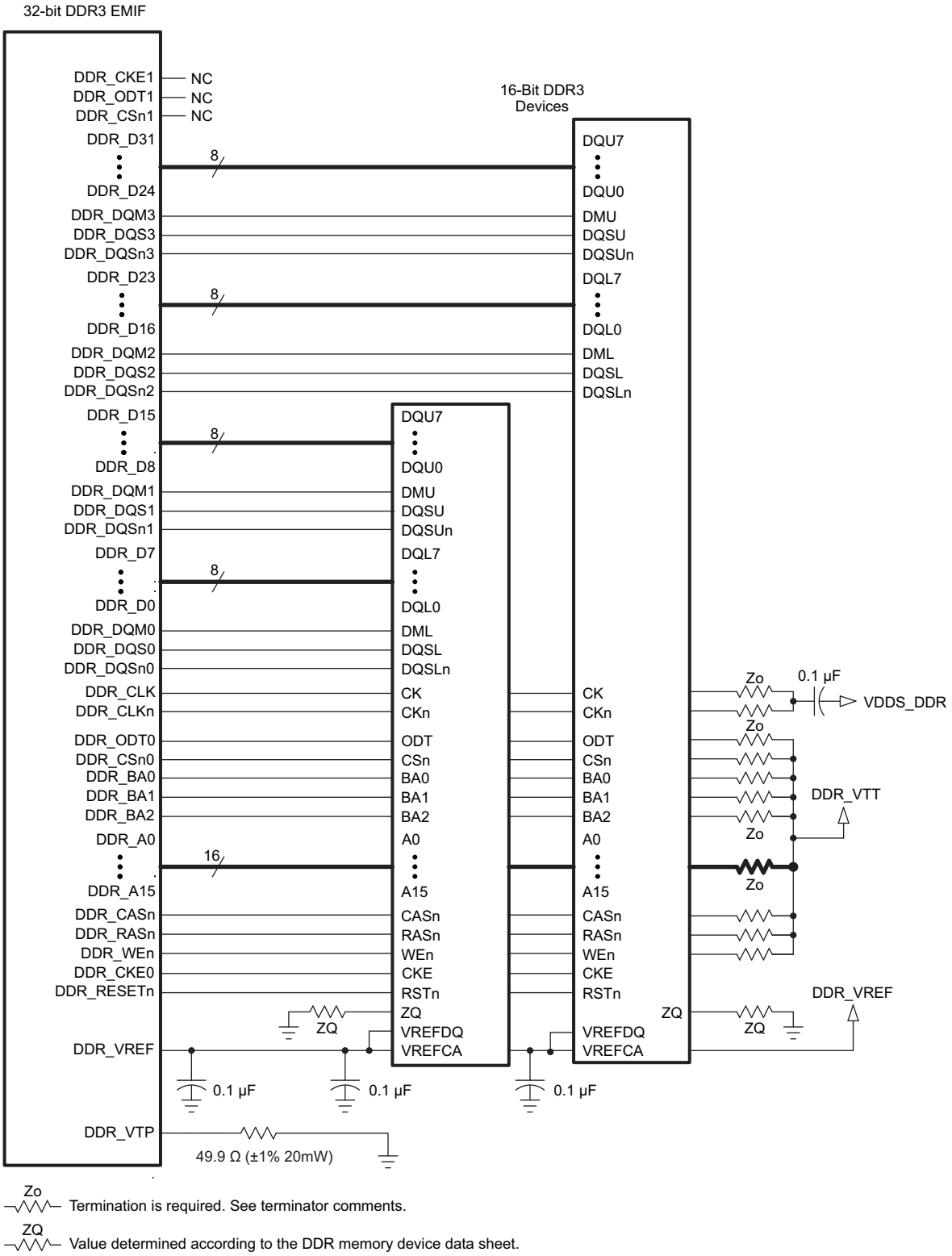

Figure 5-52. 32-Bit DDR3 Interface Using Two 16-Bit DDR3 Devices With V_{TT} Termination

Copyright © 2014–2019, Texas Instruments Incorporated

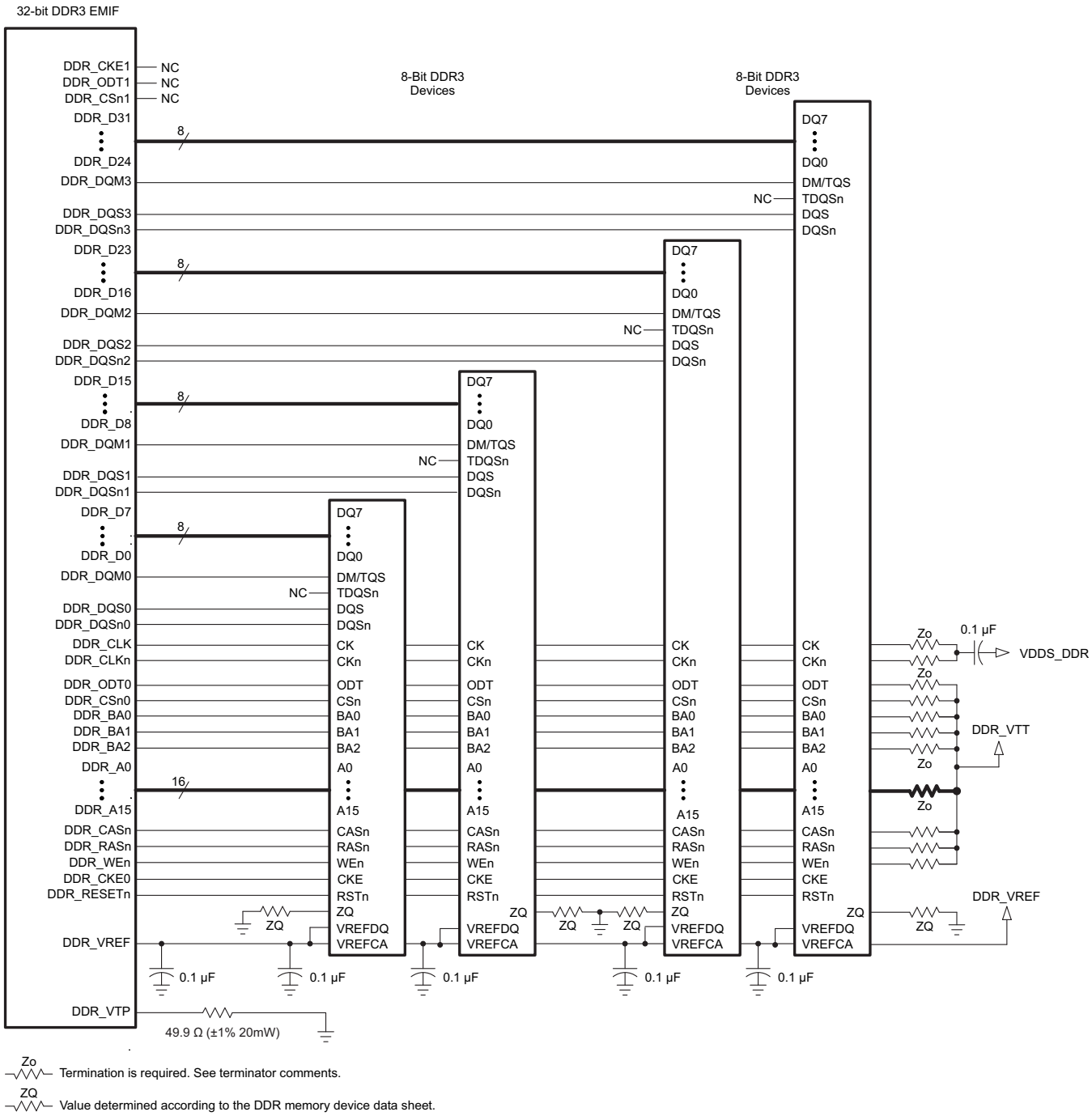

Figure 5-53. 32-Bit DDR3 Interface Using Four 8-Bit DDR3 Devices With V_{TT} Termination

5.12.8.2.1.3.2 Compatible JEDEC DDR3 Devices

Table 5-50 shows the parameters of the JEDEC DDR3 devices that are compatible with this interface.

Table 5-50. Compatible JEDEC DDR3 Devices (Per Interface)

NO.	PARAMETER	CONDITION	MIN	MAX	UNIT
1	JEDEC DDR3 device speed grade	$t_{C(DDR_CK)}$ and $t_{C(DDR_CKn)}$ = 2.5ns	DDR3-1600		
2	JEDEC DDR3 device bit width		x8	x32	
3	JEDEC DDR3 device count(1)		1	4	Devices

(1) For valid DDR3 device configurations and device counts, see Section 5.12.8.2.1.3.1, Figure 5-49, and Figure 5-51.

5.12.8.2.1.3.3 DDR3 PCB Stackup

The minimum stackup for routing the DDR3 interface is a four-layer stack up as shown in Table 5-51. Additional layers may be added to the PCB stackup to accommodate other circuitry, enhance signal integrity and electromagnetic interference performance, or to reduce the size of the PCB footprint.

Table 5-51. Minimum PCB Stackup(1)

LAYER	TYPE	DESCRIPTION
1	Signal	Top signal routing
2	Plane	Ground
3	Plane	Split Power Plane
4	Signal	Bottom signal routing

(1) All signals that have critical signal integrity requirements should be routed first on layer 1. It may not be possible to route all of these signals on layer 1 which requires some to be routed on layer 4. When this is done, the signal routes on layer 4 should not cross splits in the power plane.

Table 5-52. PCB Stackup Specifications(1)

NO.	PARAMETER	MIN	TYP	MAX	UNIT
1	PCB routing and plane layers	4			
2	Signal routing layers	2			
3	Full ground reference layers under DDR3 routing region(2)	1			
4	Full VDDS_DDR power reference layers under the DDR3 routing region(2)	1			
5	Number of reference plane cuts allowed within DDR3 routing region(3)			0	
6	Number of layers between DDR3 routing layer and reference plane(4)			0	
7	PCB routing feature size		4		mils
8	PCB trace width, w		4		mils
9	PCB BGA escape via pad size(5)		18	20	mils
10	PCB BGA escape via hole size		10		mils
13	Single-ended impedance, Zo(6)		50	75	Ω
14	Impedance control(7)(8)	Zo-5	Zo	Zo+5	Ω

(1) For the DDR3 device BGA pad size, see the DDR3 device manufacturer documentation.

(2) Ground reference layers are preferred over power reference layers. Be sure to include bypass caps to accommodate reference layer return current as the trace routes switch routing layers.

(3) No traces should cross reference plane cuts within the DDR3 routing region. High-speed signal traces crossing reference plane cuts create large return current paths which can lead to excessive crosstalk and EMI radiation.

(4) Reference planes are to be directly adjacent to the signal plane to minimize the size of the return current loop.

(5) An 18-mil pad assumes Via Channel is the most economical BGA escape. A 20-mil pad may be used if additional layers are available for power routing. An 18-mil pad is required for minimum layer count escape.

(6) Zo is the nominal singled-ended impedance selected for the PCB.

(7) This parameter specifies the AC characteristic impedance tolerance for each segment of a PCB signal trace relative to the chosen Zo defined by the single-ended impedance parameter.

(8) Tighter impedance control is required to ensure flight time skew is minimal.

Copyright © 2014–2019, Texas Instruments Incorporated

5.12.8.2.1.3.4 DDR3 Placement

Figure 5-54 shows the required placement for the device as well as the DDR3 devices. The dimensions for this figure are defined in Table 5-53. The placement does not restrict the side of the PCB on which the devices are mounted. The ultimate purpose of the placement is to limit the maximum trace lengths and allow for proper routing space.

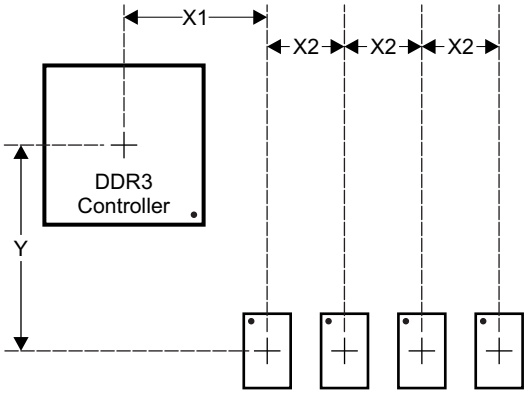

Figure 5-54. Placement Specifications

Table 5-53. Placement Specifications[(1)]

NO.	PARAMETER	MIN	MAX	UNIT
1	X1[(2)(3)(4)]		1000	mils
2	X2[(2)(3)]		600	mils
3	Y Offset[(2)(3)(4)]		1500	mils
4	Clearance from non-DDR3 signal to DDR3 keepout region[(5)(6)]	4		w

(1) DDR3 keepout region to encompass entire DDR3 routing area.
(2) For dimension definitions, see Figure 5-54.
(3) Measurements from center of device to center of DDR3 device.
(4) Minimizing X1 and Y improves timing margins.
(5) w is defined as the signal trace width.
(6) Non-DDR3 signals allowed within DDR3 keepout region provided they are separated from DDR3 routing layers by a ground plane.

5.12.8.2.1.3.5 DDR3 Keepout Region

The region of the PCB used for DDR3 circuitry must be isolated from other signals. The DDR3 keepout region is defined for this purpose and is shown in Figure 5-55. This region should encompass all DDR3 circuitry and the region size varies with component placement and DDR3 routing. Additional clearances required for the keepout region are shown in Table 5-53. Non-DDR3 signals should not be routed on the same signal layer as DDR3 signals within the DDR3 keepout region. Non-DDR3 signals may be routed in the region provided they are routed on layers separated from DDR3 signal layers by a ground layer. No breaks should be allowed in the reference ground or VDDS_DDR power plane in this region. In addition, the VDDS_DDR power plane should cover the entire keepout region.

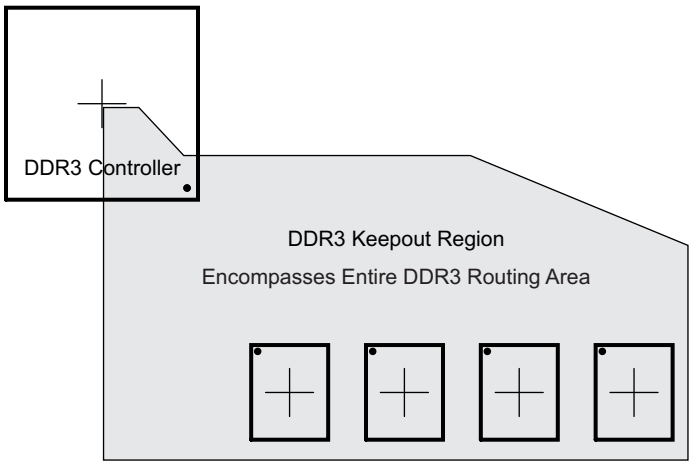

Figure 5-55. DDR3 Keepout Region

5.12.8.2.1.3.6 DDR3 Bulk Bypass Capacitors

Bulk bypass capacitors are required for moderate speed bypassing of the DDR3 and other circuitry. Table 5-54 contains the minimum numbers and capacitance required for the bulk bypass capacitors. Note that this table only covers the bypass needs of the DDR3 interface and DDR3 devices. Additional bulk bypass capacitance may be needed for other circuitry.

Table 5-54. Bulk Bypass Capacitors[(1)]

NO.	PARAMETER	MIN	MAX	UNIT
1	VDDS_DDR bulk bypass capacitor count	2		Devices
2	VDDS_DDR bulk bypass total capacitance	20		µF
3	DDR3#1 bulk bypass capacitor count	2		Devices
4	DDR3#1 bulk bypass total capacitance	20		µF
5	DDR3#2 bulk bypass capacitor count[(2)]	2		Devices
6	DDR3#2 bulk bypass total capacitance[(2)]	20		µF
7	DDR3#3 bulk bypass capacitor count[(3)]	2		Devices
8	DDR3#3 bulk bypass total capacitance[(3)]	20		µF
9	DDR3#4bulk bypass capacitor count[(3)]	2		Devices
10	DDR3#4 bulk bypass total capacitance[(3)]	20		µF

(1) These devices should be placed near the devices they are bypassing, but preference should be given to the placement of the high-speed (HS) bypass capacitors and DDR3 signal routing.

(2) Only used when two DDR3 devices are used.

(3) Only used when four DDR3 devices are used.

Copyright © 2014–2019, Texas Instruments Incorporated

5.12.8.2.1.3.7 DDR3 High-Speed Bypass Capacitors

High-speed (HS) bypass capacitors are critical for proper DDR3 interface operation. It is particularly important to minimize the parasitic series inductance of the HS bypass capacitors, device DDR3 power, and device DDR3 ground connections. Table 5-55 contains the specification for the HS bypass capacitors as well as for the power connections on the PCB. Generally speaking, it is good to:

1. Fit as many HS bypass capacitors as possible.
2. Minimize the distance from the bypass cap to the power terminals being bypassed.
3. Use the smallest physical sized capacitors possible with the highest capacitance readily available.
4. Connect the bypass capacitor pads to their vias using the widest traces possible and using the largest hole size via possible.
5. Minimize via sharing. Note the limites on via sharing shown in Table 5-55.

Table 5-55. High-Speed Bypass Capacitors

NO.	PARAMETER	MIN	TYP	MAX	UNIT
1	HS bypass capacitor package size(1)		0201	0402	10 mils
2	Distance, HS bypass capacitor to VDDS_DDR and VSS terminal being bypassed(2)(3)(4)			400	mils
3	VDDS_DDR HS bypass capacitor count	20			Devices
4	VDDS_DDR HS bypass capacitor total capacitance	1			µF
5	Trace length from VDDS_DDR and VSS terminal to connection via(2)		35	70	mils
6	Distance, HS bypass capacitor to DDR3 device being bypassed(5)			150	mils
7	DDR3 device HS bypass capacitor count(6)	12			Devices
8	DDR3 device HS bypass capacitor total capacitance(6)	0.85			µF
9	Number of connection vias for each HS bypass capacitor(7)(8)	2			Vias
10	Trace length from bypass capacitor connect to connection via(2)(8)		35	100	mils
11	Number of connection vias for each DDR3 device power and ground terminal(9)	1			Vias
12	Trace length from DDR3 device power and ground terminal to connection via(2)(7)		35	60	mils

(1) LxW, 10-mil units; for example, a 0402 is a 40x20-mil surface-mount capacitor.
(2) Closer and shorter is better.
(3) Measured from the nearest VDDS_DDR and ground terminal to the center of the capacitor package.
(4) Three of these capacitors should be underneath the device, between the cluster of VDDS_DDR and ground terminals, between the DDR3 interfaces on the package.
(5) Measured from the DDR3 device power and ground terminal to the center of the capacitor package.
(6) Per DDR3 device.
(7) An additional HS bypass capacitor can share the connection vias only if it is mounted on the opposite side of the board. No sharing of vias is permitted on the same side of the board.
(8) An HS bypass capacitor may share a via with a DDR3 device mounted on the same side of the PCB. A wide trace should be used for the connection and the length from the capacitor pad to the DDR3 device pad should be less than 150 mils.
(9) Up to two pairs of DDR3 power and ground terminals may share a via.

5.12.8.2.1.3.8 Return Current Bypass Capacitors

Use additional bypass capacitors if the return current reference plane changes due to DDR3 signals hopping from one signal layer to another. The bypass capacitor here provides a path for the return current to hop planes along with the signal. As many of these return current bypass capacitors should be used as possible. Because these are returns for signal current, the signal via size may be used for these capacitors.

5.12.8.2.1.3.9 DDR3 Net Classes

Table 5-56 lists the clock net classes for the DDR3 interface. Table 5-57 lists the signal net classes, and associated clock net classes, for signals in the DDR3 interface. These net classes are used for the termination and routing rules that follow.

Table 5-56. Clock Net Class Definitions

CLOCK NET CLASS	PIN NAMES
CK	DDR_CK and DDR_CKn
DQS0	DDR_DQS0 and DDR_DQSn0
DQS1	DDR_DQS1 and DDR_DQSn1
DQS2	DDR_DQS2 and DDR_DQSn2
DQS3	DDR_DQS3 and DDR_DQSn3

Table 5-57. Signal Net Class Definitions

SIGNAL NET CLASS	ASSOCIATED CLOCK NET CLASS	PIN NAMES
ADDR_CTRL	CK	DDR_BA[2:0], DDR_A[15:0], DDR_CSn0, DDR_CSn1, DDR_CASn, DDR_RASn, DDR_WEn, DDR_CKE0, DDR_CKE1, DDR_ODT0, DDR_ODT1
DQ0	DQS0	DDR_D[7:0], DDR_DQM0
DQ1	DQS1	DDR_D[15:8], DDR_DQM1
DQ2	DQS2	DDR_D[23:16], DDR_DQM2
DQ3	DQS3	DDR_D[31:24], DDR_DQM3

5.12.8.2.1.3.10 DDR3 Signal Termination

Signal terminations are required for the CK and ADDR_CTRL net class signals. On-device terminations (ODTs) are required on the DQS[x] and DQ[x] net class signals. Detailed termination specifications are covered in the routing rules in the following sections.

Figure 5-50 provides an example DDR3 schematic with one 16-bit DDR3 memory device that does not have V_{TT} termination on the address and control signals. A typical DDR3 point-to-point topology may provide acceptable signal integrity without V_{TT} termination. System performance should be verified by performing signal integrity analysis using specific PCB design details before implementing this topology.

5.12.8.2.1.3.11 DDR3 DDR_VREF Routing

DDR_VREF is used as a reference by the input buffers of the DDR3 memories as well as the device. DDR_VREF is intended to be half the DDR3 power supply voltage and is typically generated with a voltage divider connected to the VDDS_DDR power supply. It should be routed as a nominal 20-mil wide trace with 0.1 µF bypass capacitors near each device connection. Narrowing of DDR_VREF is allowed to accommodate routing congestion.

5.12.8.2.1.3.12 DDR3 VTT

Like DDR_VREF, the nominal value of the VTT supply is half the DDR3 supply voltage. Unlike DDR_VREF, VTT is expected to source and sink current, specifically the termination current for the ADDR_CTRL net class Thevinen terminators. VTT is needed at the end of the address bus and it should be routed as a power subplane. VTT should be bypassed near the terminator resistors.

Copyright © 2014–2019, Texas Instruments Incorporated

5.12.8.2.1.4 DDR3 CK and ADDR_CTRL Topologies and Routing Definition

The CK and ADDR_CTRL net classes are routed similarly and are length matched to minimize skew between them. CK is a bit more complicated because it runs at a higher transition rate and is differential. The following subsections show the topology and routing for various DDR3 configurations for CK and ADDR_CTRL. The figures in the following subsections define the terms for the routing specification detailed in Table 5-58.

5.12.8.2.1.4.1 Using Two DDR3 Devices (x8 or x16)

Two DDR3 devices are supported on the DDR3 interface consisting of two x8 DDR3 devices arranged as one 16-bit bank or two x16 DDR3 devices arranged as one 32-bit bank. These two devices may be mounted on one side of the PCB, or may be mirrored in a pair to save board space at a cost of increased routing complexity and parts on the backside of the PCB.

5.12.8.2.1.4.2 CK and ADDR_CTRL Topologies, Two DDR3 Devices

Figure 5-56 shows the topology of the CK net classes and Figure 5-57 shows the topology for the corresponding ADDR_CTRL net classes.

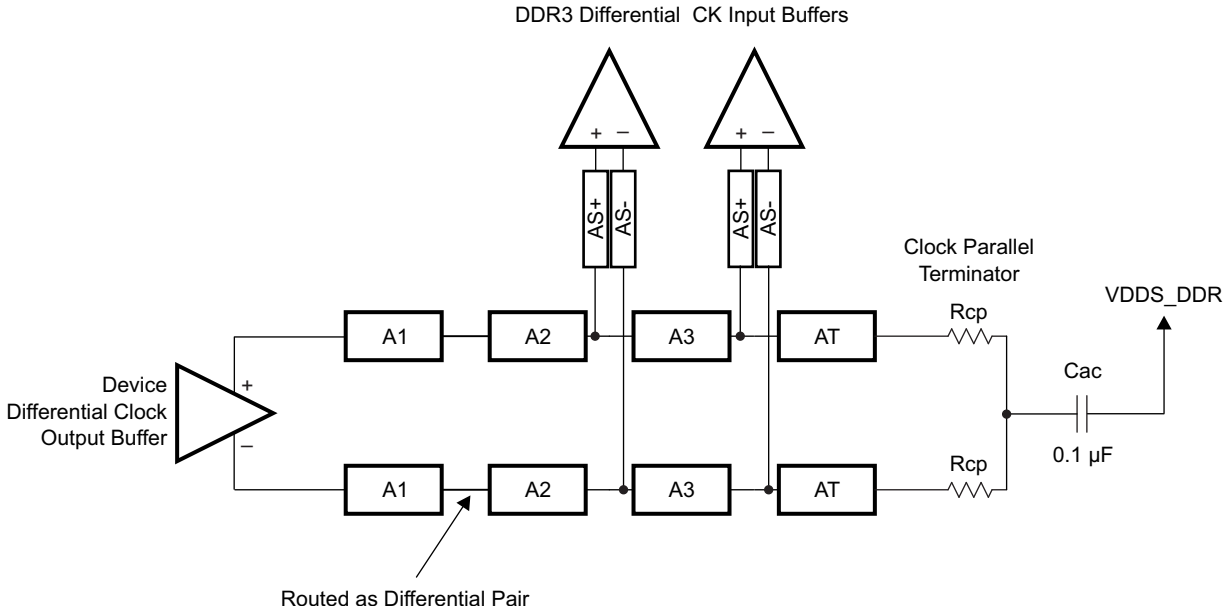

NOTE: For routing definitions, see Table 5-58, *CK and ADDR_CTRL Routing Specification*.

Figure 5-56. CK Topology for Two DDR3 Devices

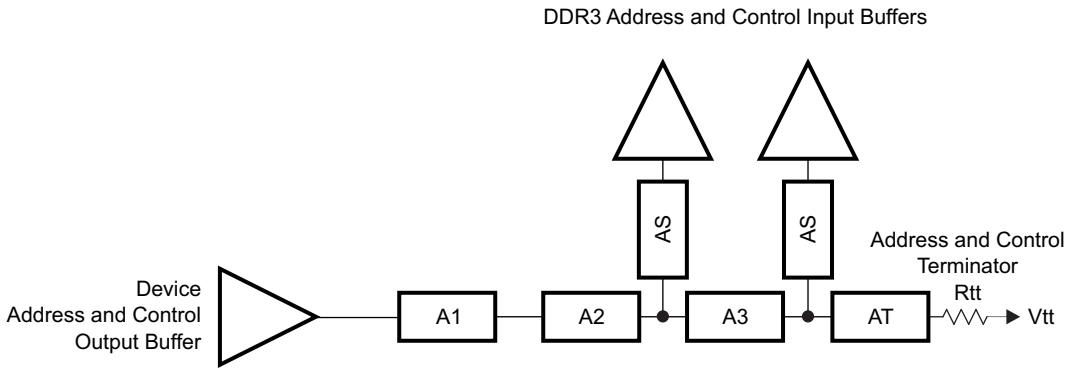

NOTE: For routing definitions, see Table 5-58, *CK and ADDR_CTRL Routing Specification*.

Figure 5-57. ADDR_CTRL Topology for Two DDR3 Devices

5.12.8.2.1.4.3 CK and ADDR_CTRL Routing, Two DDR3 Devices

Figure 5-58 shows the CK routing for two DDR3 devices placed on the same side of the PCB. Figure 5-59 shows the corresponding ADDR_CTRL routing.

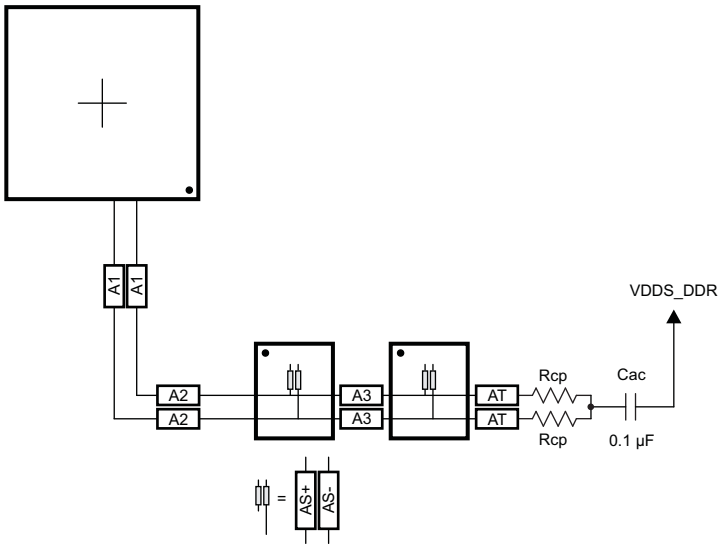

NOTE: For routing definitions, see Table 5-58, *CK and ADDR_CTRL Routing Specification*.

Figure 5-58. CK Routing for Two Single-Side DDR3 Devices

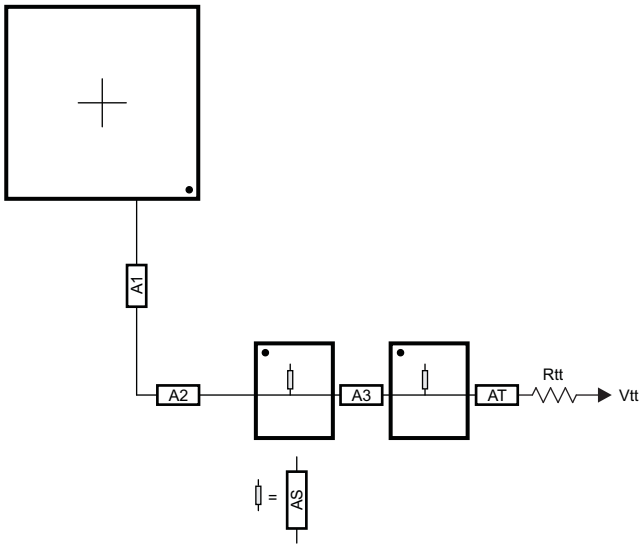

NOTE: For routing definitions, see Table 5-58, *CK and ADDR_CTRL Routing Specification*.

Figure 5-59. ADDR_CTRL Routing for Two Single-Side DDR3 Devices

Copyright © 2014–2019, Texas Instruments Incorporated

To save PCB space, the two DDR3 memories may be mounted as a mirrored pair at a cost of increased routing and assembly complexity. Figure 5-60 and Figure 5-61 show the routing for CK and ADDR_CTRL, respectively, for two DDR3 devices mirrored in a single-pair configuration.

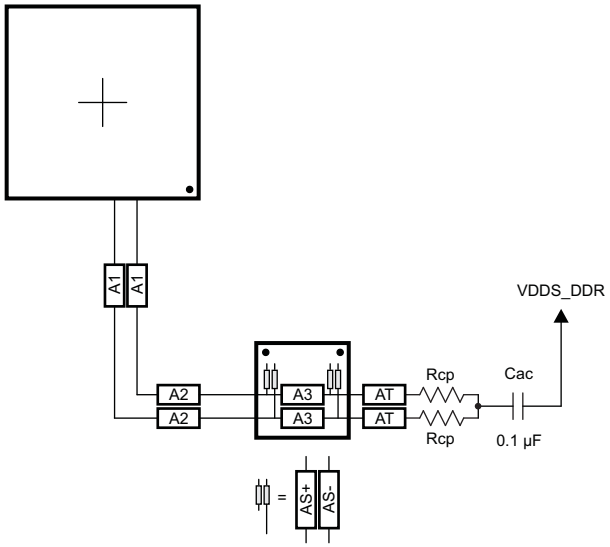

NOTE: For routing definitions, see Table 5-58, *CK and ADDR_CTRL Routing Specification*.

Figure 5-60. CK Routing for Two Mirrored DDR3 Devices

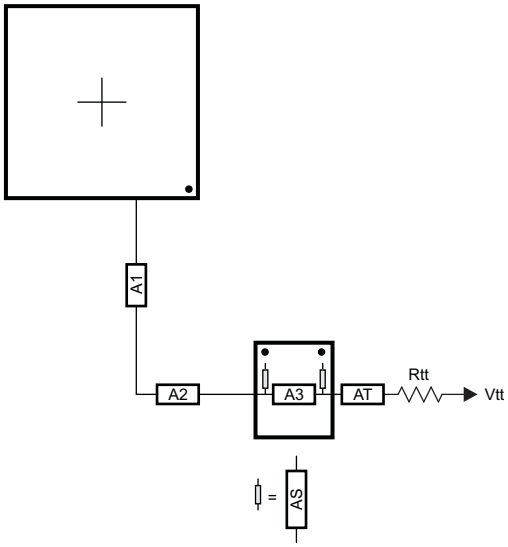

NOTE: For routing definitions, see Table 5-58, *CK and ADDR_CTRL Routing Specification*.

Figure 5-61. ADDR_CTRL Routing for Two Mirrored DDR3 Devices

5.12.8.2.1.4.4 Using Four 8-Bit DDR3 Devices

Two DDR3 devices are supported on the DDR3 interface consisting of four x8 DDR3 devices arranged as one 32-bit bank. These four devices may be mounted on one side of the PCB, or may be mirrored in pairs to save board space at a cost of increased routing complexity and parts on the backside of the PCB.

5.12.8.2.1.4.5 CK and ADDR_CTRL Topologies, Four DDR3 Devices

Figure 5-62 shows the topology of the CK net classes and Figure 5-63 shows the topology for the corresponding ADDR_CTRL net classes.

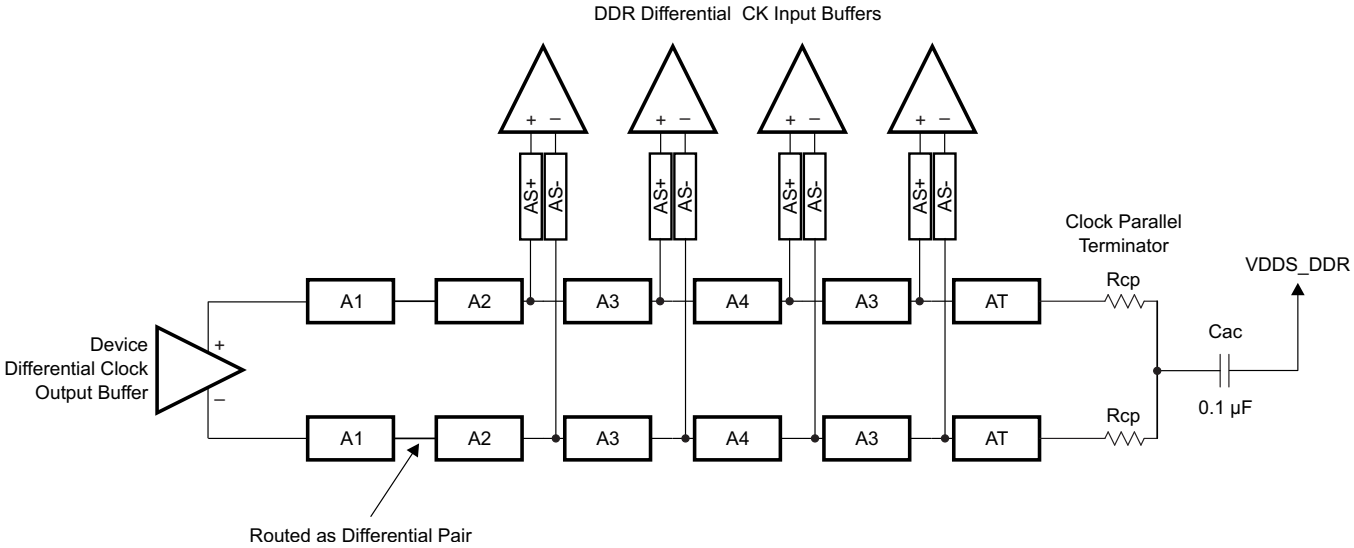

NOTE: For routing definitions, see Table 5-58, *CK and ADDR_CTRL Routing Specification*.

Figure 5-62. CK Topology for Four DDR3 Devices

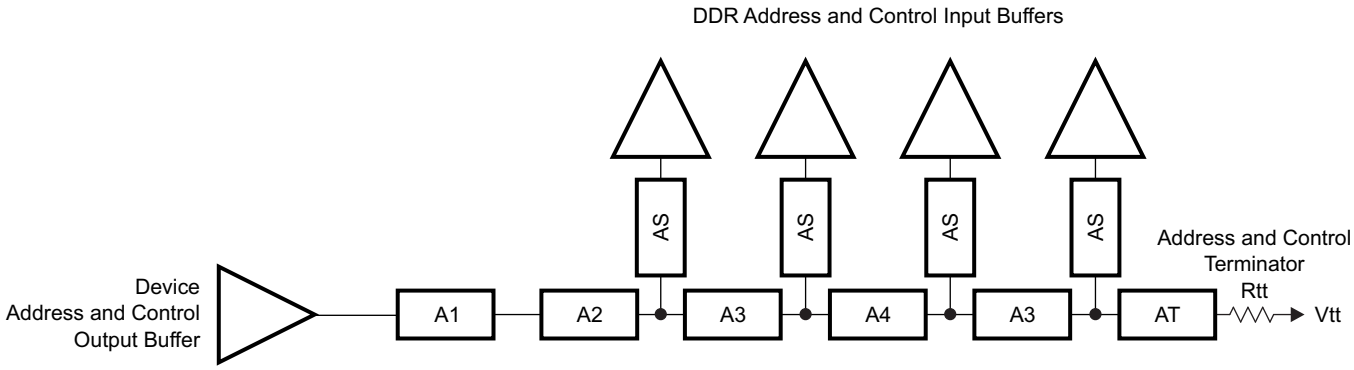

NOTE: For routing definitions, see Table 5-58, *CK and ADDR_CTRL Routing Specification*.

Figure 5-63. ADDR_CTRL Topology for Four DDR3 Devices

5.12.8.2.1.4.6 CK and ADDR_CTRL Routing, Four DDR3 Devices

Figure 5-64 shows the CK routing for four DDR3 devices placed on the same side of the PCB. Figure 5-65 shows the corresponding ADDR_CTRL routing.

Copyright © 2014–2019, Texas Instruments Incorporated

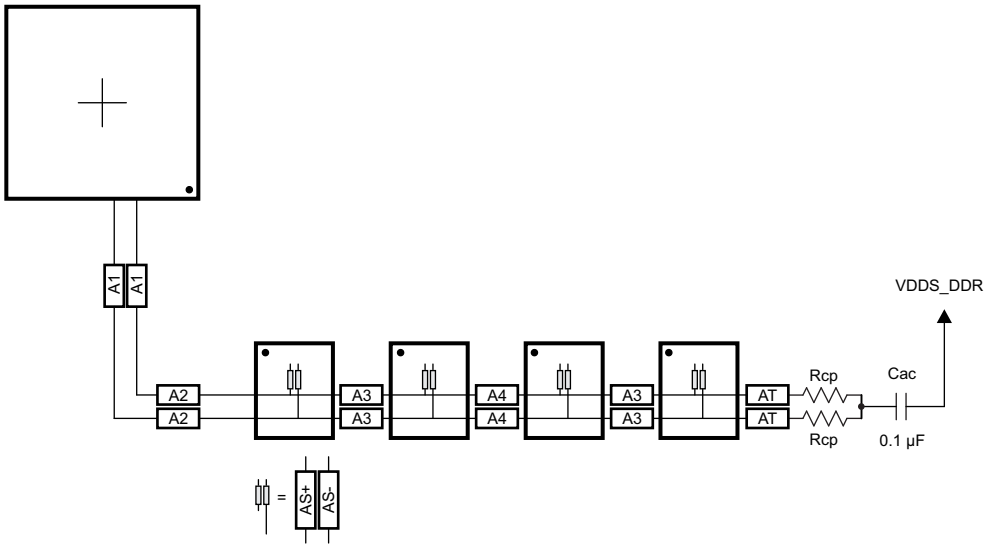

NOTE: For routing definitions, see Table 5-58, *CK and ADDR_CTRL Routing Specification*.

Figure 5-64. CK Routing for Four Single-Side DDR3 Devices

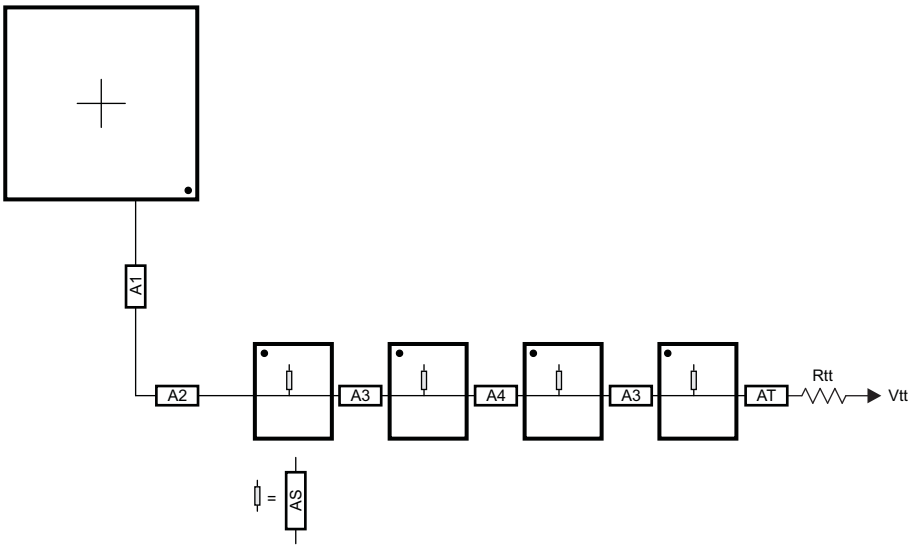

NOTE: For routing definitions, see Table 5-58, *CK and ADDR_CTRL Routing Specification*.

Figure 5-65. ADDR_CTRL Routing for Four Single-Side DDR3 Devices

To save PCB space, the four DDR3 memories may be mounted as a mirrored pair at a cost of increased routing and assembly complexity. Figure 5-66 and Figure 5-67 show the routing for CK and ADDR_CTRL, respectively, for four DDR3 devices mirrored in a single-pair configuration.

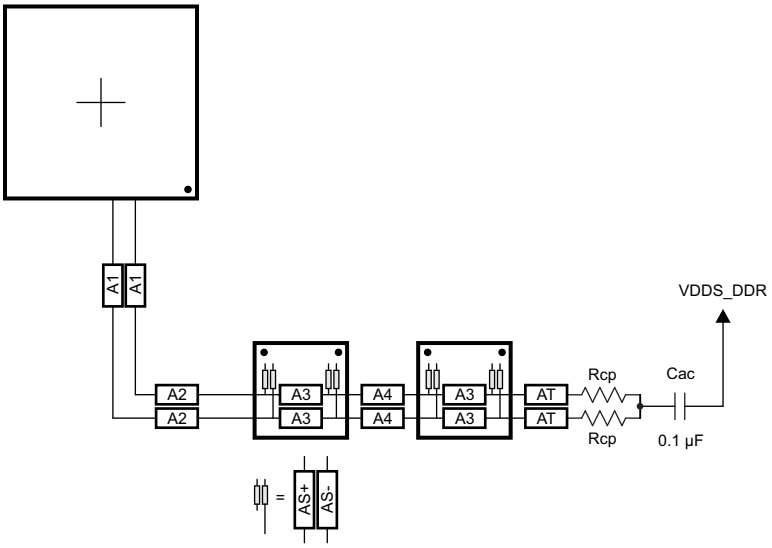

Figure 5-66. CK Routing for Four Mirrored DDR3 Devices

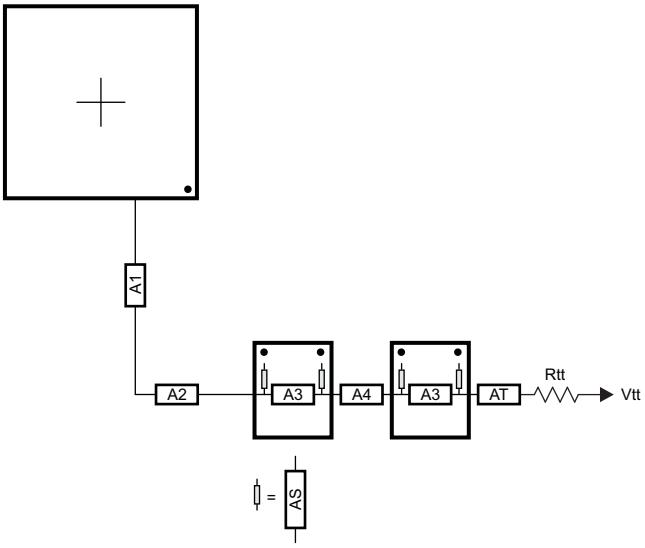

Figure 5-67. ADDR_CTRL Routing for Four Mirrored DDR3 Devices

Copyright © 2014–2019, Texas Instruments Incorporated

5.12.8.2.1.4.7 One 16-Bit DDR3 Device

One DDR3 device is supported on the DDR3 interface consisting of one x16 DDR3 device arranged as one 16-bit bank.

5.12.8.2.1.4.8 CK and ADDR_CTRL Topologies, One DDR3 Device

Figure 5-68 shows the topology of the CK net classes and Figure 5-69 shows the topology for the corresponding ADDR_CTRL net classes.

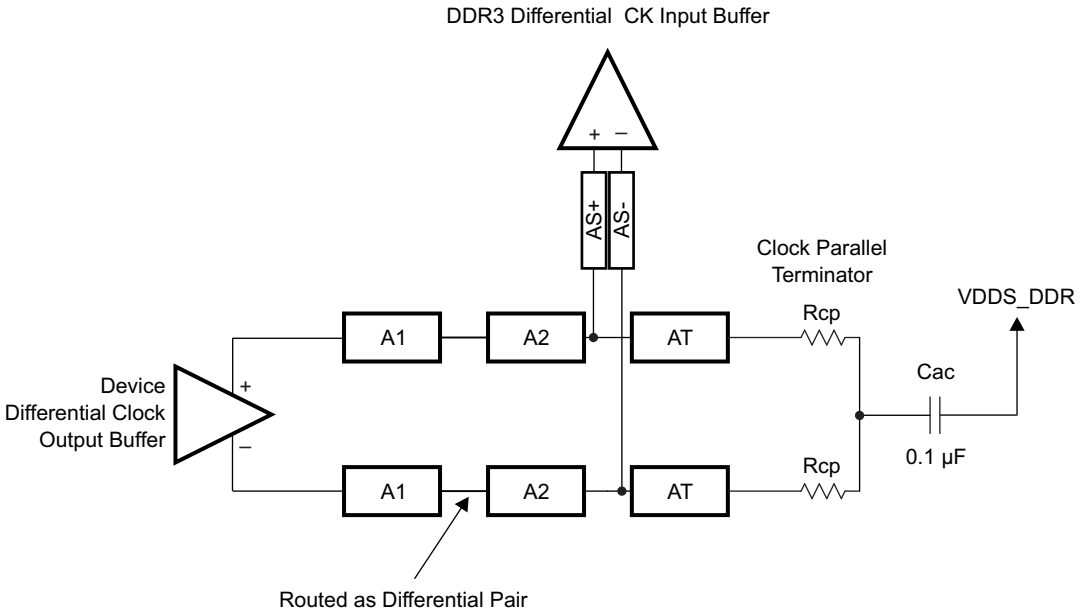

Figure 5-68. CK Topology for One DDR3 Device

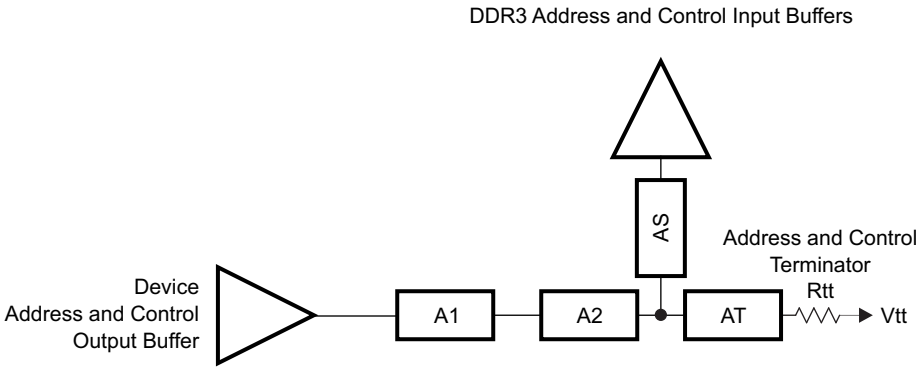

Figure 5-69. ADDR_CTRL Topology for One DDR3 Device

5.12.8.2.1.4.9 CK and ADDR_CTRL Routing, One DDR3 Device

Figure 5-70 shows the CK routing for one DDR3 device. Figure 5-71 shows the corresponding ADDR_CTRL routing.

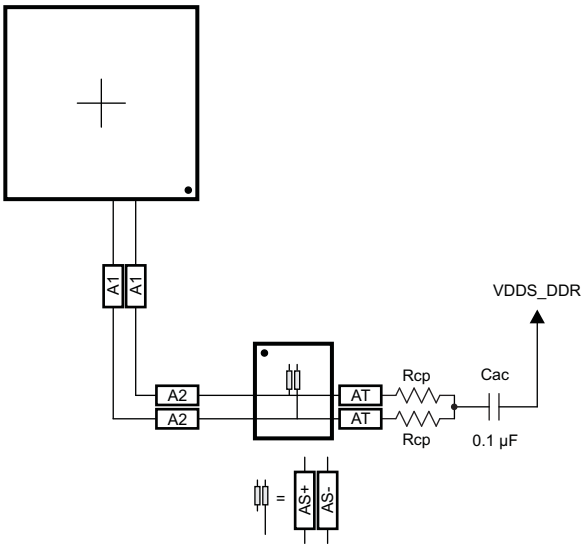

Figure 5-70. CK Routing for One DDR3 Device

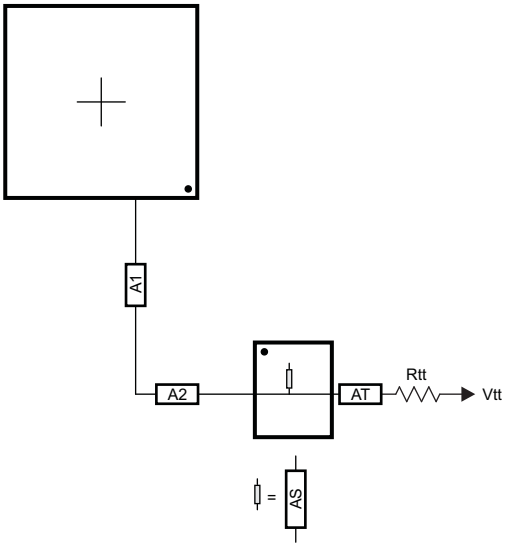

Figure 5-71. ADDR_CTRL Routing for One DDR3 Device

5.12.8.2.1.5 Data Topologies and Routing Definition

No matter the number of DDR3 devices used, the data line topology is always point to point, so its definition is simple.

5.12.8.2.1.5.1 DQS[x] and DQ[x] Topologies, Any Number of Allowed DDR3 Devices

DQS[x] lines are point-to-point differential, and DQ[x] lines are point-to-point singled ended. Figure 5-72 and Figure 5-73 show these topologies.

Copyright © 2014–2019, Texas Instruments Incorporated

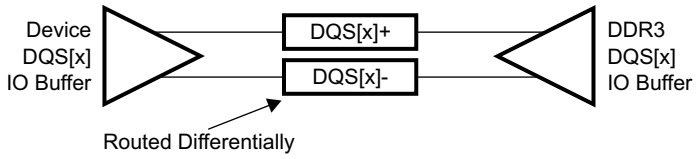

x = 0, 1, 2, 3

Figure 5-72. DQS[x] Topology

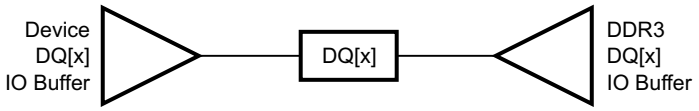

x = 0, 1, 2, 3

Figure 5-73. DQ[x] Topology

5.12.8.2.1.5.2 DQS[x] and DQ[x] Routing, Any Number of Allowed DDR3 Devices

Figure 5-74 and Figure 5-75 show the DQS[x] and DQ[x] routing.

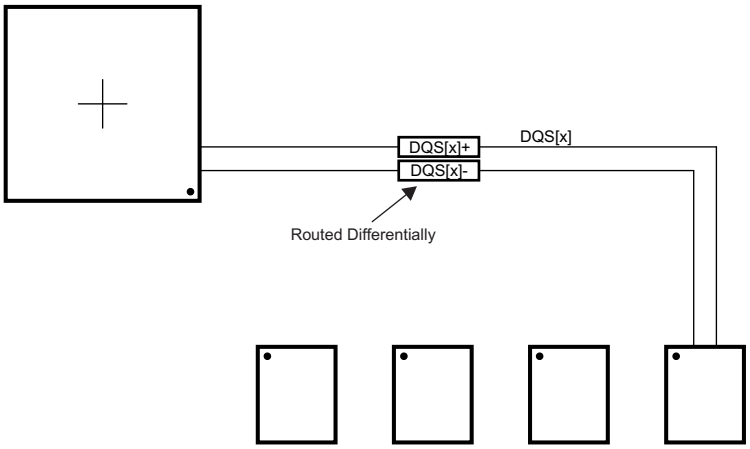

x = 0, 1, 2, 3

Figure 5-74. DQS[x] Routing With Any Number of Allowed DDR3 Devices

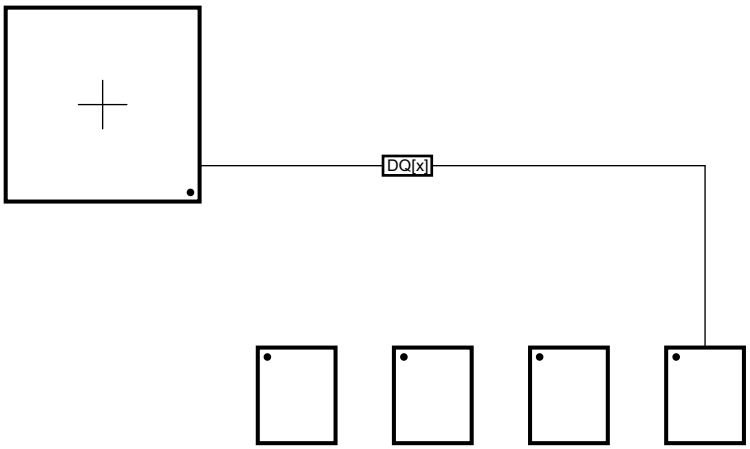

x = 0, 1, 2, 3

Figure 5-75. DQ[x] Routing With Any Number of Allowed DDR3 Devices

5.12.8.2.1.6 Routing Specification

5.12.8.2.1.6.1 CK and ADDR_CTRL Routing Specification

Skew within the CK and ADDR_CTRL net classes directly reduces setup and hold margin and, thus, this skew must be controlled. The only way to practically match lengths on a PCB is to lengthen the shorter traces up to the length of the longest net in the net class and its associated clock. A metric to establish this maximum length is Manhattan distance. The Manhattan distance between two points on a PCB is the length between the points when connecting them only with horizontal or vertical segments. A reasonable trace route length is to within a percentage of its Manhattan distance. CACLM is defined as Clock Address Control Longest Manhattan distance.

Given the clock and address pin locations on the device and the DDR3 memories, the maximum possible Manhattan distance can be determined given the placement. Figure 5-76 shows this distance for two loads. It is from this distance that the specifications on the lengths of the transmission lines for the address bus are determined. CACLM is determined similarly for other address bus configurations; that is, it is based on the longest net of the CK and ADDR_CTRL net class. For CK and ADDR_CTRL routing, these specifications are contained in Table 5-58.

Copyright © 2014–2019, Texas Instruments Incorporated

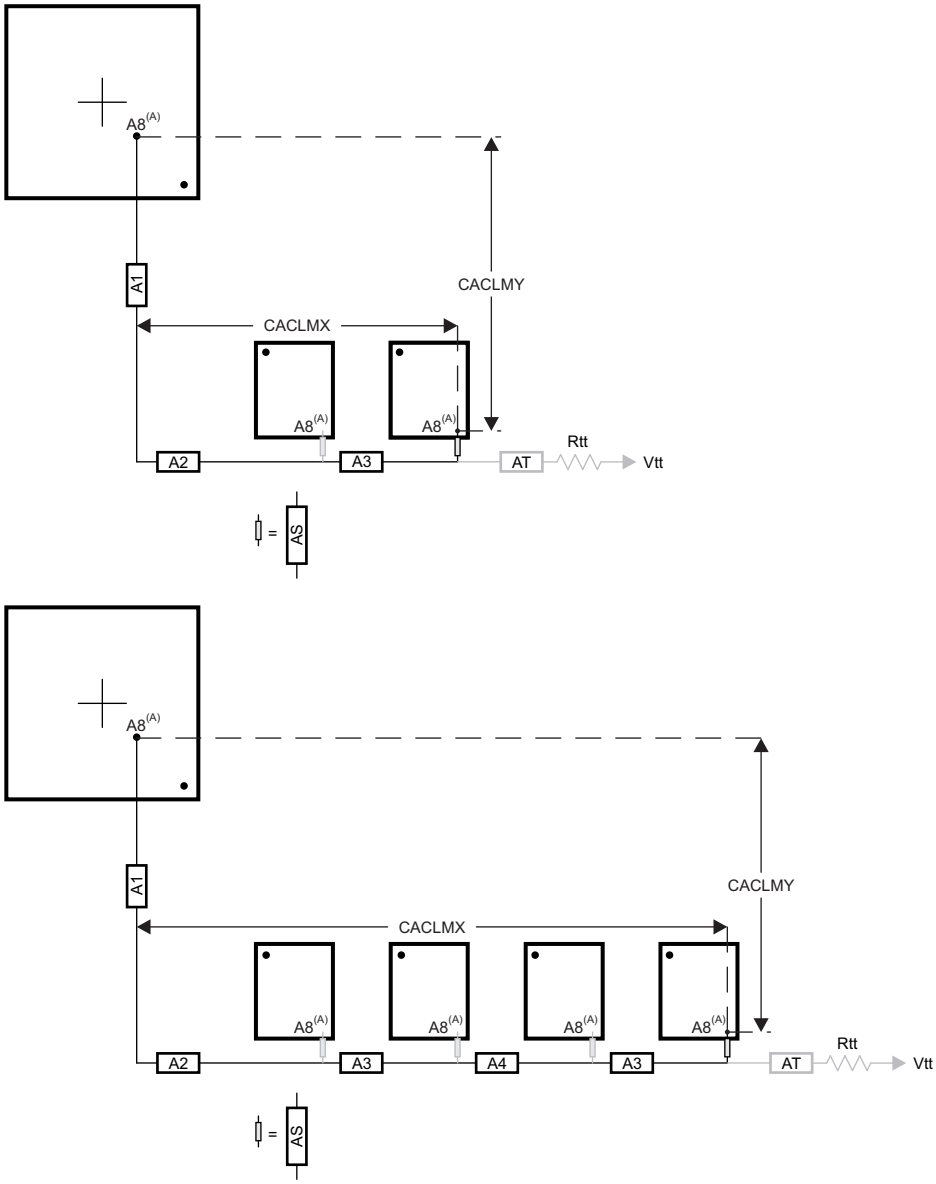

A. It is very likely that the longest CK and ADDR_CTRL Manhattan distance will be for Address Input 8 (A8) on the DDR3 memories. CACLM is based on the longest Manhattan distance due to the device placement. Verify the net class that satisfies this criteria and use as the baseline for CK and ADDR_CTRL skew matching and length control.

The length of shorter CK and ADDR_CTRL stubs as well as the length of the terminator stub are not included in this length calculation. Nonincluded lengths are grayed out in the figure.

Assuming A8 is the longest, CACLM = CACLMY + CACLMX + 300 mils.
The extra 300 mils allows for routing down lower than the DDR3 memories and returning up to reach A8.

Figure 5-76. CACLM for Two or Four Address Loads on One Side of PCB

Table 5-58. CK and ADDR_CTRL Routing Specification(1)(2)(3)

NO.	PARAMETER	MIN	TYP	MAX	UNIT
1	A1+A2 length			2500	mils
2	A1+A2 skew			25	mils
3	A3 length			660	mils
4	A3 skew(4)			25	mils
5	A3 skew(5)			125	mils

Table 5-58. CK and ADDR_CTRL Routing Specification(1)(2)(3) (continued)

NO.	PARAMETER	MIN	TYP	MAX	UNIT
6	A4 length			660	mils
7	A4 skew			25	mils
8	AS length			100	mils
9	AS skew			25	mils
10	AS+ and AS- length			70	mils
11	AS+ and AS- skew			5	mils
12	AT length(6)		500		mils
13	AT skew(7)		100		mils
14	AT skew(8)			5	mils
15	CK and ADDR_CTRL nominal trace length(9)	CACLM-50	CACLM	CACLM+50	mils
16	Center-to-center CK to other DDR3 trace spacing(10)	4			w
17	Center-to-center ADDR_CTRL to other DDR3 trace spacing(10)(11)	4			w
18	Center-to-center ADDR_CTRL to other ADDR_CTRL trace spacing(10)	3			w
19	CK center-to-center spacing(12)				
20	CK spacing to other net(10)	4			w
21	Rcp(13)	Zo-1	Zo	Zo+1	Ω
22	Rtt(13)(14)	Zo-5	Zo	Zo+5	Ω

(1) CK represents the clock net class, and ADDR_CTRL represents the address and control signal net class.
(2) The use of vias should be minimized.
(3) Additional bypass capacitors are required when using the VDDS_DDR plane as the reference plane to allow the return current to jump between the VDDS_DDR plane and the ground plane when the net class switches layers at a via.
(4) Mirrored configuration (one DDR3 device on top of the board and one DDR3 device on the bottom).
(5) Nonmirrored configuration (all DDR3 memories on same side of PCB).
(6) While this length can be increased for convenience, its length should be minimized.
(7) ADDR_CTRL net class only (not CK net class). Minimizing this skew is recommended, but not required.
(8) CK net class only.
(9) CACLM is the longest Manhattan distance of the CK and ADDR_CTRL net classes + 300 mils. For definition, see Section 5.12.8.2.1.6.1 and Figure 5-76.
(10) Center-to-center spacing is allowed to fall to minimum (w) for up to 1250 mils of routed length.
(11) Signals from one DQ net class should be considered other DDR3 traces to another DQ net class.
(12) CK spacing set to ensure proper differential impedance. Differential impedance should be Zo x 2, where Zo is the single-ended impedance defined in Table 5-52.
(13) Source termination (series resistor at driver) is specifically not allowed.
(14) Termination values should be uniform across the net class.

5.12.8.2.1.6.2 DQS[x] and DQ[x] Routing Specification

Skew within the DQS[x] and DQ[x] net classes directly reduces setup and hold margin and, thus, this skew must be controlled. The only way to practically match lengths on a PCB is to lengthen the shorter traces up to the length of the longest net in the net class and its associated clock. DQLMn is defined as DQ Longest Manhattan distance n, where n is the byte number. For a 16-bit interface, there are two DQLMs, DQLM0 and DQLM1.

NOTE

It is not required, nor is it recommended, to match the lengths across all bytes. Length matching is only required within each byte.

Copyright © 2014–2019, Texas Instruments Incorporated

Given the DQS[x] and DQ[x] pin locations on the device and the DDR3 memories, the maximum possible Manhattan distance can be determined given the placement. Figure 5-77 shows this distance for a two-load case. It is from this distance that the specifications on the lengths of the transmission lines for the data bus are determined. For DQS[x] and DQ[x] routing, these specifications are contained in Table 5-59.

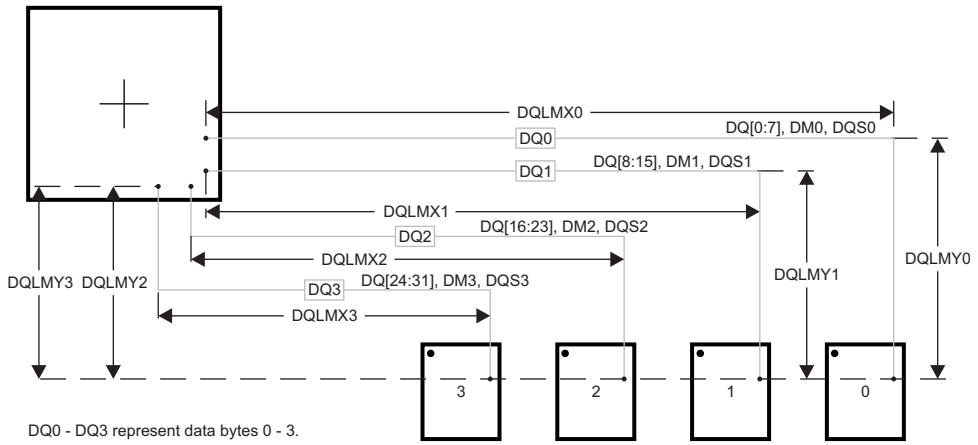

There are four DQLMs, one for each byte (16-bit interface). Each DQLM is the longest Manhattan distance of the byte; therefore:
DQLM0 = DQLMX0 + DQLMY0
DQLM1 = DQLMX1 + DQLMY1
DQLM2 = DQLMX2 + DQLMY2
DQLM3 = DQLMX3 + DQLMY3

Figure 5-77. DQLM for Any Number of Allowed DDR3 Devices

Table 5-59. DQS[x] and DQ[x] Routing Specification(1)(2)

NO.	PARAMETER	MIN	TYP	MAX	UNIT
1	DQ0 nominal length(3)(4)			DQLM0	mils
2	DQ1 nominal length(3)(5)			DQLM1	mils
3	DQ2 nominal length			DQLM2	mils
4	DQ3 nominal length			DQLM3	mils
5	DQ[x] skew(6)			25	mils
6	DQS[x] skew			5	mils
7	DQS[x]-to-DQ[x] skew(6)(7)			25	mils
8	Center-to-center DQ[x] to other DDR3 trace spacing(8)(9)	4			w
9	Center-to-center DQ[x] to other DQ[x] trace spacing(8)(10)	3			w
10	DQS[x] center-to-center spacing(11)				
11	DQS[x] center-to-center spacing to other net(8)	4			w

(1) DQS[x] represents the DQS0 and DQS1 clock net classes, and DQ[x] represents the DQ0 and DQ1 signal net classes.
(2) External termination disallowed. Data termination should use built-in ODT functionality.
(3) DQLMn is the longest Manhattan distance of a byte. For definition, see Section 5.12.8.2.1.6.2 and Figure 5-77.
(4) DQLM0 is the longest Manhattan length for the DQ0 net class.
(5) DQLM1 is the longest Manhattan length for the DQ1 net class.
(6) Length matching is only done within a byte. Length matching across bytes is not required. To maintain tighter delay skew, route the DQ[x] and DQS[x] signals within a byte to have same number of VIA and layer transitions.
(7) Each DQS clock net class is length matched to its associated DQ signal net class.
(8) Center-to-center spacing is allowed to fall to minimum for up to 1250 mils of routed length.
(9) Other DDR3 trace spacing means signals that are not part of the same DQ[x] signal net class.
(10) This applies to spacing within same DQ[x] signal net class.
(11) DQS[x] pair spacing is set to ensure proper differential impedance. Differential impedance should be Zo × 2, where Zo is the single-ended impedance defined in Table 5-52.

Copyright © 2014–2019, Texas Instruments Incorporated

5.12.8.2.2 LPDDR2 Routing Guidelines

This section provides the timing specification for the LPDDR2 interface as a PCB design and manufacturing specification. The design rules constrain PCB trace length, PCB trace skew, signal integrity, cross-talk, and signal timing. These rules, when followed, result in a reliable LPDDR2 memory system without the need for a complex timing closure process. For more information regarding guidelines for using this LPDDR2 specification, see *Understanding TI's PCB Routing Rule-Based DDR Timing Specification*. This application report provides generic guidelines and approach. All the specifications provided in the data manual take precedence over the generic guidelines and must be adhered to for a reliable LPDDR2 interface operation.

5.12.8.2.2.1 LPDDR2 Board Designs

TI only supports board designs using LPDDR2 memory that follow the guidelines in this document. The switching characteristics and timing diagram for the LPDDR2 memory interface are shown in Table 5-60 and Figure 5-78.

Table 5-60. Switching Characteristics for LPDDR2 Memory Interface

NO.	PARAMETER		MIN	MAX	UNIT
1	$t_{c(DDR_CK)}$	Cycle time, DDR_CK and DDR_CKn	7.52	3.76[(1)]	ns

(1) The JEDEC JESD209-2F standard defines the maximum clock period of 100 ns for all standard-speed bin LPDDR2 memory. The device has only been tested per the limits published in this table.

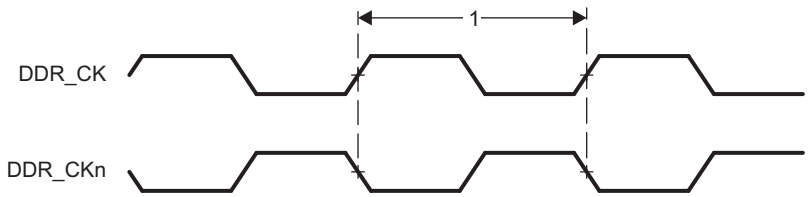

Figure 5-78. LPDDR2 Memory Interface Clock Timing

5.12.8.2.2.2 LPDDR2 Device Configurations

There are several possible combinations of device counts and single-side or dual-side mounting. Table 5-61 lists all the supported configurations.

Table 5-61. Supported LPDDR2 Device Combinations

NUMBER OF LPDDR2 DEVICES	LPDDR2 DEVICE WIDTH (BITS)	MIRRORED?[(1)]	LPDDR2 EMIF WIDTH (BITS)
1	32	N	32
2[(2)]	32	N	32
1	16	N	16
2[(2)]	16	N	16

(1) Two LPDDR2 devices are mirrored when one device is placed on the top of the board and the second device is placed on the bottom of the board.

(2) Two devices are supported only with twin-die configuration which embeds two devices in the same package.

Details on treating unused pins are listed in Section 5.12.8.2.2.3.1.

Copyright © 2014–2019, Texas Instruments Incorporated

5.12.8.2.2.3 LPDDR2 Interface

5.12.8.2.2.3.1 LPDDR2 Interface Schematic

The LPDDR2 interface schematic varies, depending upon the width of the LPDDR2 devices used. Figure 5-79 shows the schematic connections for 16-bit interface using one x16 LPDDR2 device. Two x16 LPDDR2 devices are supported for twin-die configuration which embeds two devices in the same package.

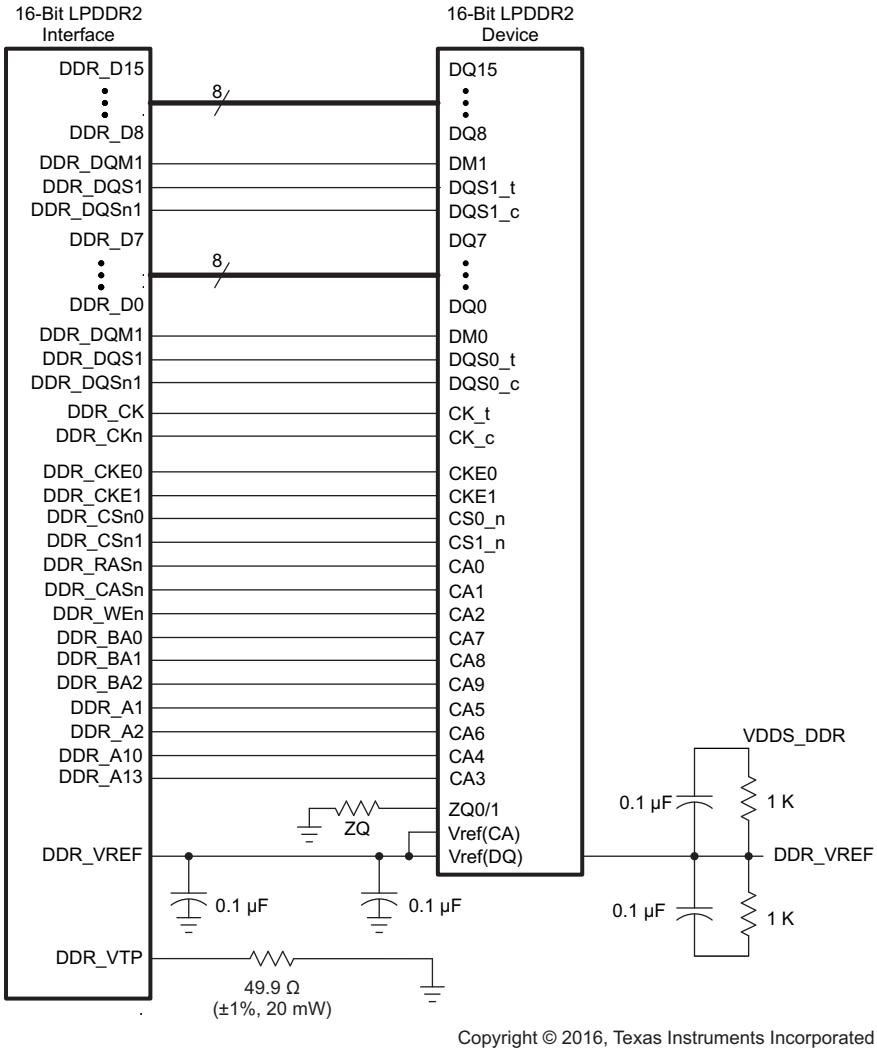

Figure 5-79. 16-Bit Interface Using One 16-Bit LPDDR2 Device

Figure 5-80 shows the schematic connections for 32-bit interface using one x32 LPDDR2 device.

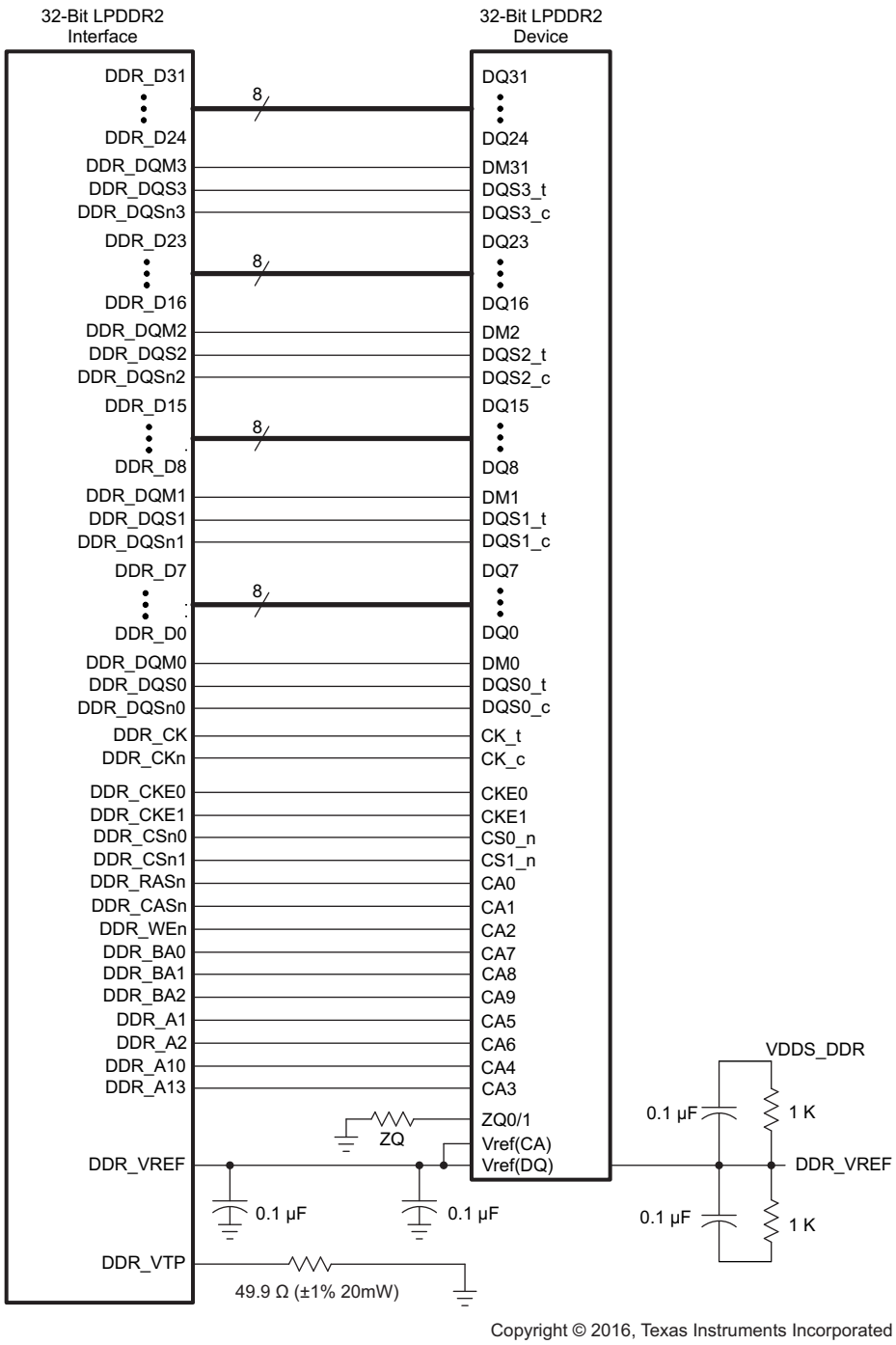

Figure 5-80. 32-Bit Interface Using One 32-Bit LPDDR2 Device

When not using a part of LPDDR2 interface (using x16 or not using the LPDDR2 interface):

- Connect the VDDS_DDR supply to 1.8 V
- Connect the DDR_VREF supply to 0.9 V
- Tie off DDR_DQS[x] (x=0,1,2,3) that are unused to VSS via 1 kΩ
- Tie off DDR_DQSn[x] (x=0,1,2,3) that are unused to VDDS_DDR via 1 kΩ
- All other unused pins can be left as NC.

Note: All the unused DDR ADDR_CTRL lines used for DDR3 operation should be left as NC.

Copyright © 2014–2019, Texas Instruments Incorporated

5.12.8.2.2.3.2 Compatible JEDEC LPDDR2 Devices

Table 5-62 shows the supported LPDDR2 device configurations which are compatible with this interface.

Table 5-62. Compatible JEDEC LPDDR2 Devices (Per Interface)

NO.	PARAMETER	CONDITION	MIN	MAX	UNIT
1	JEDEC LPDDR2 device speed grade	$t_{c(DDR_CK)}$ and $t_{c(DDR_CKn)}$	LPDDR2-533		
2	JEDEC LPDDR2 device bit width		x16	x32	Bits
3	JEDEC LPDDR2 device count		1	2[(1)]	Devices

(1) Two devices are supported only with twin-die configuration which embeds two devices in the same package.

5.12.8.2.2.3.3 LPDDR2 PCB Stackup

Table 5-63 shows the minimum stackup requirements. Additional layers may be added to the PCB stackup to accommodate other circuitry, enhance signal integrity and electromagnetic interference performance, or to reduce the size of the PCB footprint.

Table 5-63. Minimum PCB Stackup

LAYER	TYPE	DESCRIPTION
1	Signal	Top signal routing
2	Plane	Ground
3	Plane	Power
4	Signal	Bottom signal routing

PCB stackup specifications for LPDDR2 interface are listed in Table 5-64.

Table 5-64. PCB Stackup Specifications[(1)]

NO.	PARAMETER	MIN	TYP	MAX	UNIT
1	PCB routing and plane layers	4			
2	Signal routing layers	2			
3	Full ground reference layers under LPDDR2 routing region[(1)]	1			
4	Full VDDS_DDR power reference layers under the LPDDR2 routing region[(1)]	1			
5	Number of reference plane cuts allowed within LPDDR2 routing region[(2)]			0	
6	Number of layers between LPDDR2 routing layer and reference plane[(3)]			0	
7	PCB routing feature size		4		mils
8	PCB trace width, w		4		mils
9	PCB BGA escape via pad size[(4)]		18	20	mils
10	PCB BGA escape via hole size		10		mils
11	Single-ended impedance, Zo[(5)]		50	75	Ω
12	Impedance control[(6)(7)]	Zo-5	Zo	Zo+5	Ω

(1) Ground reference layers are preferred over power reference layers. Be sure to include bypass caps to accommodate reference layer return current as the trace routes switch routing layers.

(2) No traces should cross reference plane cuts within the LPDDR2 routing region. High-speed signal traces crossing reference plane cuts create large return current paths which can lead to excessive crosstalk and EMI radiation.

(3) Reference planes are to be directly adjacent to the signal plane to minimize the size of the return current loop.

(4) An 18-mil pad assumes Via Channel is the most economical BGA escape. A 20-mil pad may be used if additional layers are available for power routing. An 18-mil pad is required for minimum layer count escape.

(5) Zo is the nominal singled-ended impedance selected for the PCB.

(6) This parameter specifies the AC characteristic impedance tolerance for each segment of a PCB signal trace relative to the chosen Zo defined by the single-ended impedance parameter.

(7) Tighter impedance control is required to ensure flight time skew is minimal.

Copyright © 2014–2019, Texas Instruments Incorporated

5.12.8.2.2.3.4 LPDDR2 Placement

Figure 5-81 shows the placement rules for the device as well as the LPDDR2 memory device. Placement restrictions are provided as a guidance to restrict maximum trace lengths and allow for proper routing space.

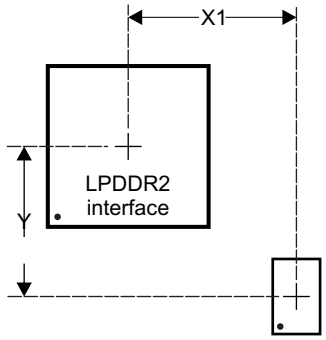

Figure 5-81. Placement Specifications

Table 5-65. Placement Specifications[(1)]

NO.	PARAMETER	MIN	MAX	UNIT
1	X1 Offset[(2)(3)]		1500	mils
2	Y Offset[(2)(3)(4)]		1500	mils
3	Clearance from non-LPDDR2 signal to LPDDR2 keepout region[(4)(5)]	4		w

(1) LPDDR2 keepout region to encompass entire LPDDR2 routing area.
(2) Measurements from center of device to center of LPDDR2 device.
(3) Minimizing X1 and Y improves timing margins.
(4) w is defined as the signal trace width.
(5) Non-LPDDR2 signals allowed within LPDDR2 keepout region provided they are separated from LPDDR2 routing layers by a ground plane.

5.12.8.2.2.3.5 LPDDR2 Keepout Region

The region of the PCB used for LPDDR2 circuitry must be isolated from other signals. The LPDDR2 keepout region is defined for this purpose and is shown in Figure 5-82. This region should encompass all LPDDR2 circuitry and the region size varies with component placement and LPDDR2 routing. Non-LPDDR2 signals should not be routed on the same signal layer as LPDDR2 signals within the LPDDR2 keepout region. Non-LPDDR2 signals may be routed in the region provided they are routed on layers separated from LPDDR2 signal layers by a ground layer. No breaks should be allowed in the reference ground or VDDS_DDR power plane in this region. In addition, the VDDS_DDR power plane should cover the entire keepout region.

Copyright © 2014–2019, Texas Instruments Incorporated

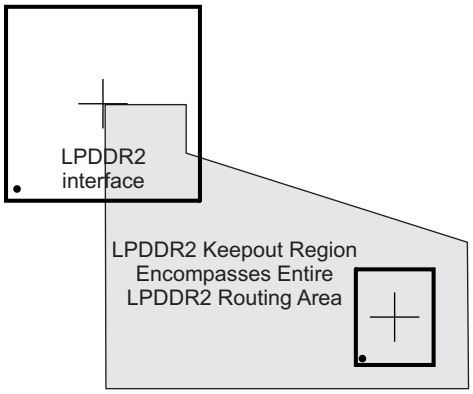

Figure 5-82. LPDDR2 Keepout Region

5.12.8.2.2.3.6 LPDDR2 Net Classes

Table 5-66. Clock Net Class Definitions for the LPDDR2 Interface

CLOCK NET CLASS	PIN NAMES
CK	DDR_CK and DDR_CKn
DQS0	DDR_DQS0 and DDR_DQSn0
DQS1	DDR_DQS1 and DDR_DQSn1
DQS2	DDR_DQS2 and DDR_DQSn2
DQS3	DDR_DQS3 and DDR_DQSn3

Table 5-67. Signal Net Class and Associated Clock Net Class for LPDDR2 Interface

SIGNAL NET CLASS	ASSOCIATED CLOCK NET CLASS	PIN NAMES
ADDR_CTRL	CK	DDR_BA[2:0], DDR_CSn0, DDR_CSn1, DDR_CKE0, DDR_CKE1, DDR_RASn, DDR_CASn, DDR_WEn, DDR_A1, DDR_A2, DDR_A10, DDR_A13
DQ0	DQS0	DDR_D[7:0], DDR_DQM0
DQ1	DQS1	DDR_D[15:8], DDR_DQM1
DQ2	DQS2	DDR_D[23:16], DDR_DQM2
DQ3	DQS3	DDR_D[31:24], DDR_DQM3

5.12.8.2.2.3.7 LPDDR2 Signal Termination

On-device termination (ODT) is available for DQ[3:0] signal net classes, but is not specifically required for normal operation. System designers may evaluate the need for additional series termination if required based on signal integrity, EMI and overshoot/undershoot reduction.

5.12.8.2.2.3.8 LPDDR2 DDR_VREF Routing

DDR_VREF is the reference voltage for the input buffers on the LPDDR2 memory as well as the device. DDR_VREF is intended to be half the LPDDR2 power supply voltage and is typically generated with a voltage divider connected to the VDDS_DDR power supply. It should be routed as a nominal 20-mil wide trace with 0.1-µF bypass capacitors near each device connection. Narrowing of DDR_VREF is allowed to accommodate routing congestion.

5.12.8.2.2.4 Routing Specification

5.12.8.2.2.4.1 DQS[x] and DQ[x] Routing Specification

DQS[x] lines are point-to-point differential and DQ[x] lines are point-to-point single ended. Figure 5-83 and Figure 5-84 represent the supported topologies. Figure 5-85 and Figure 5-86 show the DQS[x] and DQ[x] routing. Figure 5-87 shows the DQLM for the LPDDR2 interface.

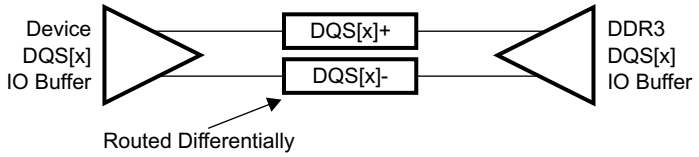

x = 0, 1, 2, 3

Figure 5-83. DQS[x] Topology

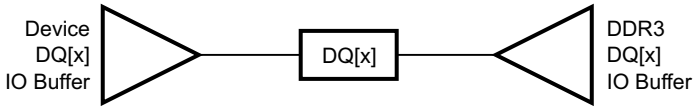

x = 0, 1, 2, 3

Figure 5-84. DQ[x] Topology

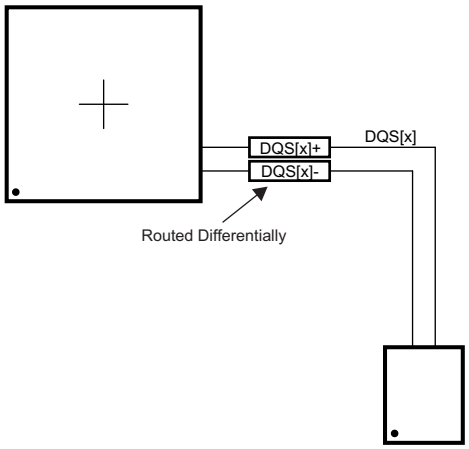

x = 0, 1, 2, 3

Figure 5-85. DQS[x] Routing

Copyright © 2014–2019, Texas Instruments Incorporated

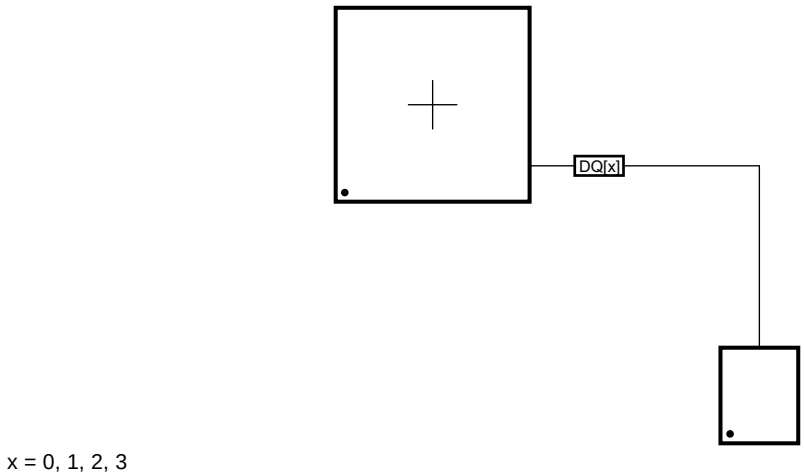

Figure 5-86. DQ[x] Routing

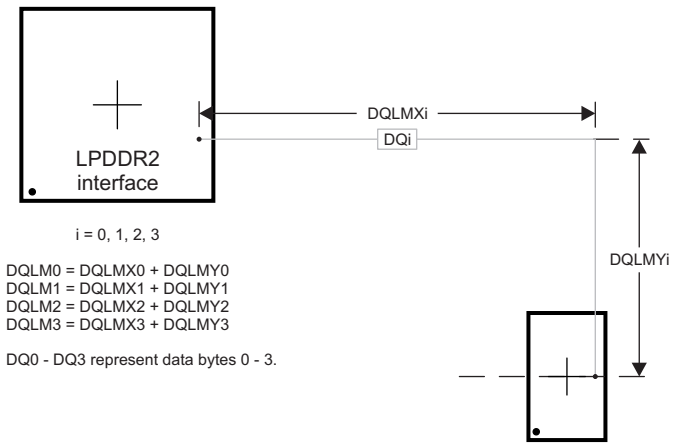

There are four DQLMs, one for each data byte, in a 32-bit interface and two DQLMs, one for each data byte, in a 16-bit interface. Each DQLM is the longest Manhattan distance of the byte.

Figure 5-87. DQLM for LPDDR2 Interface

Trace routing specifications for the DQ[x] and the DQS[x] are specified in Table 5-68.

Table 5-68. DQS[x] and DQ[x] Routing Specification[(1)(2)]

NO.	PARAMETER	MIN	TYP	MAX	UNIT
1	DQ0 nominal length[(3)(4)]			DQLM0	mils
2	DQ1 nominal length[(3)(5)]			DQLM1	mils
3	DQ2 nominal length [(3)(6)]			DQLM2	mils
4	DQ3 nominal length [(3)(7)]			DQLM3	mils
5	DQ[x] skew[(8)]			50	mils
6	DQS[x] skew			10	mils
7	Via count per each trace in DQ[x], DQS[x]			2	
8	Via count difference across a given DQ[x], DQS[x]			0	
9	DQS[x]-to-DQ[x] skew[(8)(9)]			50	mils
10	Center-to-center DQ[x] to other LPDDR2 trace spacing[(10)(11)]	4			w
11	Center-to-center DQ[x] to other DQ[x] trace spacing[(10)(12)]	3			w
12	DQS[x] center-to-center spacing[(13)]				
13	DQS[x] center-to-center spacing to other net[(10)]	4			w

(1) DQS[x] represents the DQS0, DQS1, DQS2, DQS3 clock net classes, and DQ[x] represents the DQ0, DQ1, DQ2, DQ3 signal net classes.
(2) External termination disallowed. Data termination should use built-in ODT functionality.
(3) DQLMn is the longest Manhattan distance of a byte.
(4) DQLM0 is the longest Manhattan length for the DQ0 net class.
(5) DQLM1 is the longest Manhattan length for the DQ1 net class.
(6) DQLM2 is the longest Manhattan length for the DQ2 net class.
(7) DQLM3 is the longest Manhattan length for the DQ3 net class.
(8) Length matching is only done within a byte. Length matching across bytes is not required.
(9) Each DQS clock net class is length matched to its associated DQ signal net class.
(10) Center-to-center spacing is allowed to fall to minimum for up to 1000 mils of routed length.
(11) Other LPDDR2 trace spacing means signals that are not part of the same DQ[x] signal net class.
(12) This applies to spacing within same DQ[x] signal net class.
(13) DQS[x] pair spacing is set to ensure proper differential impedance. Differential impedance should be Zo x 2, where Zo is the single-ended impedance.

5.12.8.2.2.4.2 CK and ADDR_CTRL Routing Specification

CK signals are routed as point-to-point differential, and ADDR_CTRL signals are routed as point-to-point single ended. The supported topology for CK and ADDR_CTRL are shown in Figure 5-88 through Figure 5-91. ADDR_CTRL are routed very similar to DQ and CK is routed very similar to DQS.

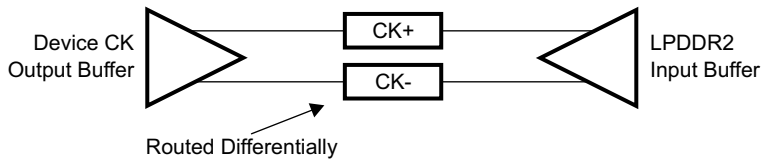

Figure 5-88. CK Signals Topology

Figure 5-89. ADDR_CTRL Signals Topology

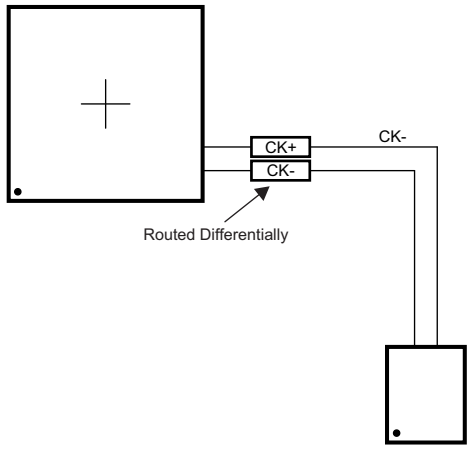

Figure 5-90. CK Signals Routing

Copyright © 2014–2019, Texas Instruments Incorporated

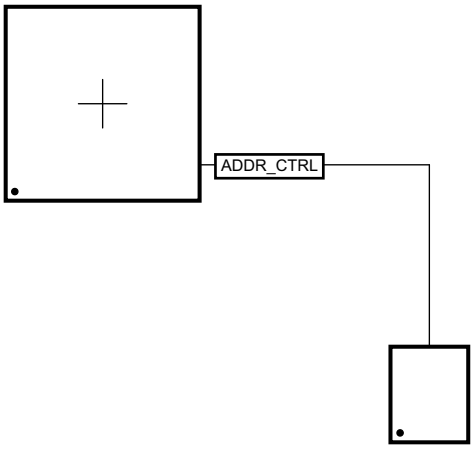

Figure 5-91. ADDR_CTRL Signals Routing

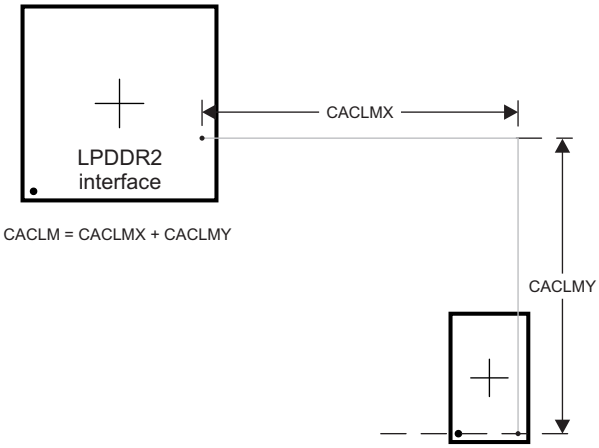

CACLM is the longest Manhattan distance of the CK/ADDR_CTRL signal class.

Figure 5-92. CACLM for LPDDR2 Interface

Trace routing specifications for the CK and the ADD_CTRL are specified in Table 5-69.

Table 5-69. CK and ADDR_CTRL Routing Specification

NO.	PARAMETER	MIN	TYP	MAX	UNIT
1	CK and ADDR_CTRL nominal trace length(1)			CACLM	mils
2	ADDR_CTRL skew			50	mils
3	CK skew			10	mils
4	Via count per each trace ADDR_CTRL, CK			2	
5	Via count difference across ADDR_CTRL, CK			0	
6	ADDR_CTRL-to-CK skew			50	mils
7	Center-to-center ADDR_CTRL to other LPDDR2 trace spacing(2)(3)	4			w
8	Center-to-center ADDR_CTRL to other ADDR_CTRL trace spacing(2)	3			w
9	CK center-to-center spacing(4)				
10	CK center-to-center spacing to other net(2)	4			w

(1) CACLM is the longest Manhattan distance of ADDR_CTRL and CK.

(2) Center-to-center spacing is allowed to fall to minimum for up to 1000 mils of routed length.

(3) Other LPDDR2 trace spacing means signals that are not part of the same CK, ADDR_CTRL signal net class.

(4) CK pair spacing is set to ensure proper differential impedance. Differential impedance should be Zo x 2, where Zo is the single ended impedance.

Copyright © 2014–2019, Texas Instruments Incorporated

5.12.9 Display Subsystem (DSS)

NOTE

For more information, see the Display Subsystem chapter of the *AM437x Sitara Processors Technical Reference Manual*.

The display subsystem (DSS) provides the logic to display the video frame from external (SDRAM) or internal (SRAM) memory on an LCD panel or a TV set. The display subsystem integrates the following elements:

- Display controller (DISPC) module
- Remote frame buffer interface (RFBI) module

The DSS can be used in the following configuration: LCD display with parallel interface

5.12.9.1 DSS—Parallel Interface

In parallel interface, the paths of the display subsystem modules are the display controller and the RFBI. The display controller has two I/O pad modes and could be in the following configuration:

- Bypass mode (RFBI disabled), which implements the MIPI DPI protocol
- RFBI mode (RFBI enabled), which implements MIPI DBI 2.0 type B protocol

5.12.9.1.1 DSS—Parallel Interface—Bypass Mode

Two types of LCD panel are supported:

- Thin film transistor (TFT) or active matrix technology
- Supertwisted nematic (STN) or passive matrix technology

Both configurations are discussed in the following paragraphs.

5.12.9.1.1.1 DSS—Parallel Interface—Bypass Mode—TFT Mode

Table 5-71 assumes testing over the recommended operating conditions and electrical characteristic conditions below (see Figure 5-93).

Table 5-70. DSS Timing Conditions—TFT Mode

TIMING CONDITION PARAMETER		VALUE		UNIT
		MIN	MAX	
Output Condition				
C_{LOAD}	Output load capacitance		10	pF

Table 5-71. DSS Switching Characteristics—TFT Mode

NO.	PARAMETER		OPP100		OPP50		UNIT
			MIN	MAX	MIN	MAX	
DL0	$t_{d(pclkA\text{-}hsync)}$	Delay time, output pixel clock dss_pclk active edge to output horizontal synchronization dss_hsync transition	-2.4	2.4	-3.5	2.5	ns
DL1	$t_{d(pclkA\text{-}vsync)}$	Delay time, output pixel clock dss_pclk active edge to output vertical synchronization dss_vsync transition	-2.4	2.4	-3.5	2.5	ns
DL2	$t_{d(pclkA\text{-}acbiasA)}$	Delay time, output pixel clock dss_pclk active edge to output data enable dss_acbias active level	-2.4	2.4	-3.5	2.5	ns
DL3	$t_{d(pclkA\text{-}dV)}$	Delay time, output pixel clock dss_pclk active edge to output data dss_data[23:0] valid	-2.4	2.4	-3.5	2.5	ns
DL4	$1 / t_{c(pclk)}$	Frequency[(1)], output pixel clock dss_pclk		100		75	MHz

Copyright © 2014–2019, Texas Instruments Incorporated

Table 5-71. DSS Switching Characteristics—TFT Mode (continued)

NO.	PARAMETER		OPP100		OPP50		UNIT
			MIN	MAX	MIN	MAX	
DL5	$t_{w(pclk)}$	Pulse duration, output pixel clock dss_pclk low or high	0.45P(2)	0.55P(2)(3)	0.45P(2)	0.55P(2)(3)	ns
	$t_{J(pclk)}$	Peak-peak jitter, output pixel clock dss_pclk		200		200	ps

(1) The pixel clock frequency is software programmable via the pixel clock DISPC_DIVISOR register.
(2) P = dss_pclk period in ns
(3) $t_{w(pclk)}$ = 0.66P when DISPC_DIVISOR[7:0] PCD = 3

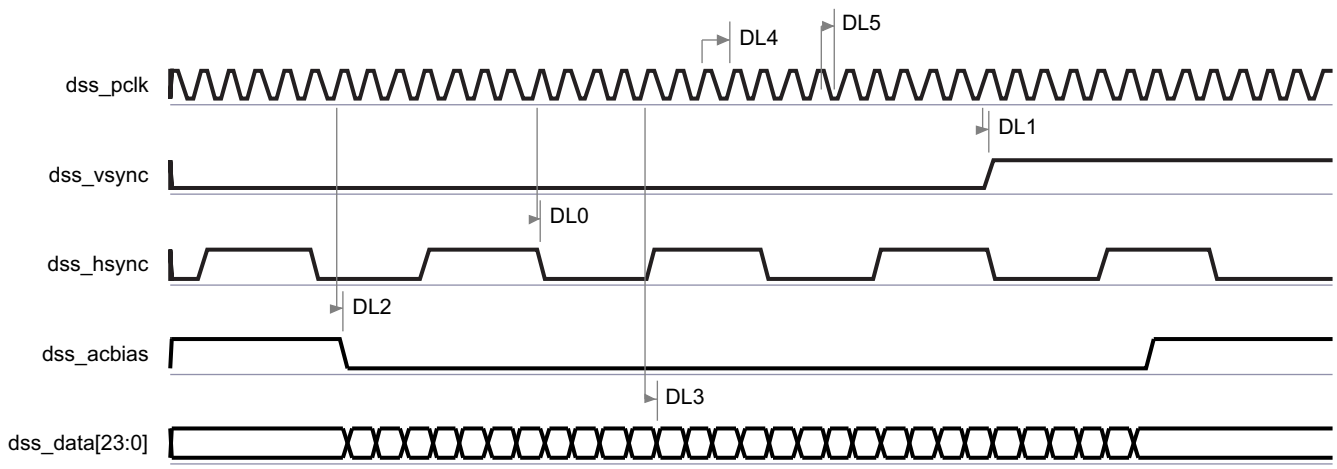

A. The pixel data bus depends on the use of 8-, 9-, 12-, 16-, 18-, or 24-bit per pixel data output pins.
B. The pixel clock frequency is programmable.
C. All timings not illustrated in the waveform are progammable by software, and control signal polarity and driven edge of dss_pclk too.
D. For more information, see the DSS chapter in the *AM437x Sitara Processors Technical Reference Manual*.

Figure 5-93. DSS—TFT Mode

5.12.9.1.1.2 DSS—Parallel Interface—Bypass Mode—STN Mode

Table 5-73 assumes testing over the recommended operating conditions and electrical characteristic conditions below (see Figure 5-94).

Table 5-72. DSS Timing Conditions—STN Mode

TIMING CONDITION PARAMETER		VALUE		UNIT
		MIN	MAX	
Output Condition				
C_{LOAD}	Output load capacitance		40	pF

Table 5-73. DSS Switching Characteristics—STN Mode(1)

NO.	PARAMETER		OPP100		OPP50		UNIT
			MIN	MAX	MIN	MAX	
DL3	$t_{d(pclkA-dV)}$	Delay time, output pixel clock dss_pclk active edge to output data dss_data[7:0] valid	-6	6	-6	6	ns
DL4	1 / $t_{c(pclk)}$	Frequency(2), output pixel clock dss_pclk		45		45	MHz
DL5	$t_{w(pclk)}$	Pulse duration, output pixel clock dss_pclk low or high	0.45P(3)	0.55P(3)(4)	0.45P(3)	0.55P(3)(4)	ns

(1) The DSS in STN mode is used with 4 or 8 pins only; unused pixel data bits always remain low.
(2) The pixel clock frequency is software programmable via the pixel clock divider DISPC_DIVISOR register.
(3) P = dss_pclk period in ns
(4) $t_{W(pclk)}$ = 0.66P when DISPC_DIVISOR[7:0] PCD = 3

Copyright © 2014–2019, Texas Instruments Incorporated

Table 5-73. DSS Switching Characteristics—STN Mode[(1)] (continued)

NO.	PARAMETER		OPP100		OPP50		UNIT
			MIN	MAX	MIN	MAX	
	$t_{J(pclk)}$	Peak-peak jitter, output pixel clock dss_pclk		200		200	ps

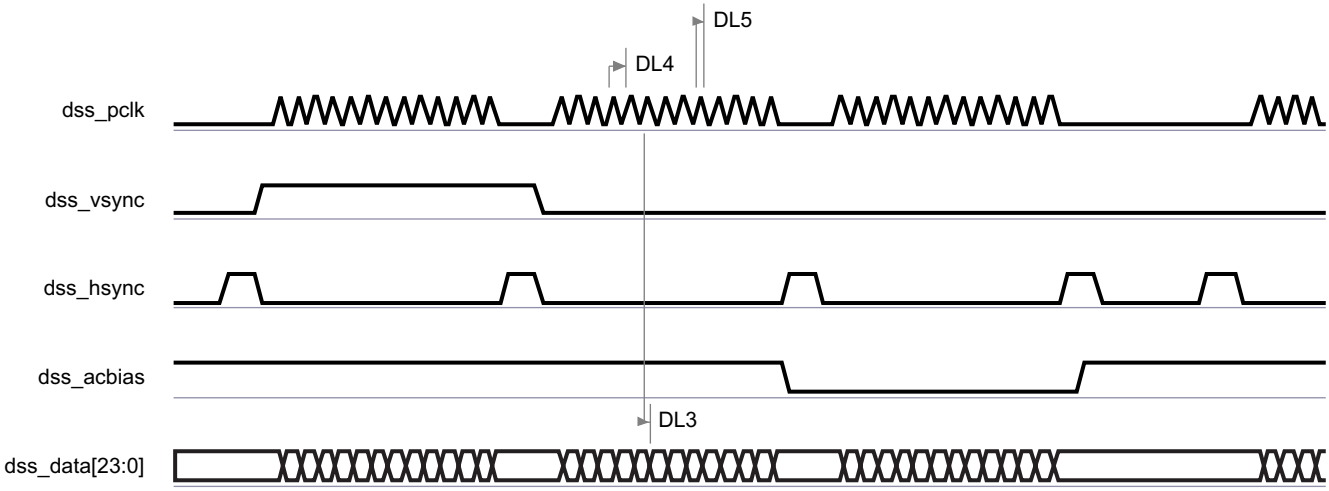

A. The pixel data bus depends on the use of 4-, 8-, 12-, 16-, 18-, or 24-bit per pixel data output pins.
B. All timings not illustrated in the waveform are progammable by software, and control signal polarity and driven edge of dss_pclk too.
C. dss_vsync width must be programmed to be as small as possible.
D. The pixel clock frequency is programmable.
E. For more information, see the DSS chapter in the *AM437x Sitara Processors Technical Reference Manual*.

Figure 5-94. DSS—STN Mode

5.12.9.1.2 DSS—Parallel Interface—RFBI Mode—Applications

5.12.9.1.2.1 DSS—Parallel Interface—RFBI Mode—MIPI DBI 2.0—LCD Panel

The Remote Frame Buffer Interface (RFBI) module provides the necessary control signals and data (MIPI® DBI 2.0 type B protocol) to interface to the LCD driver of the LCD panel.

Table 5-75 and Table 5-76 assume testing over the recommended operating conditions and electrical characteristic conditions below (see Figure 5-95, Figure 5-96, and Figure 5-97).

Table 5-74. DSS Timing Conditions—RFBI Mode—MIPI DBI 2.0—LCD Panel[(1)]

TIMING CONDITION PARAMETER		VALUE		UNIT
		MIN	MAX	
Input Conditions				
t_R	Input signal rise time		7	ns
t_F	Input signal fall time		7	ns
Output Condition				
C_{LOAD}	Output load capacitance		30	pF

(1) For any information regarding the RFBI registers configuration, see the Display Subsystem / Display Subsystem Environment / LCD Support / Parallel Interface / Parallel Interface in RFBI Mode (MIPI DBI Protocol) / Transaction Timing Diagrams section of the *AM437x Sitara Processors Technical Reference Manual*.

Copyright © 2014–2019, Texas Instruments Incorporated

Table 5-75. DSS Timing Requirements—RFBI Mode—MIPI DBI 2.0—LCD Panel

NO.	PARAMETER		OPP100		OPP50		UNIT
			MIN	MAX	MIN	MAX	
DR0	$t_{su(dV-rdH)}$	Setup time, input data rfbi_da[15:0] valid to output read enable rfbi_rd high	7		7		ns
DR1	$t_{h(rdH-dIV)}$	Hold time, output read enable rfbi_rd high to input data rfbi_da[15:0] invalid	5		5		ns
	$t_{d(Data\ sampled)}$	Input data rfbi_da[15:0] sampled at the end of the access time	N(1)		N(1)		ns

(1) N = (AccessTime) × (TimeParaGranularity + 1) × L4CLK

Table 5-76. DSS Switching Characteristics—RFBI Mode—MIPI DBI 2.0—LCD Panel

PARAMETER		OPP100		OPP50		UNIT
		MIN	MAX	MIN	MAX	
$t_{w(wrH)}$	Pulse duration, output write enable rfbi_wr high	A(1)		A(1)		ns
$t_{w(wrL)}$	Pulse duration, output write enable rfbi_wr low	B(2)		B(2)		ns
$t_{d(a0-wrL)}$	Delay time, output command/data control rfbi_a0 transition to output write enable rfbi_wr low	C(3)		C(3)		ns
$t_{d(wrH-a0)}$	Delay time, output write enable rfbi_wr high to output command/data control rfbi_a0 transition	D(4)		D(4)		ns
$t_{d(csx-wrL)}$	Delay time, output chip select rfbi_csx(14) low to output write enable rfbi_wr low	E(5)		E(5)		ns
$t_{d(wrH-csxH)}$	Delay time, output write enable rfbi_wr high to output chip select rfbi_csx(14) high	F(6)		F(6)		ns
$t_{d(dV)}$	Output data rfbi_da[15:0] valid	G(7)		G(7)		ns
$t_{d(a0H-rdL)}$	Delay time, output command/data control rfbi_a0 high to output read enable rfbi_rd low	H(8)		H(8)		ns
$t_{d(rdIH-a0)}$	Delay time, output read enable rfbi_rd high to output command/data control rfbi_a0 transition	I(9)		I(9)		ns
$t_{w(rdH)}$	Pulse duration, output read enable rfbi_rd high	J(10)		J(10)		ns
$t_{w(rdL)}$	Pulse duration, output read enable rfbi_rd low	K(11)		K(11)		ns
$t_{d(rdL-csxL)}$	Delay time, output read enable rfbi_rd low to output chip select rfbi_csx(14) low	L(12)		L(12)		ns
$t_{d(rdH-csxH)}$	Delay time, output read enable rfbi_rd high to output chip select rfbi_csx(14) high	M(13)		M(13)		ns

(1) A = (WECycleTime – WEOffTime) × (TimeParaGranularity + 1) × L4CLK
(2) B = (WEOffTime – WEOntime) × (TimeParaGranularity + 1) × L4CLK
(3) C = WEOnTime × (TimeParaGranularity + 1) × L4CLK
(4) D = (WECycleTime + CSPulseWidth – WEOffTime) × (TimeParaGranularity + 1) × L4CLK if mode Write to Read or Read to Write is enabled
(5) E = (WEOnTime – CSOnTime) × (TimeParaGranularity + 1) × L4CLK
(6) F = (CSOffTime – WEOffTime) × (TimeParaGranularity + 1) × L4CLK
(7) G = WECycleTime × (TimeParaGranularity + 1) × L4CLK
(8) H = REOnTime × (TimeParaGranularity + 1) × L4CLK
(9) I = (RECycleTime + CSPulseWidth – REOffTime) × (TimeParaGranularity + 1) × L4CLK if mode Write to Read or Read to Write is enabled
(10) J = (RECycleTime – REOffTime) × (TimeParaGranularity + 1) × L4CLK
(11) K = (REOffTime – REOntime) × (TimeParaGranularity + 1) × L4CLK
(12) L = (REOnTime – CSOnTime) × (TimeParaGranularity + 1) × L4CLK
(13) M = (CSOffTime – REOffTime) × (TimeParaGranularity + 1) × L4CLK
(14) In rfbi_csx, x is equal to 0 or 1.

Copyright © 2014–2019, Texas Instruments Incorporated

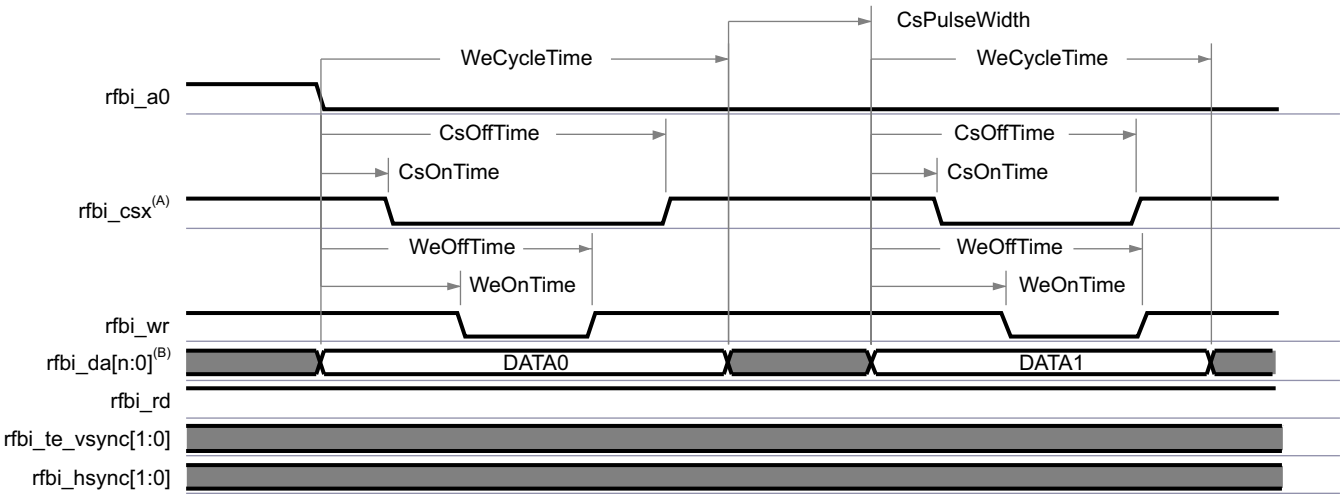

A. In rfbi_csx, x is equal to 0 or 1.
B. rfbi_da[n:0], n up to 15
C. For more information, see the DSS chapter in the *AM437x Sitara Processors Technical Reference Manual*.

Figure 5-95. DSS—RFBI Mode—MIPI DBI 2.0—LCD Panel—Command / Data Write

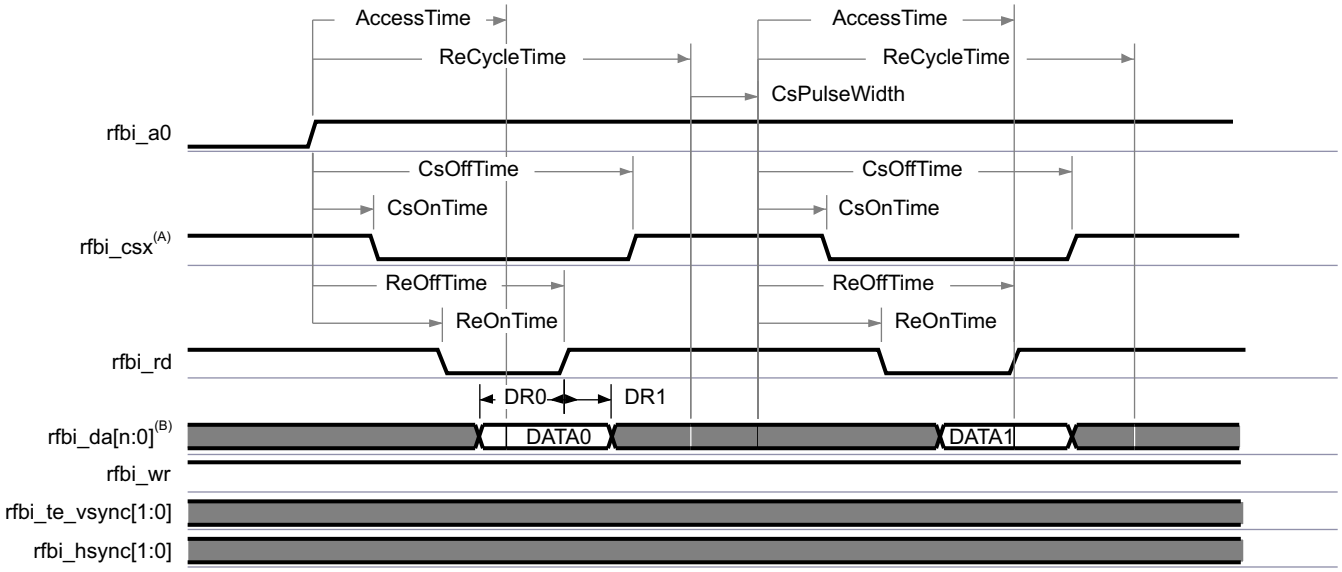

A. In rfbi_csx, x is equal to 0 or 1.
B. rfbi_da[n:0], n up to 15
C. For more information, see the DSS chapter in the *AM437x Sitara Processors Technical Reference Manual*.

Figure 5-96. DSS—RFBI Mode—MIPI DBI 2.0—LCD Panel—Command / Data Read

Copyright © 2014–2019, Texas Instruments Incorporated

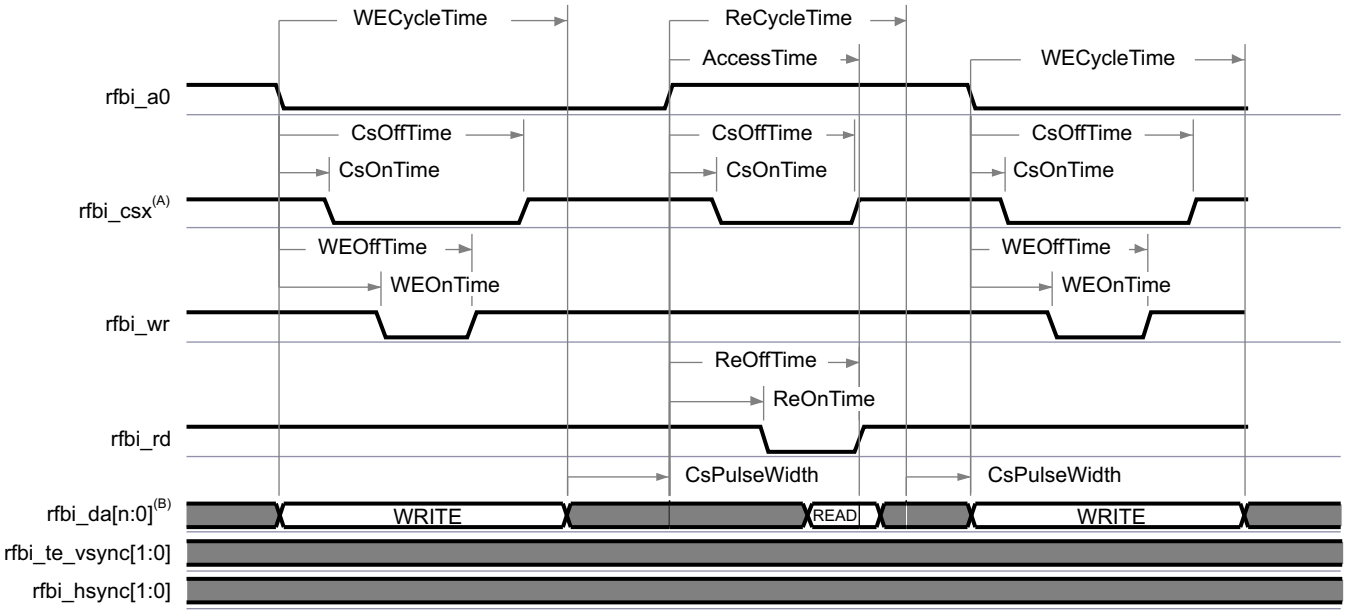

A. In rfbi_csx, x is equal to 0 or 1.
B. rfbi_da[n:0], n up to 15
C. For more information, see the DSS chapter in the *AM437x Sitara Processors Technical Reference Manual*.

Figure 5-97. DSS—RFBI Mode—MIPI DBI 2.0—LCD Panel—Command / Data Write to Read and Read to Write Modes

5.12.9.1.2.2 DSS—Parallel Interface—RFBI Mode—Pico DLP

The Remote Frame Buffer Interface (RFBI) module can provide also the necessary control signals and data to interface to the Pico DLP driver of the Pico DLP panel. Table 5-77 assumes testing over the recommended operating conditions and electrical characteristic conditions below (see Figure 5-98).

Table 5-77. DSS Timing Conditions—RFBI Mode—Pico DLP

TIMING CONDITION PARAMETER		VALUE		UNIT
		MIN	MAX	
Output Condition				
C_{LOAD}	Output load capacitance		5	pF

To use Pico DLP application, RFBI register must be configured as shown in Table 5-78:

Table 5-78. DSS Register Configuration—RFBI Mode—Pico DLP

DESCRIPTION	REGISTER AND BIT FIELD(1)	BIT	VALUES
Selection parallel mode	RFBI_CONFIGi and ParallelMode	[1:0]	0b11: 16-bit parallel output interface selected
Time Granularity (multiplies signal timing latencies by 2).	RFBI_CONFIGi andTimeGranularity	[4]	0b0: x2 latency disable
CS signal assertion time from Start Access Time	RFBI_ONOFF_TIMEi and CSOnTime	[3:0]	0b0000
CS signal deassertion time from Start Access Time	RFBI_ONOFF_TIMEi and CSOffTime	[9:4]	0b000100: 4 cycles
WE signal assertion time from Start Access Time	RFBI_ONOFF_TIMEi and WEOnTime	[13:10]	0b0000
WE signal deassertion time from Start Access Time	RFBI_ONOFF_TIMEi and WEOffTime	[19:14]	0b000010: 2 cycles
RE signal assertion time from Start Access Time	RFBI_ONOFF_TIMEi and REOnTime	[23:20]	0b0000

Table 5-78. DSS Register Configuration—RFBI Mode—Pico DLP (continued)

DESCRIPTION	REGISTER AND BIT FIELD[(1)]	BIT	VALUES
RE signal deassertion time from Start Access Time	RFBI_ONOFF_TIMEi and REOffTime	[29:24]	0b0000
Write cycle time	RFBI_CYCLE_TIMEi and WECycleTime	[5:0]	0b000100: 4 cycles
Read cycle time	RFBI_CYCLE_TIMEi and ReCycleTime	[11:6]	0b000000
CS pulse width	RFBI_CYCLE_TIMEi and CSPulseWidth	[17:12]	0b000000
Read to Write CS pulse width enable	RFBI_CYCLE_TIMEi and RWEnable	[18]	0b0
Read to Read CS pulse width enable	RFBI_CYCLE_TIMEi and RREnable	[19]	0b0
Write to Write CS pulse width enable	RFBI_CYCLE_TIMEi and WWEnable	[20]	0b0
Write to Read CS pulse width enable	RFBI_CYCLE_TIMEi and WREnable	[21]	0b0
From Start Access Time to CLK rising edge used for the first data capture	RFBI_CYCLE_TIMEi and AccessTime	[27:22]	0b000000

(1) i is equal to 0 or 1. For more information, see the DSS chapter in the *AM437x Sitara Processors Technical Reference Manual*.

Copyright © 2014–2019, Texas Instruments Incorporated

Table 5-79. DSS Switching Characteristics—RFBI Mode—Pico DLP[1][2][3]

PARAMETER		OPP100		OPP50		UNIT
		MIN	MAX	MIN	MAX	
$t_{w(wrH)}$	Pulse duration, output write enable rfbi_wr high	A[4]		A[4]		ns
$t_{w(wrL)}$	Pulse duration, output write enable rfbi_wr low	B[5]		B[5]		ns
$t_{d(a0\text{-}wrL)}$	Delay time, output command/data control rfbi_a0 transition to output write enable rfbi_wr low	C[6]		C[6]		ns
$t_{d(wrH\text{-}a0)}$	Delay time, output write enable rfbi_wr high to output command/data control rfbi_a0 transition	D[7]		D[7]		ns
$t_{d(csx\text{-}wrL)}$	Delay time, output chip select rfbi_csx[8] low to output write enable rfbi_wr low	E[9]		E[9]		ns
$t_{d(wrH\text{-}csxH)}$	Delay time, output write enable rfbi_wr high to output chip select rfbi_csx[8] high	F[10]		F[10]		ns
$t_{d(dataV)}$	Output data rfbi_da[15:0][11] valid	G[12]		G[12]		ns
$t_{d(Skew)}$	Skew between output write enable falling rfbi_wr and output data rfbi_da[15:0][11] high or low	15.5		15.5		ns
$t_{d(a0H\text{-}rdL)}$	Delay time, output command/data control rfbi_a0 high to output read enable rfbi_rd low	H[13]		H[13]		ns
$t_{d(rdlH\text{-}a0)}$	Delay time, output read enable rfbi_rd high to output command/data control rfbi_a0 transition	I[14]		I[14]		ns
$t_{w(rdH)}$	Pulse duration, output read enable rfbi_rd high	J[15]		J[15]		ns
$t_{w(rdL)}$	Pulse duration, output read enable rfbi_rd low	K[16]		K[16]		ns
$t_{d(rdL\text{-}csxL)}$	Delay time, output read enable rfbi_rd low to output chip select rfbi_csx[8] low	L[17]		L[17]		ns
$t_{d(rdL\text{-}csxH)}$	Delay time, output read enable rfbi_rd low to output chip select rfbi_csx[8] high	M[18]		M[18]		ns
CsOnTime	CS signal assertion time from Start Access Time – RFBI_ONOFF_TIMEi Register	0[19]				ns
CsOffTime	CS signal deassertion time from Start Access Time – RFBI_ONOFF_TIMEi Register	40[19]				ns
WeOnTime	WE signal assertion time from Start Access Time – RFBI_ONOFF_TIMEi Register	0[19]				ns
WeOffTime	WE signal deassertion time from Start Access Time – RFBI_ONOFF_TIMEi Register	20[19]				ns
ReOnTime	RE signal assertion time from Start Access Time – RFBI_ONOFF_TIMEi Register	-				ns
ReOffTime	RE signal deassertion time from Start Access Time – RFBI_ONOFF_TIMEi Register	-				ns
WeCycleTime	Write cycle time – RFBI_CYCLE_TIMEi Register	40[19]				ns
ReCycleTime	Read cycle time – RFBI_CYCLE_TIMEi Register	-				ns
CsPulseWidth	CS pulse width – RFBI_CYCLE_TIMEi Register	0[19]				ns

(1) See DM Operating Condition Addendum for OPP voltages.
(2) At OPP100, L4 clock is 100 MHz and at OPP50, L4 clock is 50 MHz.
(3) rfbi_wr must be at 25 MHz.
(4) A = (WECycleTime – WEOffTime) × (TimeParaGranularity + 1) × L4CLK
(5) B = (WEOffTime – WEOntime) × (TimeParaGranularity + 1) × L4CLK
(6) C = WEOnTime × (TimeParaGranularity + 1) × L4CLK
(7) D = (WECycleTime + CSPulseWidth – WEOffTime) × (TimeParaGranularity + 1) × L4CLK if mode Write to Read or Read to Write is enabled.
(8) In rfbi_csx, x is equal to 0 or 1.
(9) E = (WEOnTime – CSOnTime) × (TimeParaGranularity + 1) × L4CLK
(10) F = (CSOffTime – WEOffTime) × (TimeParaGranularity + 1) × L4CLK
(11) 16-bit parallel output interface is selected in DSS register.
(12) G = WECycleTime × (TimeParaGranularity + 1) × L4CLK
(13) H = REOnTime × (TimeParaGranularity + 1) × L4CLK

Copyright © 2014–2019, Texas Instruments Incorporated

(14) I = (RECycleTime + CSPulseWidth – REOffTime) × (TimeParaGranularity + 1) × L4CLK if mode Write to Read or Read to Write is enabled.

(15) J = (RECycleTime – REOffTime) × (TimeParaGranularity + 1) × L4CLK

(16) K = (REOffTime – REOntime) × (TimeParaGranularity + 1) × L4CLK

(17) L = (REOnTime – CSOnTime) × (TimeParaGranularity + 1) × L4CLK

(18) M = (CSOffTime – REOffTime) × (TimeParaGranularity + 1) × L4CLK

(19) These values are calculated by the following formula: RFBI Register (Value) × L4 Clock (ns).

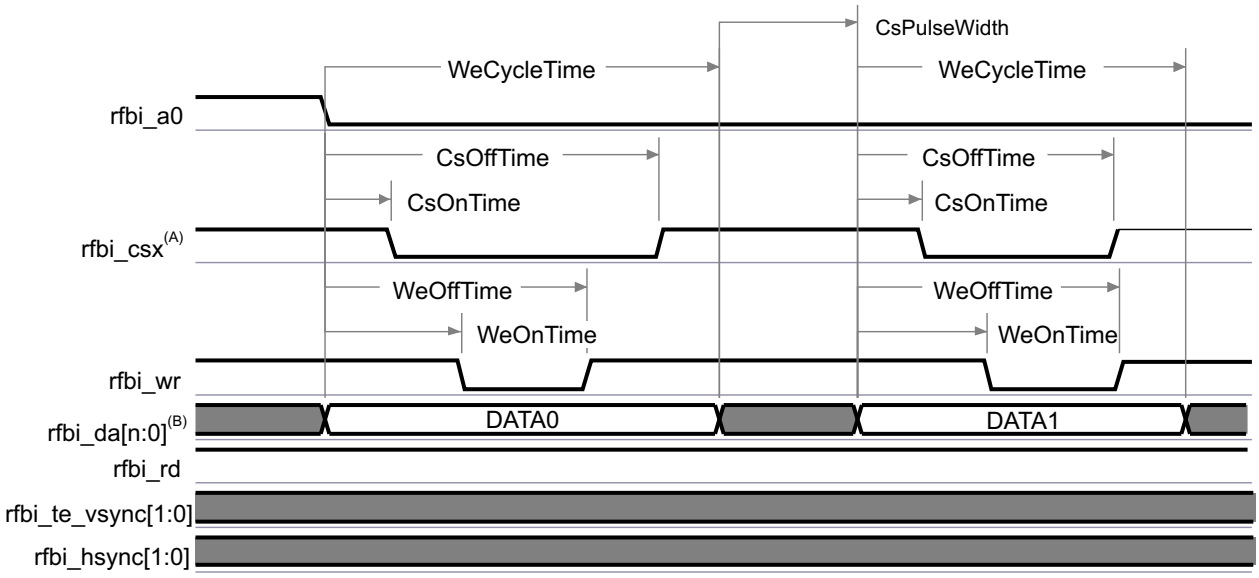

A. In rfbi_csx, x is equal to 0 or 1.
B. rfbi_da[n:0], n up to 15

Figure 5-98. DSS—RFBI Mode—Pico DLP—Command / Data Write

5.12.10 Camera (VPFE)

The camera (VPFE) controller receives input video/image data from external capture devices and stores it to external memory which is transferred into the external memory via a built-in DMA engine. An internal buffer block provides a high bandwidth path between the module and the external memory. The Cortex-A9 will process the image data based on application requirements.

5.12.10.1 Camera (VPFE) Timing

The following tables assume testing over recommended operating conditions.

Table 5-80. VPFE Timing Requirements

NO.			1.8 V, 3.3 V				UNIT
			OPP50		OPP100		
			MIN	MAX	MIN	MAX	
VF1	$t_{c(CAMx_CLK)}$	Cycle time, pixel clock input, CAMx_CLK	20		13.3		ns
VF2	$t_{su(CAMx_D-CAMx_CLK)}$	Setup time, CAMx_D to CAMx_CLK rising edge	7.5		3.5		ns
VF3	$t_{su(CAMx_HD-CAMx_CLK)}$	Setup time, CAMx_HD to CAMx_CLK rising edge	7.5		3.5		ns
VF4	$t_{su(CAMx_VD-CAMx_CLK)}$	Setup time, CAMx_VD to CAMx_CLK rising edge	7.5		3.5		ns
VF5	$t_{su(CAMx_WEN-CAMx_CLK)}$	Setup time, CAMx_WEN to CAMx_CLK rising edge	7.5		3.5		ns
VF6	$t_{su(C_FLD-CAMx_CLK)}$	Setup time, CAMx_FIELD to CAMx_CLK rising edge	7.5		3.5		ns

Copyright © 2014–2019, Texas Instruments Incorporated

Table 5-80. VPFE Timing Requirements (continued)

NO.			1.8 V, 3.3 V				UNIT
			OPP50		OPP100		
			MIN	MAX	MIN	MAX	
VF7	$t_{h(CAMx_CLK-CAMx_D)}$	Hold time, CAMx_D valid after CAMx_CLK rising edge	6.5		2.5		ns
VF8	$t_{h(VDIN-HD-CAMx_CLK)}$	Hold time, CAMx_HD to CAMx_CLK rising edge	6.5		2.5		ns
VF9	$t_{h(CAMx_VD-CAMx_CLK)}$	Hold time, CAMx_VD to CAMx_CLK rising edge	6.5		2.5		ns
VF10	$t_{h(CAMx_WEN-CAMx_CLK)}$	Hold time, CAMx_WEN to CAMx_CLK rising edge	6.5		2.5		ns
VF11	$t_{h(C_FLD-CAMx_CLK)}$	Hold time, CAMx_FIELD to CAMx_CLK rising edge	6.5		2.5		ns

Table 5-81. VPFE Output Switching Characteristics

NO.	PARAMETER		1.8 V, 3.3 V				UNIT
			OPP50		OPP100		
			MIN	MAX	MIN	MAX	
VF12	$t_{d(CAMx_HD-CAMx_CLK)}$	Output delay time, CAMx_HD to CLK rising edge	9	15	2	9	ns
VF13	$t_{d(CAMx_VD-CAMx_CLK)}$	Output delay time, CAMx_VD to CLK rising edge	9	15	2	9	ns
VF14	$t_{d(CAMx_WEN-CAMx_CLK)}$	Output delay time, CAMx_WEN to CLK rising edge	9	15	2	9	ns

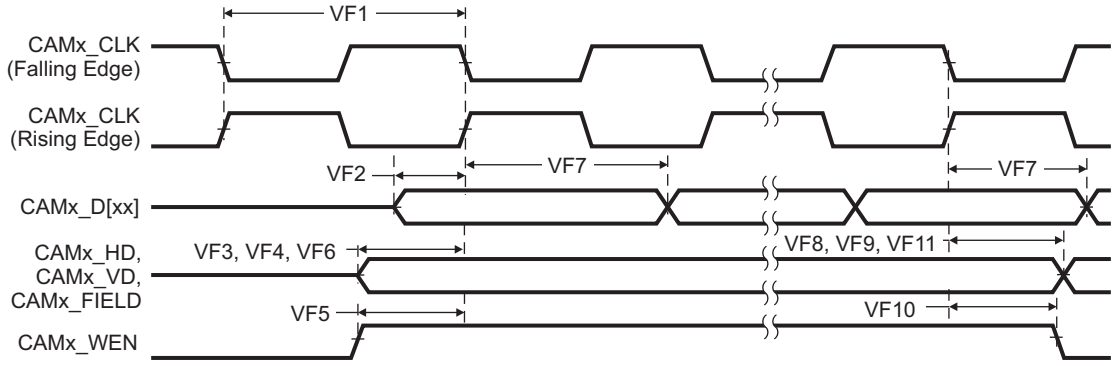

Figure 5-99. Camera Input Timings

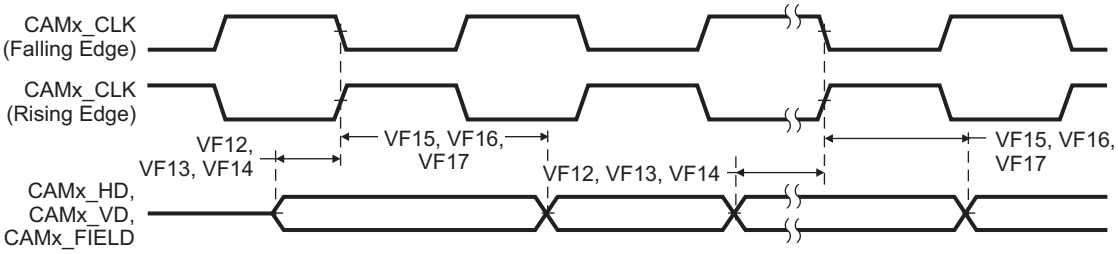

Figure 5-100. Camera Output Timings

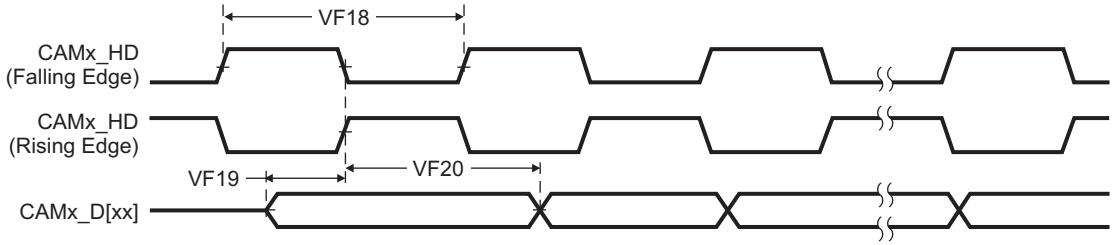

Figure 5-101. Camera Input Timings With VDIN0_HD as Pixel Clock

Copyright © 2014–2019, Texas Instruments Incorporated

5.12.11 Inter-Integrated Circuit (I^2C)

For more information, see the Inter-Integrated Circuit (I^2C) section of the *AM437x ARM Cortex-A9 Microprocessors (MPUs) Technical Reference Manual*.

5.12.11.1 I2C Electrical Data and Timing

Table 5-82. I2C Timing Conditions - Slave Mode

TIMING CONDITION PARAMETER		STANDARD MODE		FAST MODE		UNIT
		MIN	MAX	MIN	MAX	
Output Condition						
C_b	Capacitive load for each bus line		400		400	pF

Table 5-83. Timing Requirements for I2C Input Timings

(see Figure 5-102)

NO.			STANDARD MODE		FAST MODE		UNIT
			MIN	MAX	MIN	MAX	
1	$t_{c(SCL)}$	Cycle time, SCL	10		2.5		us
2	$t_{su(SCLH-SDAL)}$	Setup Time, SCL high before SDA low (for a repeated START condition)	4.7		0.6		us
3	$t_{h(SDAL-SCLL)}$	Hold time, SCL low after SDA low (for a START and a repeated START condition)	4		0.6		us
4	$t_{w(SCLL)}$	Pulse duration, SCL low	4.7		1.3		us
5	$t_{w(SCLH)}$	Pulse duration, SCL high	4		0.6		us
6	$t_{su(SDAV-SCLH)}$	Setup time, SDA valid before SCL high	250		100(1)		ns
7	$t_{h(SCLL-SDAV)}$	Hold time, SDA valid after SCL low	0(2)	3.45(3)	0(2)	0.9(3)	us
8	$t_{w(SDAH)}$	Pulse duration, SDA high between STOP and START conditions	4.7		1.3		us
9	$t_{r(SDA)}$	Rise time, SDA		1000		300	ns
10	$t_{r(SCL)}$	Rise time, SCL		1000		300	ns
11	$t_{f(SDA)}$	Fall time, SDA		300		300	ns
12	$t_{f(SCL)}$	Fall time, SCL		300		300	ns
13	$t_{su(SCLH-SDAH)}$	Setup time, high before SDA high (for STOP condition)	4		0.6		us
14	$t_{w(SP)}$	Pulse duration, spike (must be suppressed)	0	50	0	50	ns

(1) A fast-mode I2C-bus™ device can be used in a standard-mode I2C-bus system, but the requirement $t_{su(SDA-SCLH)} \geq 250$ ns must then be met. This is automatically the case if the device does not stretch the LOW period of the SCL signal. If such a device stretches the LOW period of the SCL signal, it must output the next data bit to the SDA line $t_{r\ max} + t_{su(SDA-SCLH)} = 1000 + 250 = 1250$ ns (according to the standard-mode I2C-Bus Specification) before the SCL line is released.

(2) A device must internally provide a hold time of at least 300 ns for the SDA signal (referred to the V_{IHmin} of the SCL signal) to bridge the undefined region of the falling edge of SCL.

(3) The maximum $t_{h(SDA-SCLL)}$ has only to be met if the device does not stretch the low period [$t_{w(SCLL)}$] of the SCL signal.

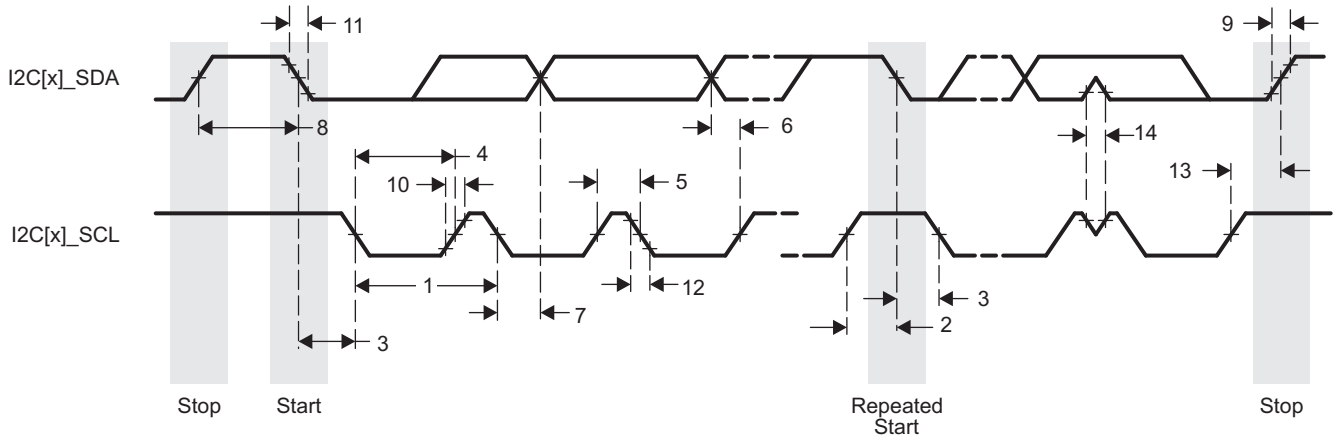

Figure 5-102. I2C Receive Timing

Table 5-84. Switching Characteristics for I2C Output Timings

(see Figure 5-103)

NO.	PARAMETER		STANDARD MODE		FAST MODE		UNIT
			MIN	MAX	MIN	MAX	
15	$t_{c(SCL)}$	Cycle time, SCL	10		2.5		us
16	$t_{su(SCLH-SDAL)}$	Setup Time, SCL high before SDA low (for a repeated START condition)	4.7		0.6		us
17	$t_{h(SDAL-SCLL)}$	Hold time, SCL low after SDA low (for a START and a repeated START condition)	4		0.6		us
18	$t_{w(SCLL)}$	Pulse duration, SCL low	4.7		1.3		us
19	$t_{w(SCLH)}$	Pulse duration, SCL high	4		0.6		us
20	$t_{su(SDAV-SCLH)}$	Setup time, SDA valid before SCL high	250		100		ns
21	$t_{h(SCLL-SDAV)}$	Hold time, SDA valid after SCL low	0	3.45	0	0.9	us
22	$t_{w(SDAH)}$	Pulse duration, SDA high between STOP and START conditions	4.7		1.3		us
27	$t_{su(SCLH-SDAH)}$	Setup time, high before SDA high (for STOP condition)	4		0.6		us

(1) Cb is line load in pF.

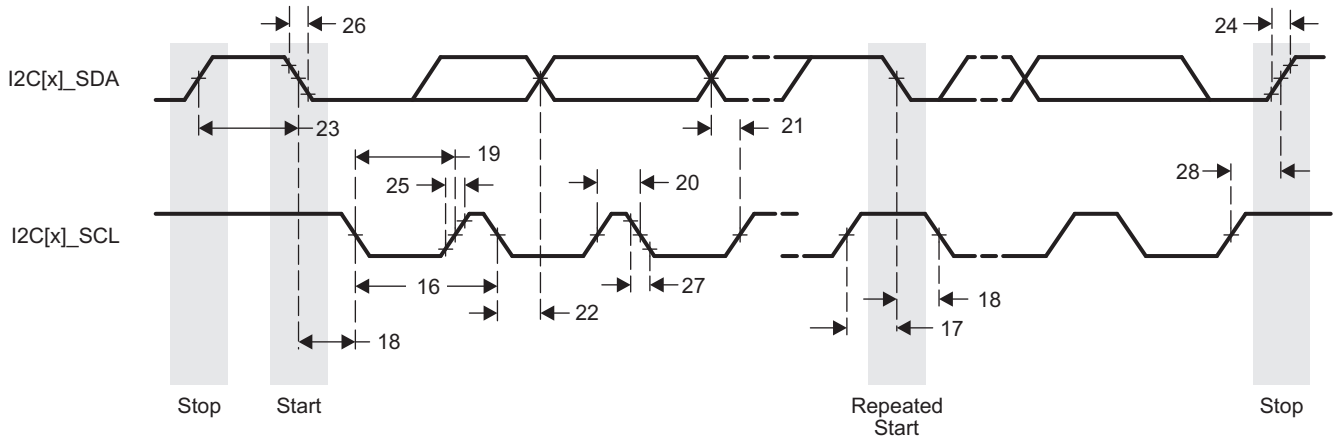

Figure 5-103. I2C Transmit Timing

Copyright © 2014–2019, Texas Instruments Incorporated

5.12.12 Multichannel Audio Serial Port (McASP)

The multichannel audio serial port (McASP) functions as a general-purpose audio serial port optimized for the needs of multichannel audio applications. The McASP is useful for time-division multiplexed (TDM) stream, Inter-Integrated Sound (I2S) protocols, and inter-component digital audio interface transmission (DIT).

5.12.12.1 McASP Device-Specific Information

The device includes two multichannel audio serial port (McASP) interface peripherals (McASP0 and McASP1). The McASP module consists of a transmit and receive section. These sections can operate completely independently with different data formats, separate master clocks, bit clocks, and frame syncs or, alternatively, the transmit and receive sections may be synchronized. The McASP module also includes shift registers that may be configured to operate as either transmit data or receive data.

The transmit section of the McASP can transmit data in either a time-division-multiplexed (TDM) synchronous serial format or in a DIT format where the bit stream is encoded for SPDIF, AES-3, IEC-60958, CP-430 transmission. The receive section of the McASP peripheral supports the TDM synchronous serial format.

The McASP module can support one transmit data format (either a TDM format or DIT format) and one receive format at a time. All transmit shift registers use the same format and all receive shift registers use the same format; however, the transmit and receive formats need not be the same. Both the transmit and receive sections of the McASP also support burst mode, which is useful for nonaudio data (for example, passing control information between two devices).

The McASP peripheral has additional capability for flexible clock generation and error detection/handling, as well as error management.

The device McASP0 and McASP1 modules have up to four serial data pins each. The McASP FIFO size is 256 bytes and two DMA and two interrupt requests are supported. Buffers are used transparently to better manage DMA, which can be leveraged to manage data flow more efficiently.

For more detailed information on and the functionality of the McASP peripheral, see the Multichannel Audio Serial Port (McASP) section of the *AM437x ARM Cortex-A9 Microprocessors (MPUs) Technical Reference Manual*.

5.12.12.2 McASP Electrical Data and Timing

Table 5-85. McASP Timing Conditions

TIMING CONDITION PARAMETER		MIN	TYP	MAX	UNIT
Input Conditions					
t_R	Input signal rise time	1[(1)]		4[(1)]	ns
t_F	Input signal fall time	1[(1)]		4[(1)]	ns
Output Condition					
C_{LOAD}	Output load capacitance	15		30	pF

(1) Except when specified otherwise.

Table 5-86. Timing Requirements for McASP[(1)]

(see Figure 5-104)

NO.				OPP100		OPP50		UNIT
				MIN	MAX	MIN	MAX	
1	$t_{c(AHCLKRX)}$	Cycle time, McASP[x]_AHCLKR and McASP[x]_AHCLKX		20		38.46		ns
2	$t_{w(AHCLKRX)}$	Pulse duration, McASP[x]_AHCLKR and McASP[x]_AHCLKX high or low		0.5P - 2.5[(2)]		0.5P - 2.5[(2)]		ns
3	$t_{c(ACLKRX)}$	Cycle time, McASP[x]_ACLKR and McASP[x]_ACLKX		20		38.46		ns
4	$t_{w(ACLKRX)}$	Pulse duration, McASP[x]_ACLKR and McASP[x]_ACLKX high or low		0.5R - 2.5[(3)]		0.5R - 2.5[(3)]		ns
5	$t_{su(AFSRX-ACLKRX)}$	Setup time, McASP[x]_AFSR and McASP[x]_AFSX input valid before McASP[x]_ACLKR and McASP[x]_ACLKX	ACLKR and ACLKX int	12.3		15.5		ns
			ACLKR and ACLKX ext in	4		6		
			ACLKR and ACLKX ext out	4		6		
6	$t_{h(ACLKRX-AFSRX)}$	Hold time, McASP[x]_AFSR and McASP[x]_AFSX input valid after McASP[x]_ACLKR and McASP[x]_ACLKX	ACLKR and ACLKX int	-1		-1		ns
			ACLKR and ACLKX ext in	1.6		2.3		
			ACLKR and ACLKX ext out	1.6		2.3		
7	$t_{su(AXR-ACLKRX)}$	Setup time, McASP[x]_AXR input valid before McASP[x]_ACLKR and McASP[x]_ACLKX	ACLKR and ACLKX int	12.3		15.5		ns
			ACLKR and ACLKX ext in	4		6		
			ACLKR and ACLKX ext out	4		6		
8	$t_{h(ACLKRX-AXR)}$	Hold time, McASP[x]_AXR input valid after McASP[x]_ACLKR and McASP[x]_ACLKX	ACLKR and ACLKX int	-1		-1		ns
			ACLKR and ACLKX ext in	1.6		2.3		
			ACLKR and ACLKX ext out	1.6		2.3		

(1) ACLKR internal: ACLKRCTL.CLKRM = 1, PDIR.ACLKR = 1
ACLKR external input: ACLKRCTL.CLKRM = 0, PDIR.ACLKR = 0
ACLKR external output: ACLKRCTL.CLKRM = 0, PDIR.ACLKR=1
ACLKX internal: ACLKXCTL.CLKXM = 1, PDIR.ACLKX = 1
ACLKX external input: ACLKXCTL.CLKXM = 0, PDIR.ACLKX = 0
ACLKX external output: ACLKXCTL.CLKXM = 0, PDIR.ACLKX = 1

(2) P = McASP[x]_AHCLKR and McASP[x]_AHCLKX period in nano seconds (ns).

(3) R = McASP[x]_ACLKR and McASP[x]_ACLKX period in ns.

Copyright © 2014–2019, Texas Instruments Incorporated

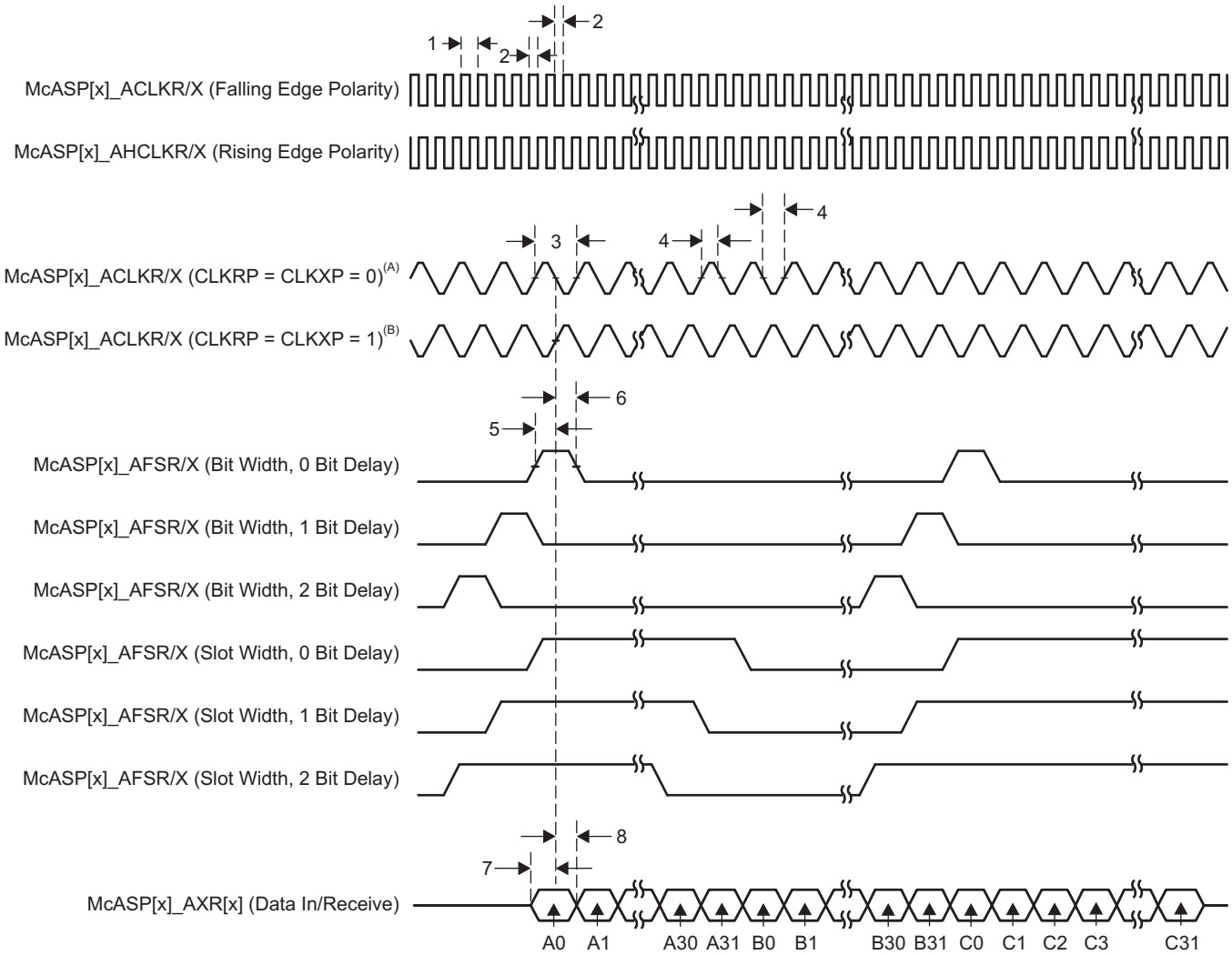

A. For CLKRP = CLKXP = 0, the McASP transmitter is configured for rising edge (to shift data out) and the McASP receiver is configured for falling edge (to shift data in).

B. For CLKRP = CLKXP = 1, the McASP transmitter is configured for falling edge (to shift data out) and the McASP receiver is configured for rising edge (to shift data in).

Figure 5-104. McASP Input Timing

Table 5-87. Switching Characteristics for McASP[(1)]

(see Figure 5-105)

NO.				OPP100		OPP50		UNIT
				MIN	MAX	MIN	MAX	
9	$t_{c(AHCLKRX)}$	Cycle time, McASP[x]_AHCLKR and McASP[x]_AHCLKX		20[(2)]		38.46		ns
10	$t_{w(AHCLKRX)}$	Pulse duration, McASP[x]_AHCLKR and McASP[x]_AHCLKX high or low		0.5P - 2.5[(3)]		0.5P - 2.5[(3)]		ns
11	$t_{c(ACLKRX)}$	Cycle time, McASP[x]_ACLKR and McASP[x]_ACLKX		20		38.46		ns
12	$t_{w(ACLKRX)}$	Pulse duration, McASP[x]_ACLKR and McASP[x]_ACLKX high or low		0.5P - 2.5[(3)]		0.5P - 2.5[(3)]		ns
13	$t_{d(ACLKRX-AFSRX)}$	Delay time, McASP[x]_ACLKR and McASP[x]_ACLKX transmit edge to McASP[x]_AFSR and McASP[x]_AFSX output valid	ACLKR and ACLKX int	0	7.25	0	8.5	ns
			ACLKR and ACLKX ext in	2	14	2.7	18	
		Delay time, McASP[x]_ACLKR and McASP[x]_ACLKX transmit edge to McASP[x]_AFSR and McASP[x]_AFSX output valid with Pad Loopback	ACLKR and ACLKX ext out	2	14	2.7	18	
14	$t_{d(ACLKX-AXR)}$	Delay time, McASP[x]_ACLKX transmit edge to McASP[x]_AXR output valid	ACLKX int	0	7.25	0	8.5	ns
			ACLKX ext in	2	14	2.7	18	
		Delay time, McASP[x]_ACLKX transmit edge to McASP[x]_AXR output valid with Pad Loopback	ACLKX ext out	2	14	2.7	18	
15	$t_{dis(ACLKX-AXR)}$	Disable time, McASP[x]_ACLKX transmit edge to McASP[x]_AXR output high impedance	ACLKX int	0	7.25	0	8.5	ns
			ACLKX ext in	2	14	2.7	18	
		Disable time, McASP[x]_ACLKX transmit edge to McASP[x]_AXR output high impedance with Pad Loopback	ACLKX ext out	2	14	2.7	18	

(1) ACLKR internal: ACLKRCTL.CLKRM = 1, PDIR.ACLKR = 1
ACLKR external input: ACLKRCTL.CLKRM = 0, PDIR.ACLKR = 0
ACLKR external output: ACLKRCTL.CLKRM = 0, PDIR.ACLKR = 1
ACLKX internal: ACLKXCTL.CLKXM = 1, PDIR.ACLKX = 1
ACLKX external input: ACLKXCTL.CLKXM = 0, PDIR.ACLKX = 0
ACLKX external output: ACLKXCTL.CLKXM = 0, PDIR.ACLKX = 1

(2) 50 MHz

(3) P = AHCLKR and AHCLKX period.

Copyright © 2014–2019, Texas Instruments Incorporated

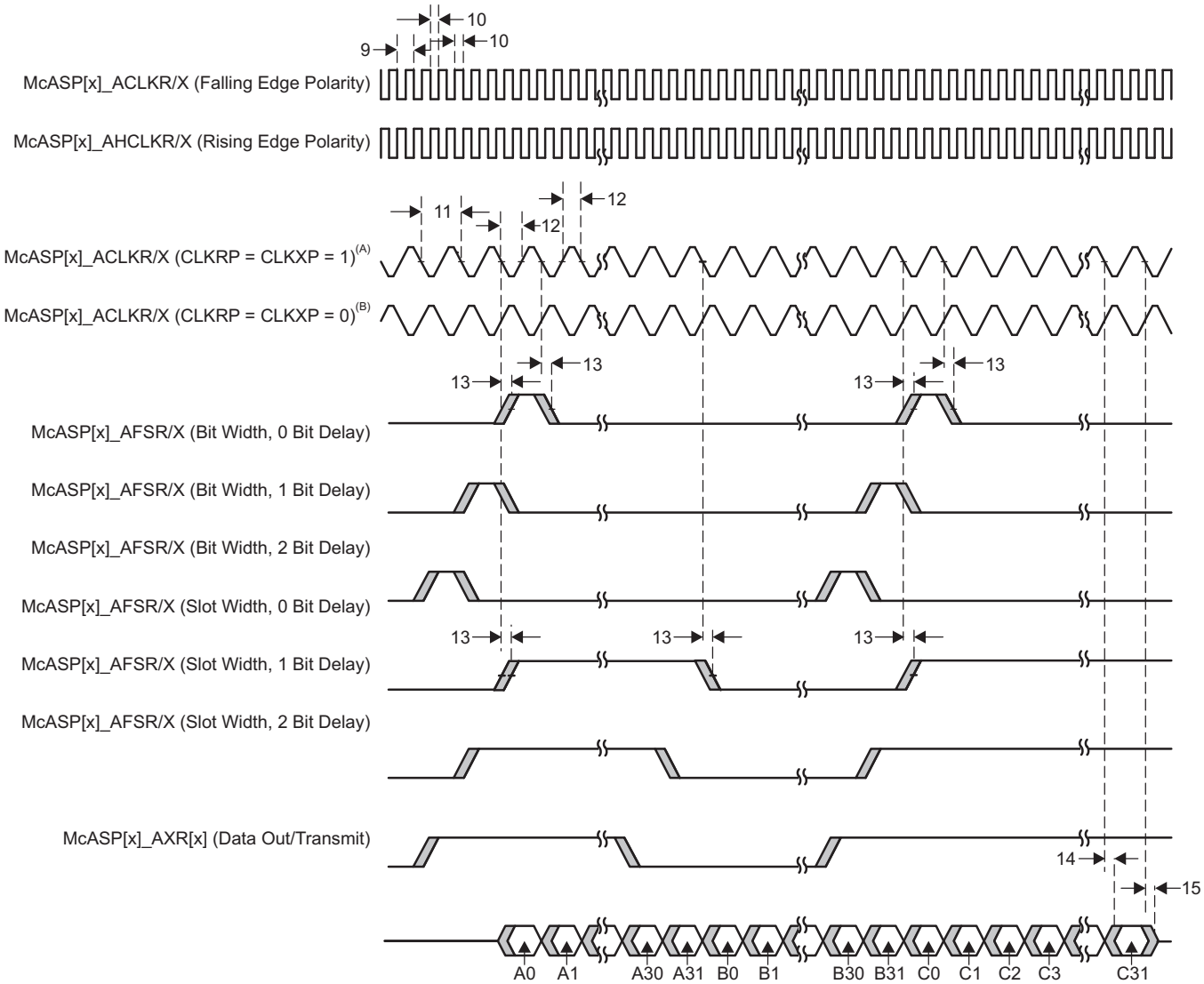

A. For CLKRP = CLKXP = 1, the McASP transmitter is configured for falling edge (to shift data out) and the McASP receiver is configured for rising edge (to shift data in).

B. For CLKRP = CLKXP = 0, the McASP transmitter is configured for rising edge (to shift data out) and the McASP receiver is configured for falling edge (to shift data in).

Figure 5-105. McASP Output Timing

5.12.13 Multichannel Serial Port Interface (McSPI)

For more information, see the Multichannel Serial Port Interface (McSPI) section of the *AM437x ARM Cortex-A9 Microprocessors (MPUs) Technical Reference Manual*.

5.12.13.1 McSPI Electrical Data and Timing

The following timings are applicable to the different configurations of McSPI in master or slave mode for any McSPI and any channel (n).

5.12.13.1.1 McSPI—Slave Mode

Table 5-88. McSPI Timing Conditions—Slave Mode

TIMING CONDITION PARAMETER		MIN	MAX	UNIT
Input Conditions				
t_r	Input signal rise time		5	ns
t_f	Input signal fall time		5	ns
Output Condition				
C_{load}	Output load capacitance		20	pF

Table 5-89. Timing Requirements for McSPI Input Timings—Slave Mode

(see Figure 5-106)

NO.			OPP100		OPP50		UNIT
			MIN	MAX	MIN	MAX	
1	$t_{c(SPICLK)}$	Cycle time, SPI_CLK	62.5		83.2		ns
2	$t_{w(SPICLKL)}$	Typical Pulse duration, SPI_CLK low	0.45P(1)	0.45P(1)	0.45P(1)	0.45P(1)	ns
3	$t_{w(SPICLKH)}$	Typical Pulse duration, SPI_CLK high	0.45P(1)	0.45P(1)	0.45P(1)	0.45P(1)	ns
4	$t_{su(SIMO-SPICLK)}$	Setup time, SPI_D[x] (SIMO) valid before SPI_CLK active edge(2)(3)	12		13		ns
5	$t_{h(SPICLK-SIMO)}$	Hold time, SPI_D[x] (SIMO) valid after SPI_CLK active edge(2)(3)	12		13		ns
8	$t_{su(CS-SPICLK)}$	Setup time, SPI_CS valid before SPI_CLK first edge(2)	12		13		ns
9	$t_{h(SPICLK-CS)}$	Hold time, SPI_CS valid after SPI_CLK last edge(2)	12		13		ns

(1) P = SPI_CLK period.

(2) This timing applies to all configurations regardless of MCSPIX_CLK polarity and which clock edges are used to drive output data and capture input data.

(3) Pins SPIx_D0 and SPIx_D1 can function as SIMO or SOMI.

Table 5-90. Switching Characteristics for McSPI Output Timings—Slave Mode

(see Figure 5-107)

NO.	PARAMETER		OPP100		OPP50		UNIT
			MIN	MAX	MIN	MAX	
6	$t_{d(SPICLK-SOMI)}$	Delay time, SPI_CLK active edge to SPI_D[x] (SOMI) transition(1)(2)		17	0	19	ns
7	$t_{d(CS-SOMI)}$	Delay time, SPI_CS active edge to SPI_D[x] (SOMI) transition(2)		26		29	ns

(1) This timing applies to all configurations regardless of MCSPIX_CLK polarity and which clock edges are used to drive output data and capture input data.

(2) Pins SPIx_D0 and SPIx_D1 can function as SIMO or SOMI.

Copyright © 2014–2019, Texas Instruments Incorporated

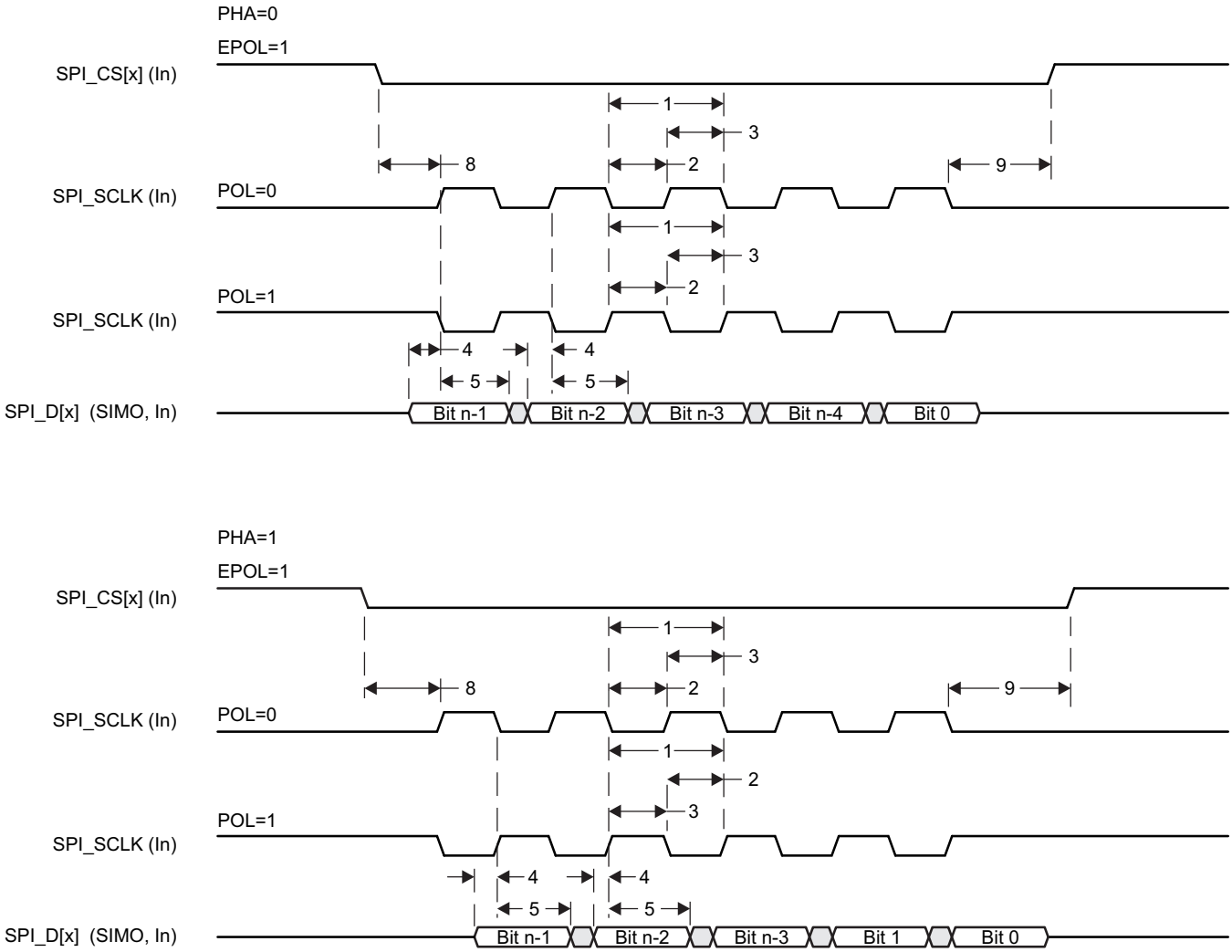

Figure 5-106. SPI Slave Mode Receive Timing

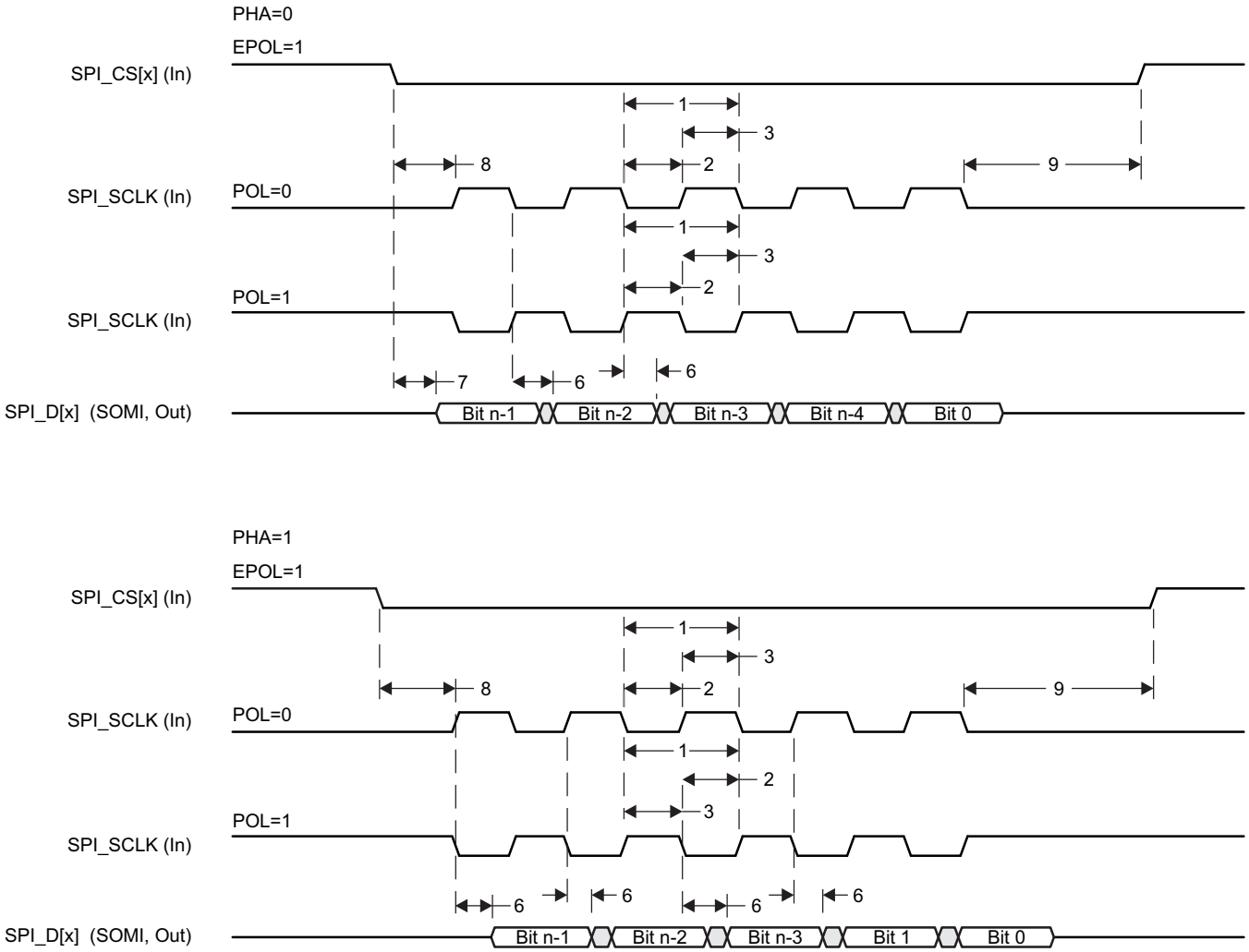

Figure 5-107. SPI Slave Mode Transmit Timing

Copyright © 2014–2019, Texas Instruments Incorporated

5.12.13.1.2 McSPI—Master Mode

Table 5-91. McSPI Timing Conditions—Master Mode

TIMING CONDITION PARAMETER		LOW LOAD		HIGH LOAD		UNIT
		MIN	MAX	MIN	MAX	
Input Conditions						
t_r	Input signal rise time		4		8	ns
t_f	Input signal fall time		4		8	ns
Output Condition						
C_{load}	Output load capacitance		5		25	pF

Table 5-92. Timing Requirements for McSPI Input Timings—Master Mode

(see Figure 5-108)

NO.			OPP100				OPP50				UNIT
			LOW LOAD		HIGH LOAD		LOW LOAD		HIGH LOAD		
			MIN	MAX	MIN	MAX	MIN	MAX	MIN	MAX	
4	$t_{su(SOMI-SPICLK)}$[1]	Setup time, SPI_D[x] (SOMI) valid before SPI_CLK active edge[2]	3		4.5		4.5		4.5		ns
5	$t_{h(SPICLK-SOMI)}$[1]	Hold time, SPI_D[x] (SOMI) valid after SPI_CLK active edge[2]	6		6		6		6		ns

(1) This timing applies to all configurations regardless of MCSPIX_CLK polarity and which clock edges are used to capture input data.

(2) Pins SPIx_D0 and SPIx_D1 can function as SIMO or SOMI.

Table 5-93. Switching Characteristics for McSPI Output Timings—Master Mode

(see Figure 5-109)

NO.	PARAMETER			OPP100				OPP50				UNIT
				LOW LOAD		HIGH LOAD		LOW LOAD		HIGH LOAD		
				MIN	MAX	MIN	MAX	MIN	MAX	MIN	MAX	
1	$t_{c(SPICLK)}$	Cycle time, SPI_CLK		20.8		41.6		41.6		41.6		ns
2	$t_{w(SPICLKL)}$	Typical Pulse duration, SPI_CLK low		0.45P[1]	0.45P[1]	0.45P[1]	0.55P[1]	0.45P[1]	0.45P[1]	0.45P[1]	0.45P[1]	ns
3	$t_{w(SPICLKH)}$	Typical Pulse duration, SPI_CLK high		0.45P[1]	0.45P[1]	0.45P[1]	0.55P[1]	0.45P[1]	0.45P[1]	0.45P[1]	0.45P[1]	ns
6	$t_{d(SPICLK-SIMO)}$	Delay time, SPI_CLK active edge to SPI_D[x] (SIMO) transition[2]		-1	4.5	-1	6.5	0	6.5	0	6.5	ns
7	$t_{d(CS-SIMO)}$	Delay time, SPI_CS active edge to SPI_D[x] (SIMO) transition[2]			4.5		6.5		6.5		6.5	ns
8	$t_{d(CS-SPICLK)}$	Delay time, SPI_CS active to SPI_CLK first edge	Mode 1 and 3[3]	A - 4.2[4]		A - 4.2[4]		A - 5.2[4]		A - 5.2[4]		ns
			Mode 0 and 2[3]	B - 4.2[5]		B - 4.2[5]		B - 5.2[5]		B - 5.2[5]		ns
9	$t_{d(SPICLK-CS)}$	Delay time, SPI_CLK last edge to SPI_CS inactive	Mode 1 and 3[3]	B - 4.2[5]		B - 4.2[5]		B - 5.2[5]		B - 5.2[5]		ns
			Mode 0 and 2[3]	A - 4.2[4]		A - 4.2[4]		A - 5.2[4]		A - 5.2[4]		ns

(1) P = SPI_CLK period.

(2) Pins SPIx_D0 and SPIx_D1 can function as SIMO or SOMI.

(3) The polarity of SPIx_CLK and the active edge (rising or falling) on which mcspix_simo is driven and mcspix_somi is latched is all software configurable:

- SPIx_CLK(1) phase programmable with the bit PHA of MCSPI_CH(i)CONF register: PHA = 1 (Modes 1 and 3).
- SPIx_CLK(1) phase programmable with the bit PHA of MCSPI_CH(i)CONF register: PHA = 0 (Modes 0 and 2).

(4) Case P = 20.8 ns, A = (TCS+1)*TSPICLKREF (TCS is a bit field of MCSPI_CH(i)CONF register).
Case P > 20.8 ns, A = (TCS+0.5)*Fratio*TSPICLKREF (TCS is a bit field of MCSPI_CH(i)CONF register).

Note: P = SPI_CLK clock period.

(5) B = (TCS+0.5)*TSPICLKREF*Fratio (TCS is a bit field of MCSPI_CH(i)CONF register, Fratio: Even≥2).

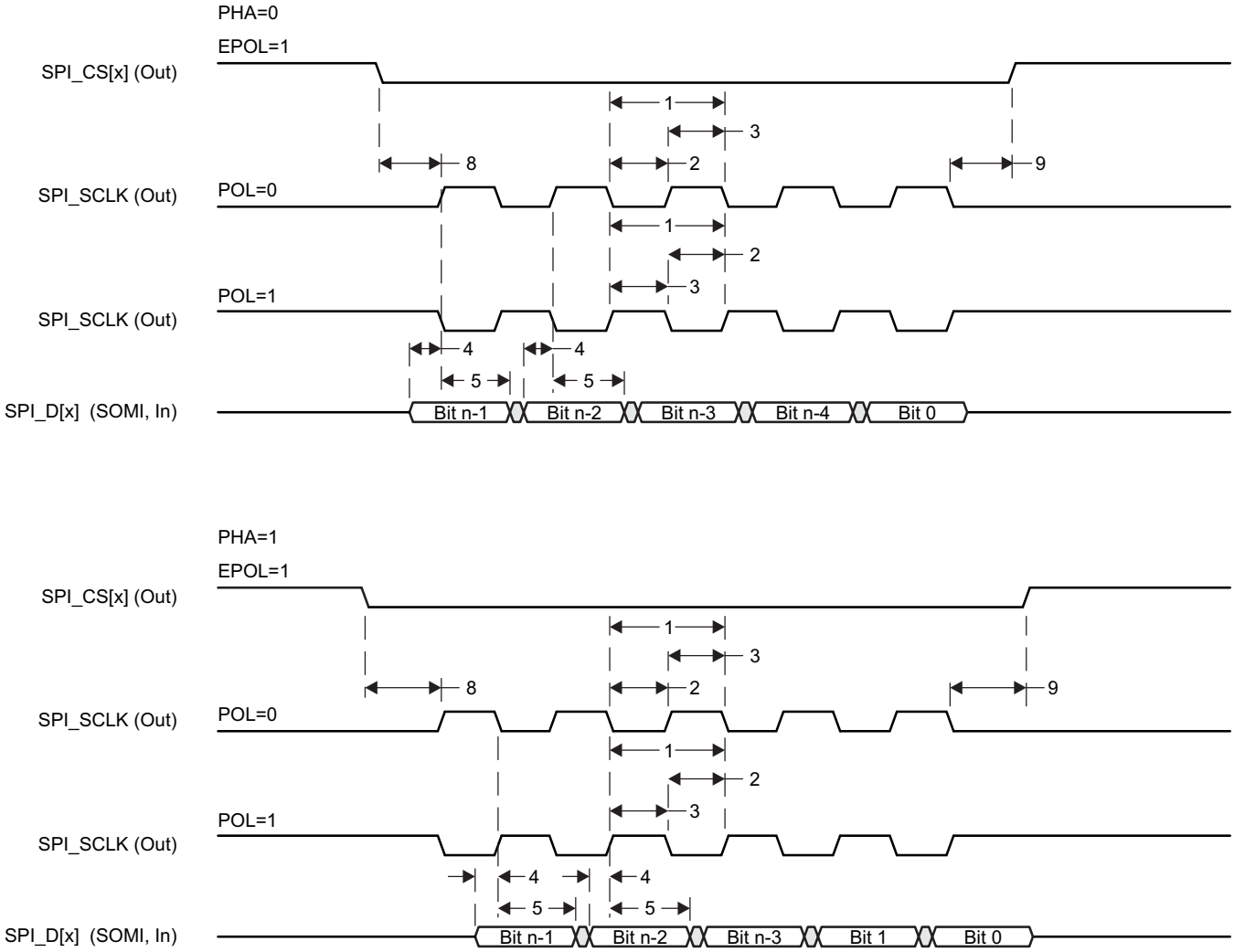

Figure 5-108. SPI Master Mode Receive Timing

Copyright © 2014–2019, Texas Instruments Incorporated

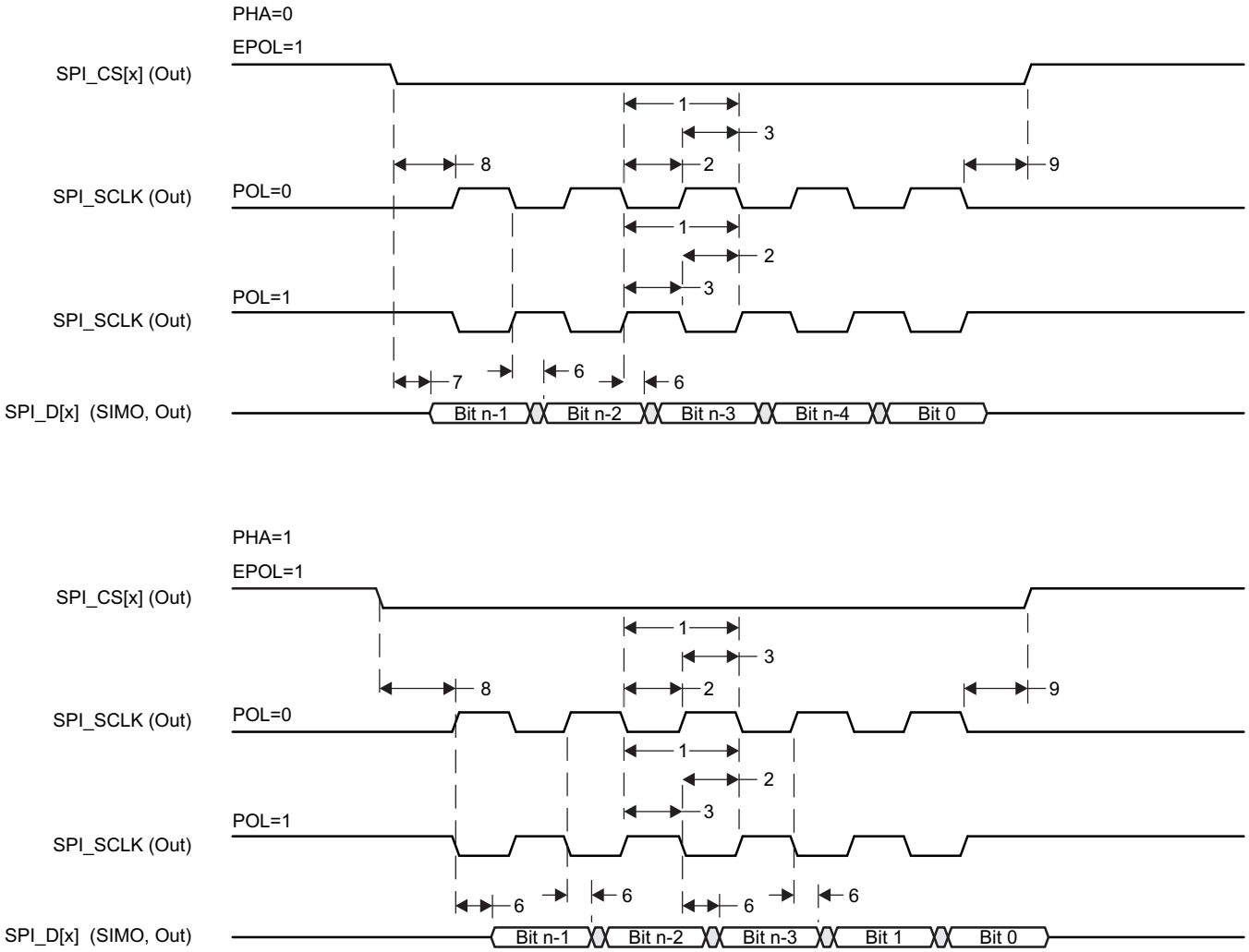

Figure 5-109. SPI Master Mode Transmit Timing

5.12.14 Quad Serial Port Interface (QSPI)

The Quad SPI (QSPI) module allows single, dual or quad read access to external SPI devices. This module provides a memory mapped register interface, which provides a direct interface to access data from external SPI devices and to simplify software requirements. It functions as a master only. There is one QSPI module in the device and it is primary intended for fast booting from quad-SPI flash memories.

General SPI features:

- Programmable clock divider
- Six pin interface (QSPI_CLK, QSPI_D0, QSPI_D1,QSPI_D2,QSPI_D3, QSPI_CS0)
- One external chip select signal
- Support for 3-, 4- or 6-pin SPI interface
- Programmable CS0 to DATA_OUT delay from 0 to 3 QSPI_CLKs
- Only supports SPI MODE 3

NOTE

For more information, see the Quad Serial Port Interface section of the *AM437x ARM Cortex-A9 Microprocessors (MPUs) Technical Reference Manual*.

Table 5-94 displays the switching characteristics for the Quad SPI module.

Table 5-94. QSPI Switching Characteristics

(see Figure 5-110 and Figure 5-111)

NO.	PARAMETER		OPP100		OPP50		
			MIN	MAX	MIN	MAX	UNIT
1	$t_{c(QSPI_CLK)}$	Cycle time, QSPI_CLK	20.8 (1)		20.8 (1)		ns
2	$t_{w(QSPI_CLKL)}$	Pulse duration, QSPI_CLK low	9.77 (1)		9.77 (1)		ns
3	$t_{w(QSPI_CLKH)}$	Pulse duration, QSPI_CLK high	9.77 (1)		9.77 (1)		ns
4	$t_{d(CS\text{-}QSPI_CLK)}$	Delay time, QSPI_CSn active edge to QSPI_CLK transition	M*P+5 (2)(3)		M*P+5 (2)(3)		ns
5	$t_{d(QSPI_CLK\text{-}QSPI_CSn)}$	Delay time, QSPI_CLK transition to QSPI_CSn inactive edge	M*P+5 (2)(3)		M*P+5 (2)(3)		ns
6	$t_{d(QSPI_CLK\text{-}D1)}$	Delay time, QSPI_CLK active edge to QSPI_D[0] transition	0	5.5	0	5.5	ns
7	$t_{su(D\text{-}QSPI_CLK)}$	Setup time, QSPI_D[3:0] valid before active QSPI_CLK edge	8.5		8.5		ns
8	$t_{h(QSPI_CLK\text{-}D)}$	Hold time, QSPI_D[3:0] valid after active QSPI_CLK edge	0		0		ns

(1) Maximum supported frequency is 48 MHz.
(2) P = QSPI_CLK period.
(3) M = Programmable via Data Delay Zero (DD0) register.

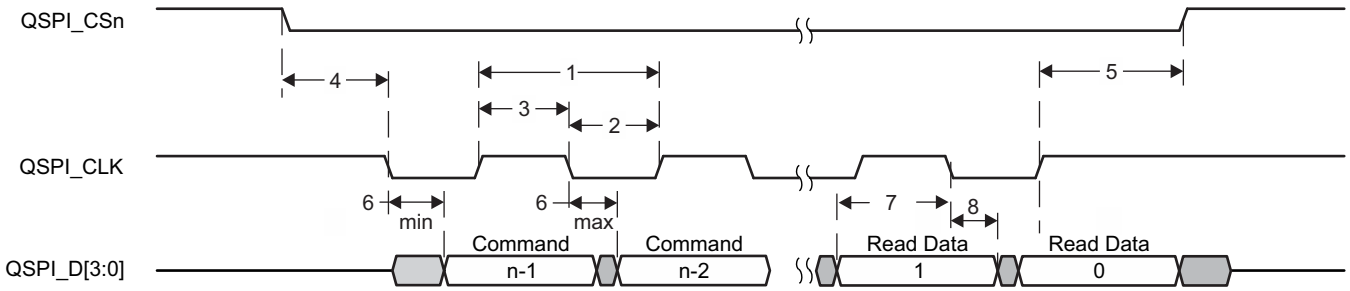

Figure 5-110. QSPI Read Active High Polarity

Copyright © 2014–2019, Texas Instruments Incorporated

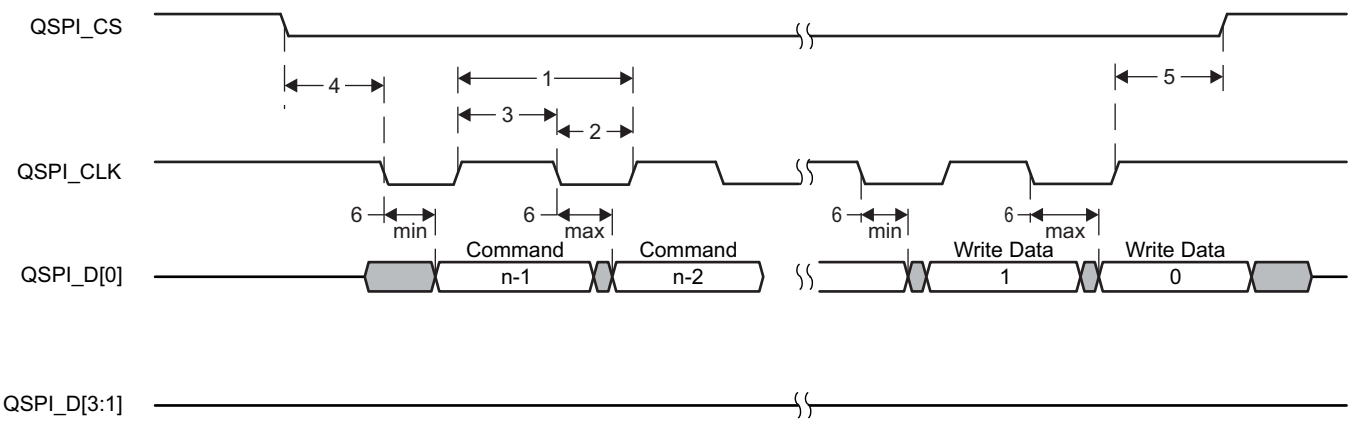

Figure 5-111. QSPI Write Active High Polarity

5.12.15 HDQ/1-Wire Interface (HDQ/1-Wire)

NOTE

For more information, see HDQ/1-Wire Interface chapter of the *AM437x ARM Cortex-A9 Microprocessors (MPUs) Technical Reference Manual*.

The module is intended to work with both HDQ and 1-Wire protocols. The protocols use one wire to communicate between the master and the slave. The protocols employ an asynchronous return to one mechanism where, after any command, the line is pulled high.

5.12.15.1 HDQ Protocol

Table 5-95 and Table 5-96 assume testing over the recommended operating conditions (see Figure 5-112, Figure 5-113, Figure 5-114, and Figure 5-115).

Table 5-95. HDQ Timing Requirements

PARAMETER		MIN	MAX	UNIT
t_{CYCD}	Bit window	190		µs
t_{HW1}	Reads 1	32	66	µs
t_{HW0}	Reads 0	70	145	µs
t_{RSPS}	Command to host respond time(1)	190	320	µs

(1) Defined by software

Table 5-96. HDQ Switching Characteristics

PARAMETER	DESCRIPTION	MIN	MAX	UNIT
t_B	Break timing	190		µs
t_{BR}	Break recovery	40		µs
t_{CYCH}	Bit window	190	250	µs
t_{DW1}	Sends 1 (write)	0.5	50	µs
t_{DW0}	Sends 0 (write)	86	145	µs

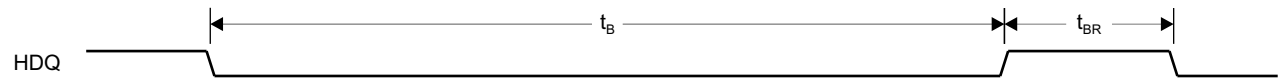

Figure 5-112. HDQ Break (Reset) Timing

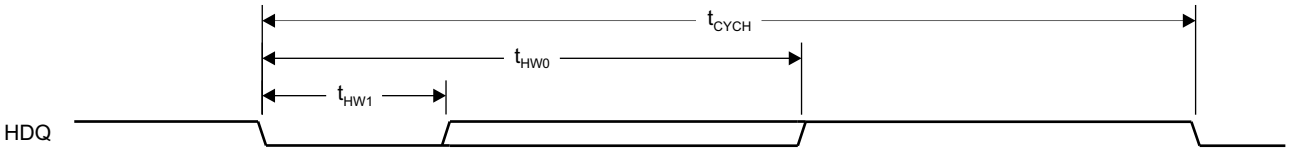

Figure 5-113. HDQ Read Bit Timing (Data)

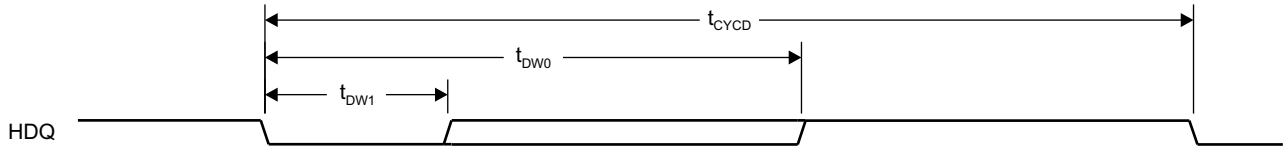

Figure 5-114. HDQ Write Bit Timing (Command/Address or Data)

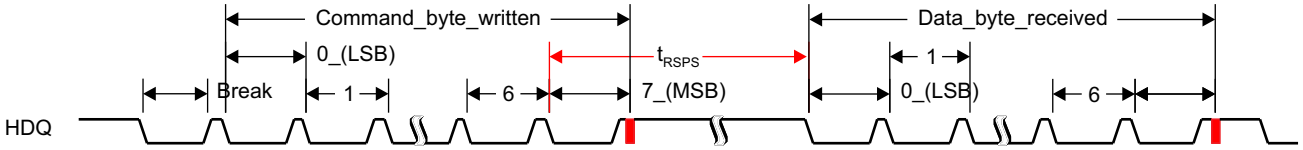

Figure 5-115. HDQ Communication Timing

5.12.15.2 1-Wire Protocol

Table 5-97 and Table 5-98 assume testing over the recommended operating conditions (see Figure 5-116, Figure 5-117, and Figure 5-118).

Table 5-97. HDQ/1-Wire Timing Requirements—1-Wire Mode

PARAMETER		MIN	MAX	UNIT
t_{PDH}	Presence pulse delay high	15	60	µs
t_{PDL}	Presence pulse delay low	60	240	µs
$t_{RDV} + t_{REL}$	Read bit-zero time		60	µs

Table 5-98. HDQ/1-Wire Switching Characteristics—1-Wire Mode

PARAMETER	DESCRIPTION	MIN	MAX	UNIT
t_{RSTL}	Reset time low	480	960	µs
t_{RSTH}	Reset time high	480		µs
t_{SLOT}	Bit cycle time	60	120	µs
t_{LOW1}	Write bit-one time	1	15	µs
t_{LOW0}	Write bit-zero time	60	120	µs
t_{REC}	Recovery time	1		µs
t_{LOWR}	Read bit strobe time	1	15	µs

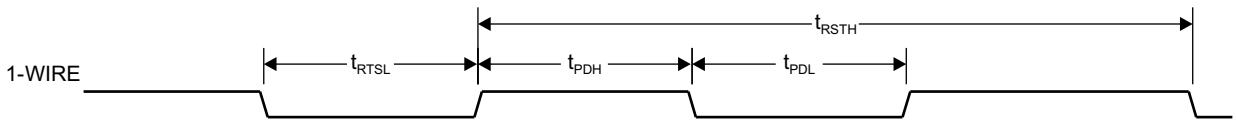

Figure 5-116. 1-Wire Break (Reset) Timing

Copyright © 2014–2019, Texas Instruments Incorporated

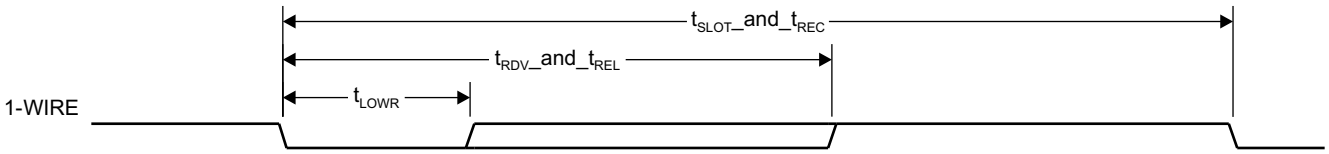

Figure 5-117. 1-Wire Read Bit Timing (Data)

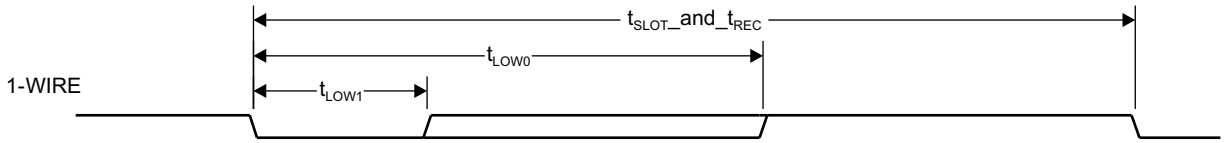

Figure 5-118. 1-Wire Write Bit Timing (Command/Address or Data)

5.12.16 Programmable Real-Time Unit Subsystem and Industrial Communication Subsystem (PRU-ICSS)

For more information, see the Programmable Real-Time Unit Subsystem and Industrial Communication Subsystem Interface (PRU-ICSS) section of the *AM437x Sitara Processors Technical Reference Manual*.

5.12.16.1 Programmable Real-Time Unit (PRU-ICSS PRU)

Table 5-99. PRU-ICSS PRU Timing Conditions

TIMING CONDITION PARAMETER		MIN	MAX	UNIT
Output Condition				
C_{load}	Capacitive load for each bus line	3	30	pF

5.12.16.1.1 PRU-ICSS PRU Direct Input/Output Mode Electrical Data and Timing

Table 5-100. PRU-ICSS PRU Timing Requirements - Direct Input Mode

(see Figure 5-119)

NO.			MIN	MAX	UNIT
1	$t_{w(GPI)}$	Pulse width, GPI	2*P (1)		ns
2	$t_{r(GPI)}$	Rise time, GPI	1.00	3.00	ns
	$t_{f(GPI)}$	Fall time, GPI	1.00	3.00	
3	$t_{sk(GPI)}$	Internal skew between GPI[n:0] signals (2)		5.00	ns

(1) P = L3_CLK (PRU-ICSS ocp clock) period.
(2) n = 16, 11 for PRU-ICSS1 and 19 for PRU-ICSS0

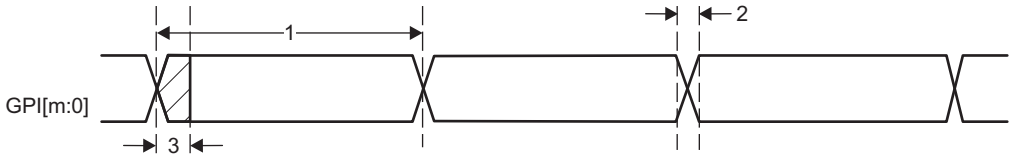

Figure 5-119. PRU-ICSS PRU Direct Input Timing

Table 5-101. PRU-ICSS PRU Switching Requirements - Direct Output Mode

(see Figure 5-103)

NO.			MIN	MAX	UNIT
1	$t_{w(GPO)}$	Pulse width, GPO	2*P (1)		ns
3	$t_{sk(GPO)}$	Internal skew between GPO[n:0] signals (2)		5.00	ns

(1) P = L3_CLK (PRU-ICSS ocp clock) period.
(2) n = 11 for PRU-ICSS1 and 19 for PRU-ICSS0

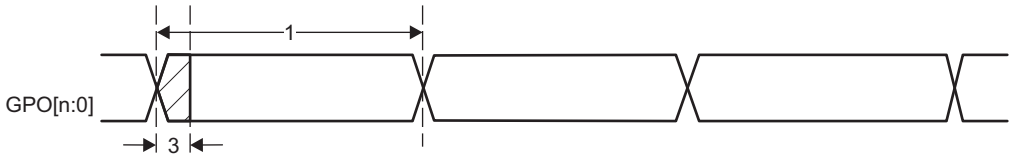

Figure 5-120. PRU-ICSS PRU Direct Output Timing

Copyright © 2014–2019, Texas Instruments Incorporated

5.12.16.1.2 PRU-ICSS PRU Parallel Capture Mode Electrical Data and Timing

Table 5-102. PRU-ICSS PRU Timing Requirements - Parallel Capture Mode

(see Figure 5-121 and Figure 5-122)

NO.			MIN	MAX	UNIT
1	$t_{c(CLOCKIN)}$	Cycle time, CLOCKIN	20.00		ns
2	$t_{w(CLOCKIN_L)}$	Pulse duration, CLOCKIN low	10.00		ns
3	$t_{w(CLOCKIN_H)}$	Pulse duration, CLOCKIN high	10.00		ns
4	$t_{r(CLOCKIN)}$	Rising time, CLOCKIN	1.00	3.00	ns
5	$t_{f(CLOCKIN)}$	Falling time, CLOCKIN	1.00	3.00	ns
6	$t_{su(DATAIN-CLOCKIN)}$	Setup time, DATAIN valid before CLOCKIN	4.00		ns
7	$t_{h(CLOCKIN-DATAIN)}$	Hold time, DATAIN valid after CLOCKIN	0		ns
8	$t_{r(DATAIN)}$	Rising time, DATAIN	1.00	3.00	ns
	$t_{f(DATAIN)}$	Falling time, DATAIN	1.00	3.00	

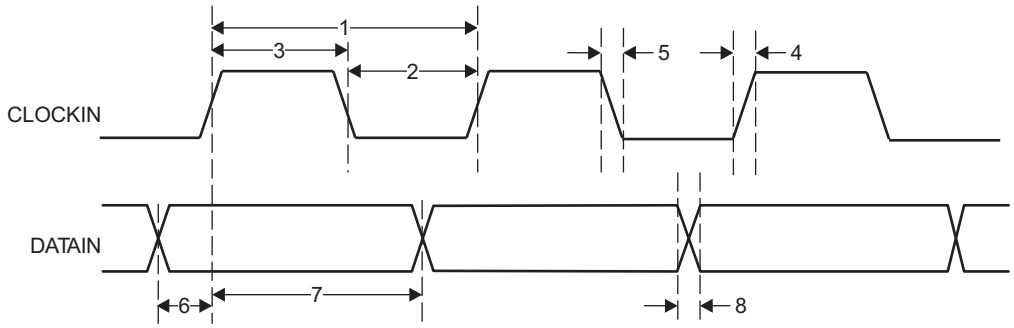

Figure 5-121. PRU-ICSS PRU Parallel Capture Timing - Rising Edge Mode

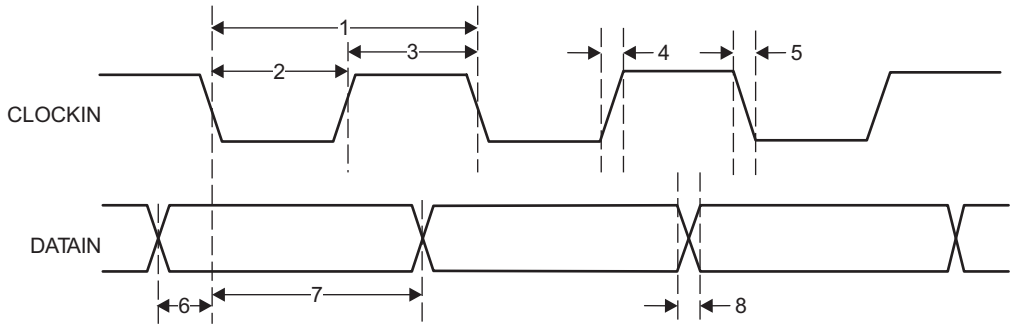

Figure 5-122. PRU-ICSS PRU Parallel Capture Timing - Falling Edge Mode

5.12.16.1.3 PRU-ICSS PRU Shift Mode Electrical Data and Timing

Table 5-103. PRU-ICSS PRU Timing Requirements - Shift In Mode

(see Figure 5-123)

NO.			MIN	MAX	UNIT
1	$t_{c(DATAIN)}$	Cycle time, DATAIN	10.00		ns
2	$t_{w(DATAIN)}$	Pulse width, DATAIN	0.45*P (1)	0.55*P (1)	ns
3	$t_{r(DATAIN)}$	Rising time, DATAIN	1.00	3.00	ns
4	$t_{f(DATAIN)}$	Falling time, DATAIN	1.00	3.00	ns

(1) P = L3_CLK (PRU-ICSS ocp clock) period.

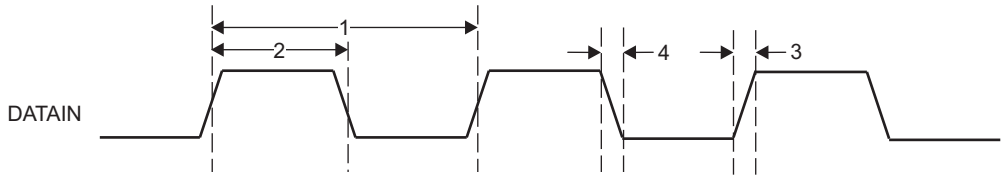

Figure 5-123. PRU-ICSS PRU Shift In Timing

Table 5-104. PRU-ICSS PRU Switching Requirements - Shift Out Mode

(see Figure 5-124)

NO.			MIN	MAX	UNIT
1	$t_{c(CLOCKOUT)}$	Cycle time, CLOCKOUT	10.00		ns
2	$t_{w(CLOCKOUT)}$	Pulse width, CLOCKOUT	0.45*P (1)	0.55*P (1)	ns
3	$t_{r(CLOCKOUT)}$	Rising time, CLOCKOUT	1.00	3.00	ns
4	$t_{f(CLOCKOUT)}$	Falling time, CLOCKOUT	1.00	3.00	ns
5	$t_{d(CLOCKOUT-DATAOUT)}$	Delay time, CLOCKOUT to DATAOUT Valid	-1.50	3.00	ns
6	$t_{r(DATAOUT)}$	Rising time, DATAOUT	1.00	3.00	ns
	$t_{f(DATAOUT)}$	Falling time, DATAOUT	1.00	3.00	

(1) P = L3_CLK (PRU-ICSS ocp clock) period.

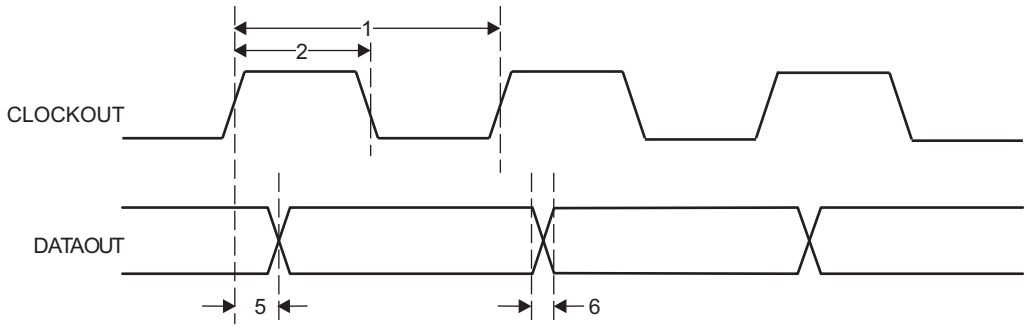

Figure 5-124. PRU-ICSS PRU Shift Out Timing

5.12.16.1.4 PRU-ICSS Sigma Delta Electrical Data and Timing

Table 5-105. PRU-ICSS Timing Requirements - Sigma Delta Mode

(see Figure 5-125 and Figure 5-126)

NO.			MIN	MAX	UNIT
1	$t_{w(SDx_CLK)}$	Pulse width, SDx_CLK	20.00		ns
2	$t_{r(SDx_CLK)}$	Rising time, SDx_CLK	1.00	3.00	ns
3	$t_{f(SDx_CLK)}$	Falling time, SDx_CLK	1.00	3.00	ns
4	$t_{su(SDx_D-SDx_CLK)}$	Setup time, SDx_D valid before SDx_CLK active edge	10.00		ns
5	$t_{h(SDx_CLK-SDx_D)}$	Hold time, SDx_D valid before SDx_CLK active edge	5.00		ns
6	$t_{r(SDx_D)}$	Rising time, SDx_D	1.00	3.00	ns
	$t_{f(SDx_D)}$	Falling time, SDx_D	1.00	3.00	

Copyright © 2014–2019, Texas Instruments Incorporated

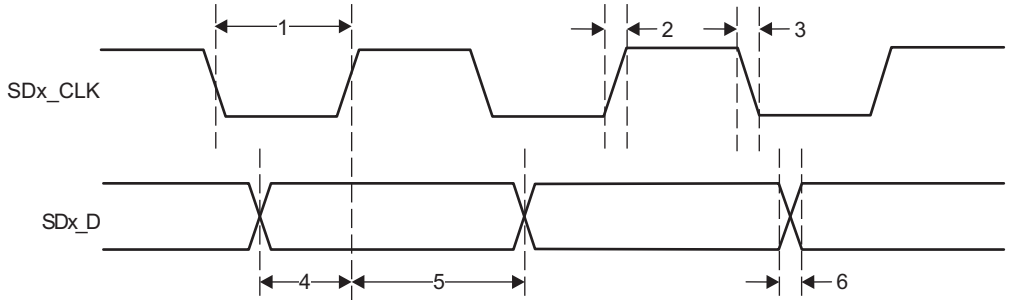

Figure 5-125. PRU-ICSS Sigma Delta Timing - SD_CLK Rising Active Edge

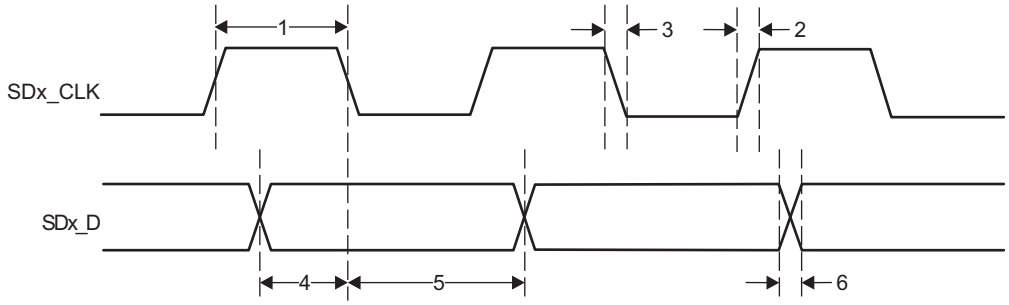

Figure 5-126. PRU-ICSS Sigma Delta Timing - SD_CLK Falling Active Edge

5.12.16.1.5 PRU-ICSS ENDAT Electrical Data and Timing

Table 5-106. PRU-ICSS Timing Requirements - ENDAT Mode

(see Figure 5-127)

NO.			MIN	MAX	UNIT
1	$t_{w(ENDATx_IN)}$	Pulse width, ENDATx_IN	40.00		ns
2	$t_{r(ENDATx_IN)}$	Rising time, ENDATx_IN	1.00	10.00	ns
3	$t_{f(ENDATx_IN)}$	Falling time, ENDATx_IN	1.00	10.00	ns

Table 5-107. PRU-ICSS Switching Requirements - ENDAT Mode

(see Figure 5-127)

NO.			MIN	MAX	UNIT
4	$t_{w(ENDATx_CLK)}$	Pulse width, ENDATx_CLK	20.00		ns
5	$t_{r(ENDATx_CLK)}$	Rising time, ENDATx_CLK	1.00	3.00	ns
6	$t_{f(ENDATx_CLK)}$	Falling time, ENDATx_CLK	1.00	3.00	ns
7	$t_{d(ENDATx_OUT-ENDATx_CLK)}$	Delay time, ENDATx_CLK fall to ENDATx_OUT	-10.00	10.00	ns
8	$t_{r(ENDATx_OUT)}$	Rising time, ENDATx_OUT	1.00	3.00	ns
	$t_{f(ENDATx_OUT)}$	Falling time, ENDATx_OUT	1.00	3.00	
9	$t_{d(ENDATx_OUT_EN-ENDATx_CLK)}$	Delay time, ENDATx_CLK Fall to ENDATx_OUT_EN	-10.00	10.00	ns

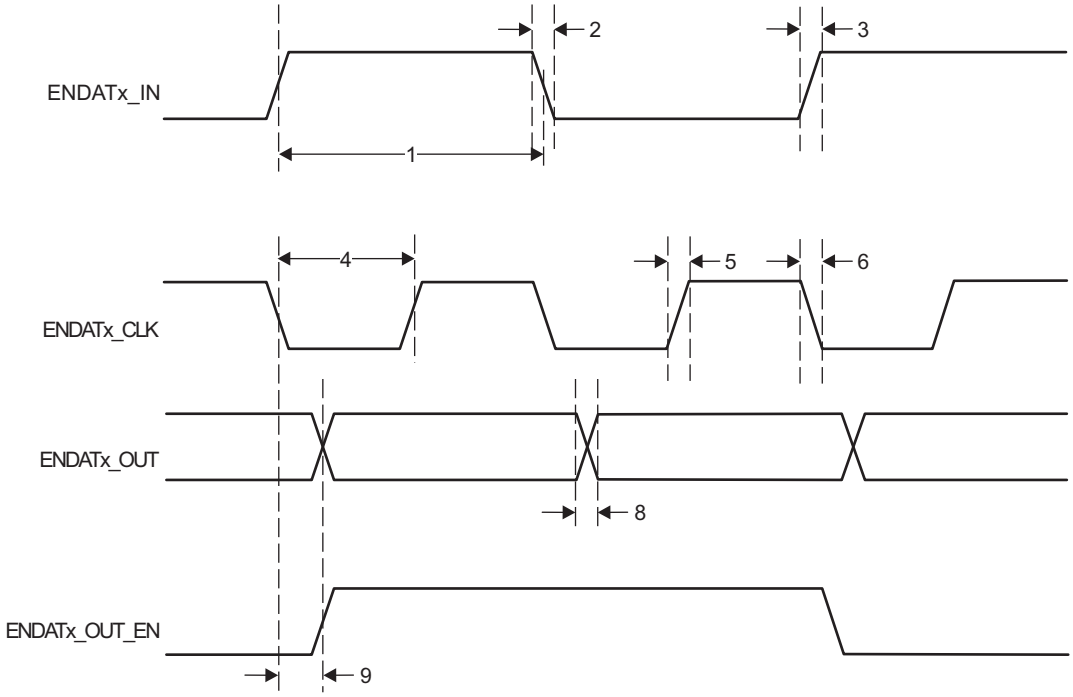

Figure 5-127. PRU-ICSS ENDAT Timing

5.12.16.2 PRU-ICSS EtherCAT (PRU-ICSS ECAT)

Table 5-108. PRU-ICSS ECAT Timing Conditions

TIMING CONDITION PARAMETER		MIN	MAX	UNIT
Output Condition				
C_{load}	Capacitive load for each bus line		30	pF

5.12.16.2.1 PRU-ICSS ECAT Electrical Data and Timing

Table 5-109. PRU-ICSS ECAT Timing Requirements - Input Validated With LATCH_IN

(see Figure 5-128)

NO.			MIN	MAX	UNIT
1	$t_{w(EDIO_LATCH_IN)}$	Pulse width, EDIO_LATCH_IN	100.00		ns
2	$t_{r(EDIO_LATCH_IN)}$	Rising time, EDIO_LATCH_IN	1.00	3.00	ns
3	$t_{f(EDIO_LATCH_IN)}$	Falling time, EDIO_LATCH_IN	1.00	3.00	ns
4	$t_{su(EDIO_DATA_IN-EDIO_LATCH_IN)}$	Setup time, EDIO_DATA_IN valid before EDIO_LATCH_IN active edge	20.00		ns
5	$t_{h(EDIO_LATCH_IN-EDIO_DATA_IN)}$	Hold time, EDIO_DATA_IN valid after EDIO_LATCH_IN active edge	20.00		ns
6	$t_{r(EDIO_DATA_IN)}$	Rising time, EDIO_DATA_IN	1.00	3.00	ns
	$t_{f(EDIO_DATA_IN)}$	Falling time, EDIO_DATA_IN	1.00	3.00	

Copyright © 2014–2019, Texas Instruments Incorporated

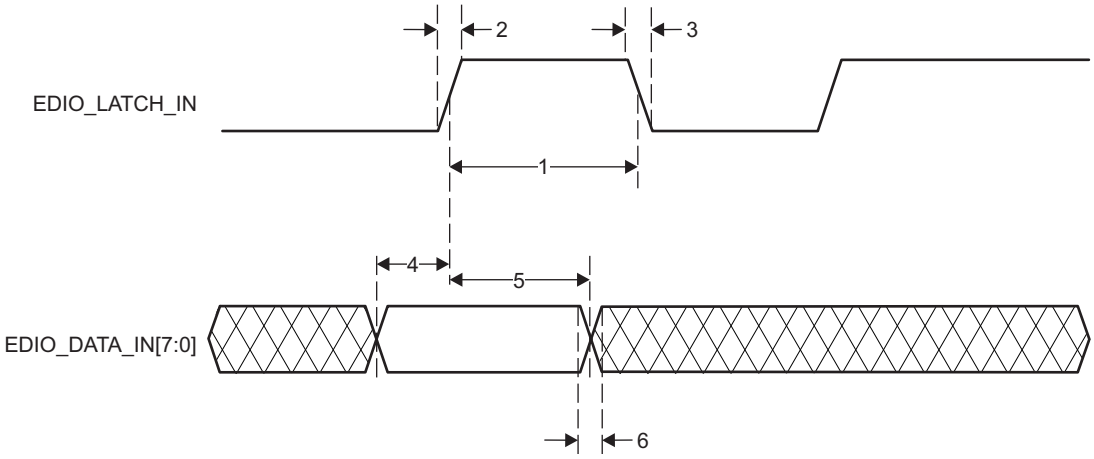

Figure 5-128. PRU-ICSS ECAT Input Validated With LATCH_IN Timing

Table 5-110. PRU-ICSS ECAT Timing Requirements - Input Validated With SYNCx

(see Figure 5-129)

NO.			MIN	MAX	UNIT
1	$t_{w(EDC_SYNCx_OUT)}$	Pulse width, EDC_SYNCx_OUT	100.00		ns
2	$t_{r(EDC_SYNCx_OUT)}$	Rising time, EDC_SYNCx_OUT	1.00	3.00	ns
3	$t_{f(EDC_SYNCx_OUT)}$	Falling time, EDC_SYNCx_OUT	1.00	3.00	ns
4	$t_{su(EDIO_DATA_IN-EDC_SYNCx_OUT)}$	Setup time, EDIO_DATA_IN valid before EDC_SYNCx_OUT active edge	24.50		ns
5	$t_{h(EDC_SYNCx_OUT-EDIO_DATA_IN)}$	Hold time, EDIO_DATA_IN valid after EDC_SYNCx_OUT active edge	22.00		ns
6	$t_{r(EDIO_DATA_IN)}$	Rising time, EDIO_DATA_IN	1.00	3.00	ns
	$t_{f(EDIO_DATA_IN)}$	Falling time, EDIO_DATA_IN	1.00	3.00	

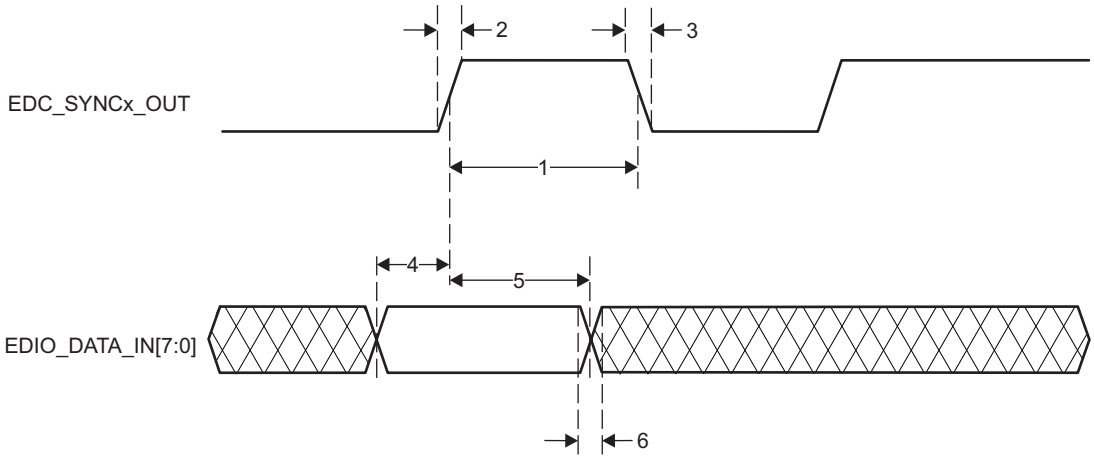

Figure 5-129. PRU-ICSS ECAT Input Validated With SYNCx Timing

Table 5-111. PRU-ICSS ECAT Timing Requirements - Input Validated With Start of Frame (SOF)

(see Figure 5-130)

NO.			MIN	MAX	UNIT
1	$t_{w(EDIO_SOF)}$	Pulse duration, EDIO_SOF	4*P (1)	5*P (1)	ns
2	$t_{r(EDIO_SOF)}$	Rising time, EDIO_SOF	1.00	3.00	ns
3	$t_{f(EDIO_SOF)}$	Falling time, EDIO_SOF	1.00	3.00	ns
4	$t_{su(EDIO_DATA_IN-EDIO_SOF)}$	Setup time, EDIO_DATA_IN valid before EDIO_SOF active edge	20.00		ns
5	$t_{h(EDIO_SOF-EDIO_DATA_IN)}$	Hold time, EDIO_DATA_IN valid after EDIO_SOF active edge	20.00		ns
6	$t_{r(EDIO_DATA_IN)}$	Rising time, EDIO_DATA_IN	1.00	3.00	ns
	$t_{f(EDIO_DATA_IN)}$	Falling time, EDIO_DATA_IN	1.00	3.00	

(1) P = PRU-ICSS IEP clock source period.

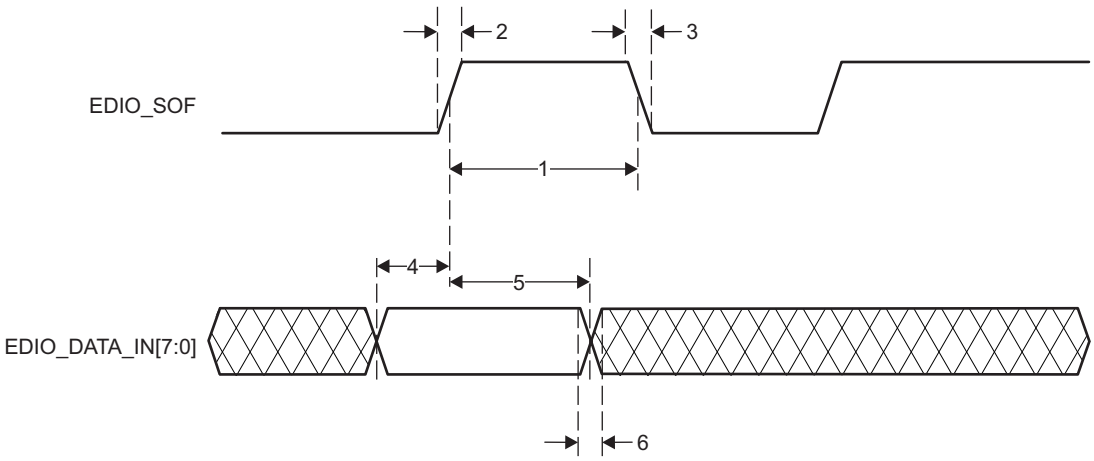

Figure 5-130. PRU-ICSS ECAT Input Validated With SOF

Table 5-112. PRU-ICSS ECAT Timing Requirements - LATCHx_IN

(see Figure 5-131)

NO.			MIN	MAX	UNIT
1	$t_{w(EDC_LATCHx_IN)}$	Pulse duration, EDC_LATCHx_IN	3*P (1)		ns
2	$t_{r(EDC_LATCHx_IN)}$	Rising time, EDC_LATCHx_IN	1.00	3.00	ns
3	$t_{f(EDC_LATCHx_IN)}$	Falling time, EDC_LATCHx_IN	1.00	3.00	ns

(1) P = PRU-ICSS IEP clock source period.

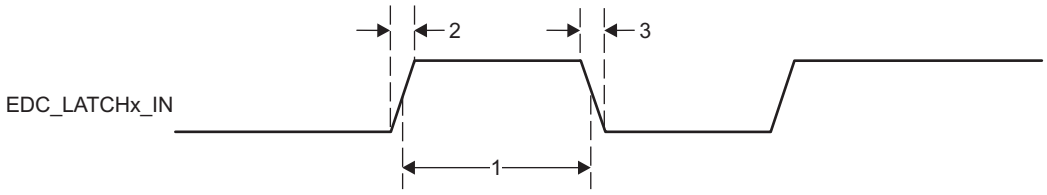

Figure 5-131. PRU-ICSS ECAT LATCHx_IN Timing

Copyright © 2014–2019, Texas Instruments Incorporated

Table 5-113. PRU-ICSS ECAT Switching Requirements - Digital IOs

NO.			MIN	MAX	UNIT
1	$t_{w(EDIO_OUTVALID)}$	Pulse duration, EDIO_OUTVALID	14*P (1)	32*P (1)	ns
2	$t_{r(EDIO_OUTVALID)}$	Rising time, EDIO_OUTVALID	1.00	3.00	ns
3	$t_{f(EDIO_OUTVALID)}$	Falling time, EDIO_OUTVALID	1.00	3.00	ns
4	$t_{d(EDIO_OUTVALID-EDIO_DATA_OUT)}$	Delay time, EDIO_OUTVALID to EDIO_DATA_OUT	0.00	18*P (1)	ns
5	$t_{r(EDIO_DATA_OUT)}$	Rising time, EDIO_DATA_OUT	1.00	3.00	ns
6	$t_{f(EDIO_DATA_OUT)}$	Falling time, EDIO_DATA_OUT	1.00	3.00	ns
7	$t_{sk(EDIO_DATA_OUT)}$	EDIO_DATA_OUT skew		8.00	ns

(1) P = PRU-ICSS IEP clock source period.

5.12.16.3 PRU-ICSS MII_RT and Switch

Table 5-114. PRU-ICSS MII_RT Switch Timing Conditions

TIMING CONDITION PARAMETER		MIN	TYP	MAX	UNIT
Input Conditions					
t_r	Input signal rise time	1 (1)		5 (1)	ns
t_f	Input signal fall time	1 (1)		5 (1)	ns
Output Condition					
C_{LOAD}	Output load capacitance			20	pF

(1) Except when specified otherwise.

5.12.16.3.1 PRU-ICSS MDIO Electrical Data and Timing

Table 5-115. PRU-ICSS MDIO Timing Requirements - MDIO_DATA

(see Figure 5-132)

NO.			MIN	TYP	MAX	UNIT
1	$t_{su(MDIO-MDC)}$	Setup time, MDIO valid before MDC high	90			ns
2	$t_{h(MDIO-MDC)}$	Hold time, MDIO valid from MDC high	0			ns

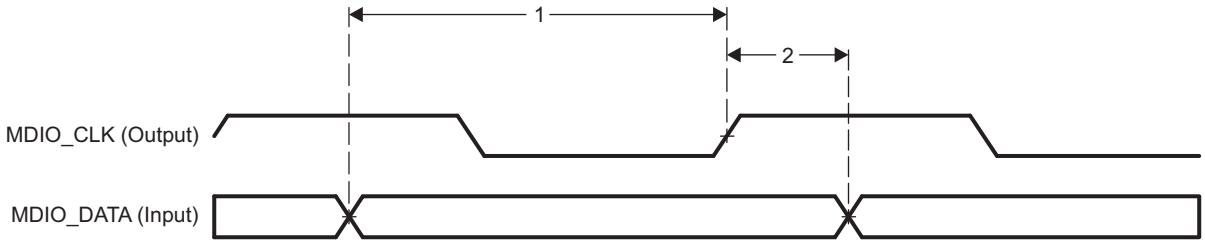

Figure 5-132. PRU-ICSS MDIO_DATA Timing - Input Mode

Table 5-116. PRU-ICSS MDIO Switching Characteristics - MDIO_CLK

(see Figure 5-133)

NO.			MIN	TYP	MAX	UNIT
1	$t_{c(MDC)}$	Cycle time, MDC	400			ns
2	$t_{w(MDCH)}$	Pulse duration, MDC high	160			ns
3	$t_{w(MDCL)}$	Pulse duration, MDC low	160			ns

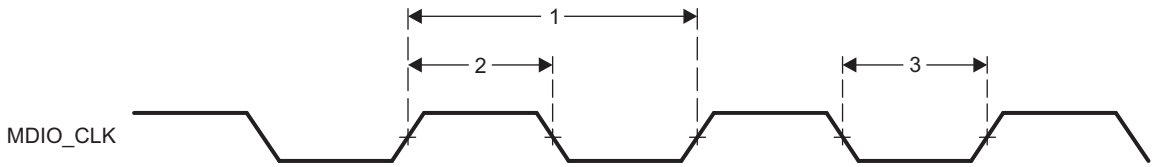

Figure 5-133. PRU-ICSS MDIO_CLK Timing

Table 5-117. PRU-ICSS MDIO Switching Characteristics - MDIO_DATA

(see Figure 5-134)

NO.			MIN	TYP	MAX	UNIT
1	$t_{d(MDC-MDIO)}$	Delay time, MDC high to MDIO valid	10		(P*0.5)–10 (1)	ns

(1) P = MDIO_CLK period.

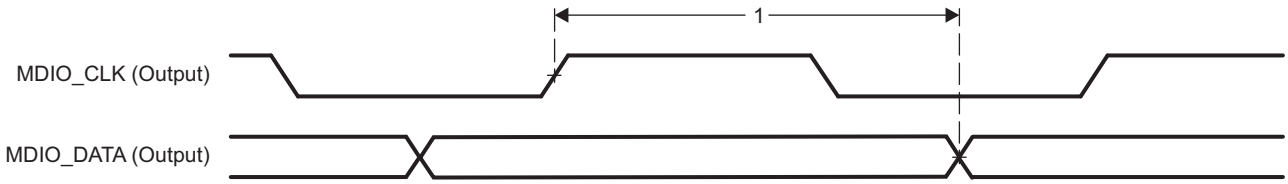

Figure 5-134. PRU-ICSS MDIO_DATA Timing - Output Mode

5.12.16.3.2 PRU-ICSS MII_RT Electrical Data and Timing

NOTE

In order to guarantee the MII_RT I/O timing values published in the device data manual, the PRU ocp_clk clock must be configured for 200 MHz (default value) and the TX_CLK_DELAY bit field in the PRUSS_MII_RT TXCFG0/1 register must be configured as follows:

- 100 Mbps mode: 6h (non-default value)
- 10 Mbps mode: 0h (default value)

Table 5-118. PRU-ICSS MII_RT Timing Requirements - MII_RXCLK

(see Figure 5-135)

NO.			10 Mbps			100 Mbps			UNIT
			MIN	TYP	MAX	MIN	TYP	MAX	
1	$t_{c(RX_CLK)}$	Cycle time, RX_CLK	399.96		400.04	39.996		40.004	ns
2	$t_{w(RX_CLKH)}$	Pulse Duration, RX_CLK high	140		260	14		26	ns
3	$t_{w(RX_CLKL)}$	Pulse Duration, RX_CLK low	140		260	14		26	ns
4	$t_{t(RX_CLK)}$	Transition time, RX_CLK			3			3	ns

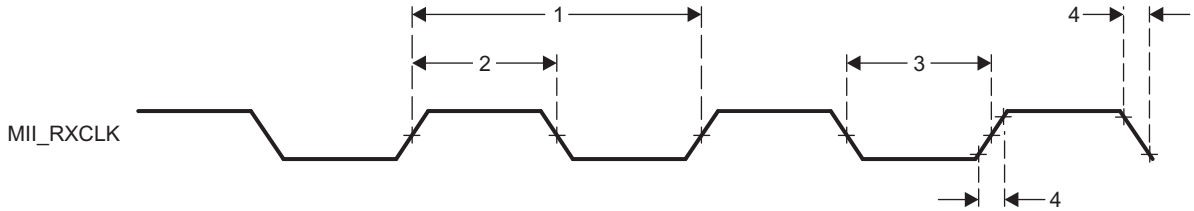

Figure 5-135. PRU-ICSS MII_RXCLK Timing

Copyright © 2014–2019, Texas Instruments Incorporated

Table 5-119. PRU-ICSS MII_RT Timing Requirements - MII[x]_TXCLK

(see Figure 5-136)

NO.			10 Mbps			100 Mbps			UNIT
			MIN	TYP	MAX	MIN	TYP	MAX	
1	$t_{c(TX_CLK)}$	Cycle time, TX_CLK	399.96		400.04	39.996		40.004	ns
2	$t_{w(TX_CLKH)}$	Pulse Duration, TX_CLK high	140		260	14		26	ns
3	$t_{w(TX_CLKL)}$	Pulse Duration, TX_CLK low	140		260	14		26	ns
4	$t_{t(TX_CLK)}$	Transition time, TX_CLK			3			3	ns

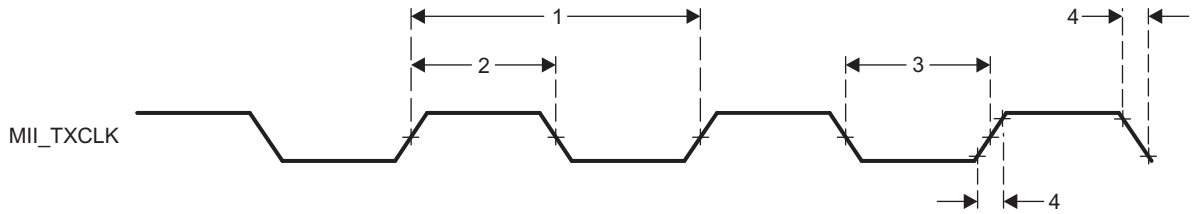

Figure 5-136. PRU-ICSS MII_TXCLK Timing

Table 5-120. PRU-ICSS MII_RT Timing Requirements - MII_RXD[3:0], MII_RXDV, and MII_RXER

(see Figure 5-137)

NO.			10 Mbps			100 Mbps			UNIT
			MIN	TYP	MAX	MIN	TYP	MAX	
1	$t_{su(RXD\text{-}RX_CLK)}$	Setup time, RXD[3:0] valid before RX_CLK	8			8			ns
	$t_{su(RX_DV\text{-}RX_CLK)}$	Setup time, RX_DV valid before RX_CLK							
	$t_{su(RX_ER\text{-}RX_CLK)}$	Setup time, RX_ER valid before RX_CLK							
2	$t_{h(RX_CLK\text{-}RXD)}$	Hold time RXD[3:0] valid after RX_CLK	8			8			ns
	$t_{h(RX_CLK\text{-}RX_DV)}$	Hold time RX_DV valid after RX_CLK							
	$t_{h(RX_CLK\text{-}RX_ER)}$	Hold time RX_ER valid after RX_CLK							

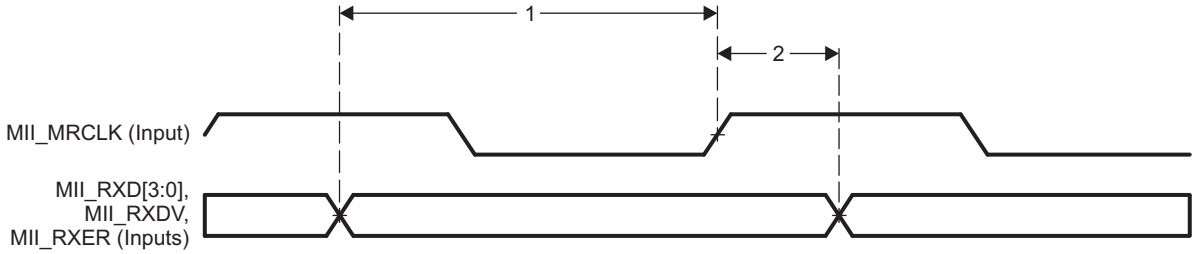

Figure 5-137. PRU-ICSS MII_RXD[3:0], MII_RXDV, and MII_RXER Timing

Table 5-121. PRU-ICSS MII_RT Switching Characteristics - MII_TXD[3:0] and MII_TXEN

(see Figure 5-138)

NO.			10 Mbps			100 Mbps			UNIT
			MIN	TYP	MAX	MIN	TYP	MAX	
1	$t_{d(TX_CLK-TXD)}$	Delay time, TX_CLK high to TXD[3:0] valid	5		27	5		25	ns
	$t_{d(TX_CLK-TX_EN)}$	Delay time, TX_CLK to TX_EN valid							

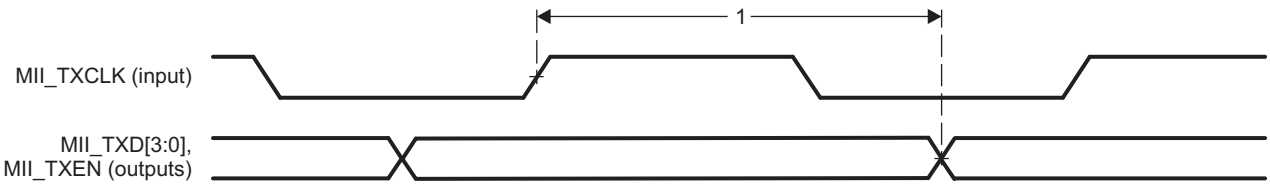

Figure 5-138. PRU-ICSS MII_TXD[3:0], MII_TXEN Timing

5.12.16.4 PRU-ICSS Universal Asynchronous Receiver Transmitter (PRU-ICSS UART)

Table 5-122. Timing Requirements for PRU-ICSS UART Receive

(see Figure 5-139)

NO.			MIN	MAX	UNIT
3	$t_{w(RX)}$	Pulse width, receive start, stop, data bit	0.96U (1)	1.05U (1)	ns

(1) U = UART baud time = 1/programmed baud rate.

Table 5-123. Switching Characteristics Over Recommended Operating Conditions for PRU-ICSS UART Transmit

(see Figure 5-139)

NO.			MIN	MAX	UNIT
1	$f_{baud(baud)}$	Maximum programmable baud rate	0	12	MHz
2	$t_{w(TX)}$	Pulse width, transmit start, stop, data bit	U - 2 (1)	U + 2 (1)	ns

(1) U = UART baud time = 1/programmed baud rate.

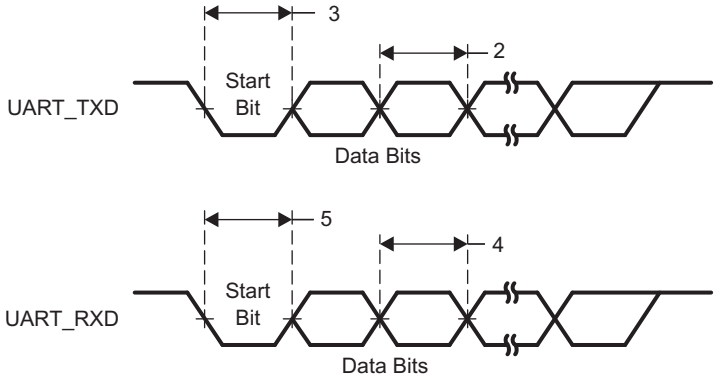

Figure 5-139. PRU-ICSS UART Timing

Copyright © 2014–2019, Texas Instruments Incorporated

5.12.17 Multimedia Card (MMC) Interface

For more information, see the Multimedia Card (MMC) section of the *AM437x ARM Cortex-A9 Microprocessors (MPUs) Technical Reference Manual*.

5.12.17.1 MMC Electrical Data and Timing

Table 5-124. MMC Timing Conditions

TIMING CONDITION PARAMETER		MIN	TYP	MAX	UNIT
Input Conditions					
t_r	Input signal rise time	1		5	ns
t_f	Input signal fall time	1		5	ns
Output Condition					
C_{load}	Output load capacitance	3		30	pF

Table 5-125. Timing Requirements for MMC[0]_CMD and MMC[0]_DAT[7:0]

(see Figure 5-140)

NO.			OPP50/OPP100						UNIT
			1.8 V			3.3 V			
			MIN	TYP	MAX	MIN	TYP	MAX	
1	$t_{su(CMDV-CLKH)}$	Setup time, MMC_CMD valid before MMC_CLK rising clock edge	4.1			4.1			ns
2	$t_{h(CLKH-CMDV)}$	Hold time, MMC_CMD valid after MMC_CLK rising clock edge	1.5			1.5			ns
3	$t_{su(DATV-CLKH)}$	Setup time, MMC_DATx valid before MMC_CLK rising clock edge	4.1			4.1			ns
4	$t_{h(CLKH-DATV)}$	Hold time, MMC_DATx valid after MMC_CLK rising clock edge	1.5			1.5			ns

Table 5-126. Timing Requirements for MMC[1/2]_CMD and MMC[1/2]_DAT[7:0]

(see Figure 5-140)

NO.			OPP50/OPP100						UNIT
			1.8 V			3.3 V			
			MIN	TYP	MAX	MIN	TYP	MAX	
1	$t_{su(CMDV-CLKH)}$	Setup time, MMC_CMD valid before MMC_CLK rising clock edge	4.1			4.1			ns
2	$t_{h(CLKH-CMDV)}$	Hold time, MMC_CMD valid after MMC_CLK rising clock edge	2.55			3.76			ns
3	$t_{su(DATV-CLKH)}$	Setup time, MMC_DATx valid before MMC_CLK rising clock edge	4.1			4.1			ns
4	$t_{h(CLKH-DATV)}$	Hold time, MMC_DATx valid after MMC_CLK rising clock edge	2.55			3.76			ns

Copyright © 2014–2019, Texas Instruments Incorporated

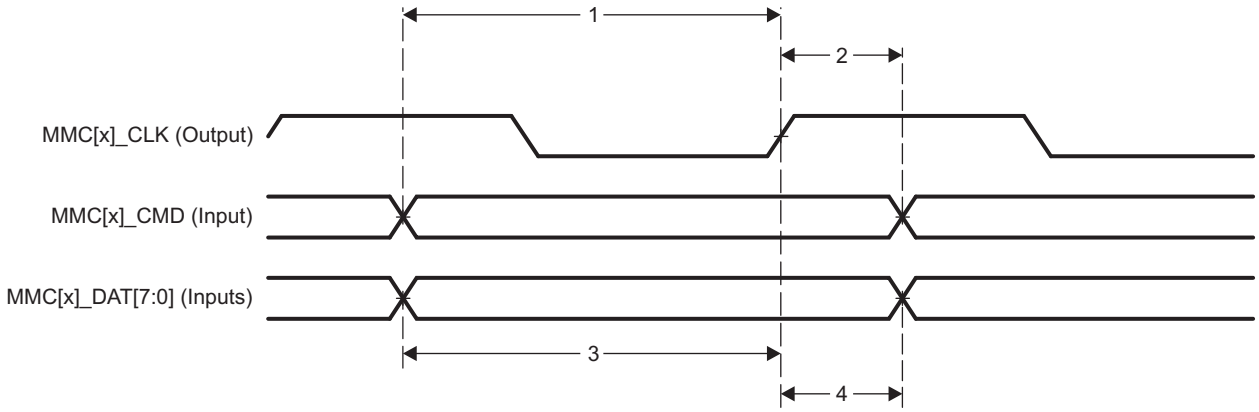

Figure 5-140. MMC[x]_CMD and MMC[x]_DAT[7:0] Input Timing

Copyright © 2014–2019, Texas Instruments Incorporated

Table 5-127. Switching Characteristics for MMC[x]_CLK

(see Figure 5-141)

NO.	PARAMETER		STANDARD MODE			HIGH-SPEED MODE			UNIT
			MIN	TYP	MAX	MIN	TYP	MAX	
5	$f_{op(CLK)}$	Operating frequency, MMC_CLK			24			48	MHz
	$t_{cop(CLK)}$	Operating period: MMC_CLK	41.7			20.8			ns
	$f_{id(CLK)}$	Identification mode frequency, MMC_CLK			400			400	kHz
	$t_{cid(CLK)}$	Identification mode period: MMC_CLK	2500			2500			ns
6	$t_{w(CLKL)}$	Pulse duration, MMC_CLK low	(0.5*P) - $t_{f(CLK)}$ (1)			(0.5*P) - $t_{f(CLK)}$ (1)			ns
7	$t_{w(CLKH)}$	Pulse duration, MMC_CLK high	(0.5*P) - $t_{r(CLK)}$ (1)			(0.5*P) - $t_{r(CLK)}$ (1)			ns

(1) P = MMC_CLK period.

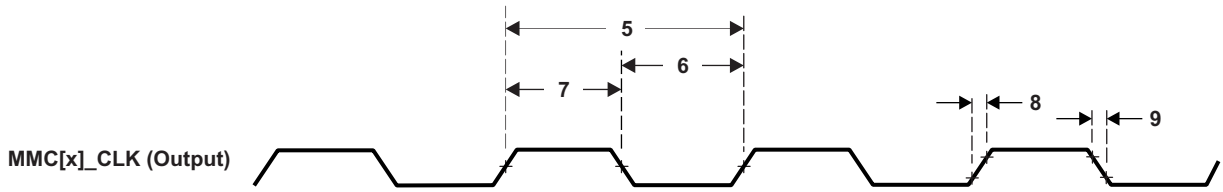

Figure 5-141. MMC[x]_CLK Timing

Table 5-128. Switching Characteristics for MMC[x]_CMD and MMC[x]_DAT[7:0]—HSPE=0

(see Figure 5-142)

NO.	PARAMETER		OPP50/OPP100						UNIT
			1.8 V			3.3 V			
			MIN	TYP	MAX	MIN	TYP	MAX	
10	$t_{d(CLKL-CMD)}$	Delay time, MMC_CLK falling clock edge to MMC_CMD transition	-7.4		4.4	-7.4		4.4	ns
11	$t_{d(CLKL-DAT)}$	Delay time, MMC_CLK falling clock edge to MMC_DATx transition	-7.4		4.4	-7.4		4.4	ns

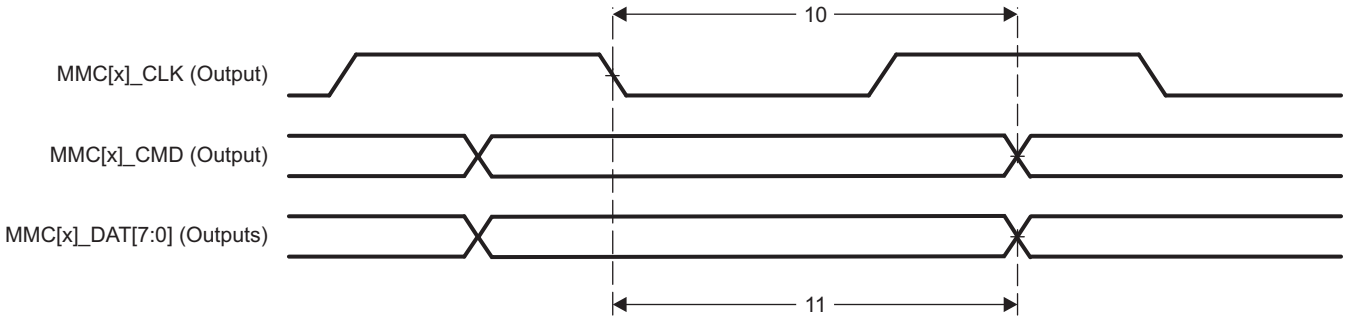

Figure 5-142. MMC[x]_CMD and MMC[x]_DAT[7:0] Output Timing—HSPE=0

Table 5-129. Switching Characteristics for MMC[x]_CMD and MMC[x]_DAT[7:0]—HSPE=1

(see Figure 5-143)

NO.	PARAMETER		OPP50/OPP100						UNIT
			1.8 V			3.3 V			
			MIN	TYP	MAX	MIN	TYP	MAX	
12	$t_{d(CLKL-CMD)}$	Delay time, MMC_CLK rising clock edge to MMC_CMD transition	0.8		7.4	0.8		7.4	ns
13	$t_{d(CLKL-DAT)}$	Delay time, MMC_CLK rising clock edge to MMC_DATx transition	0.8		7.4	0.8		7.4	ns

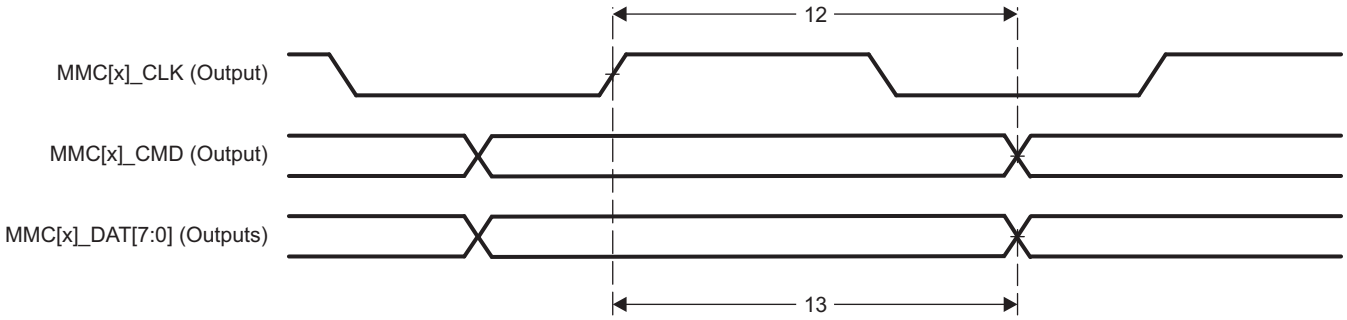

Figure 5-143. MMC[x]_CMD and MMC[x]_DAT[7:0] Output Timing—HSPE=1

Copyright © 2014–2019, Texas Instruments Incorporated

5.12.18 Universal Asynchronous Receiver/Transmitter (UART)

For more information, see the Universal Asynchronous Receiver/Transmitter (UART) section of the *AM437x ARM Cortex-A9 Microprocessors (MPUs) Technical Reference Manual*.

5.12.18.1 UART Electrical Data and Timing

Table 5-130. Timing Requirements for UARTx Receive

(see Figure 5-144)

NO.			MIN	MAX	UNIT
3	$t_{w(RX)}$	Pulse width, receive start, stop, data bit	0.96U[(1)]	1.05U[(1)]	ns

(1) U = UART baud time = 1/programmed baud rate.

Table 5-131. for UARTx Transmit

(see Figure 5-144)

NO.	PARAMETER		MIN	MAX	UNIT
1	$f_{baud(baud)}$	Maximum programmable baud rate		3.6864	MHz
2	$t_{w(TX)}$	Pulse width, transmit start, stop, data bit	U - 2[(1)]	U + 2[(1)]	ns

(1) U = UART baud time = 1/programmed baud rate.

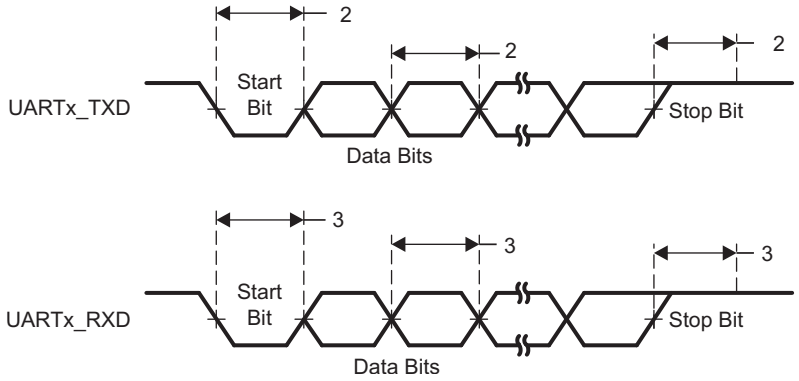

Figure 5-144. UART Timings

5.12.18.2 UART IrDA Interface

The IrDA module operates in three different modes:

- Slow infrared (SIR) (≤ 115.2 kbps)
- Medium infrared (MIR) (0.576 Mbps and 1.152 Mbps)
- Fast infrared (FIR) (4 Mbps).

Figure 5-145 shows the UART IrDA pulse parameters. Table 5-132 and Table 5-133 list the signaling rates and pulse durations for UART IrDA receive and transmit modes.

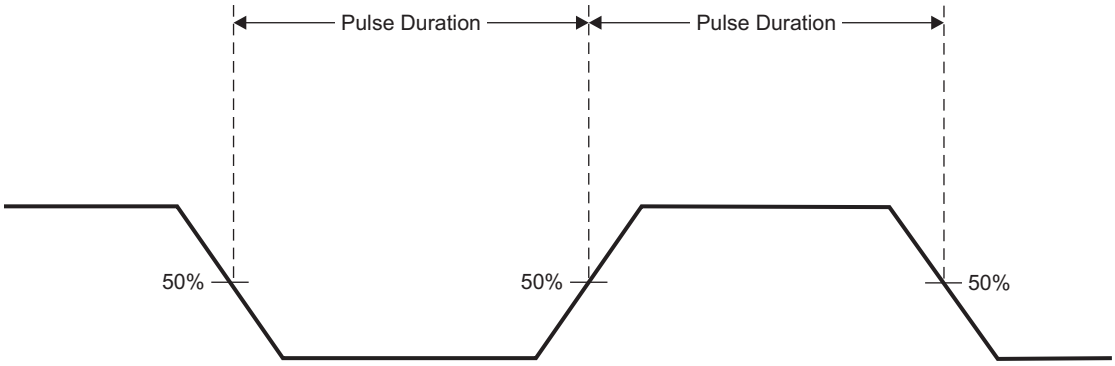

Figure 5-145. UART IrDA Pulse Parameters

Table 5-132. UART IrDA—Signaling Rate and Pulse Duration—Receive Mode

SIGNALING RATE	ELECTRICAL PULSE DURATION		UNIT
	MIN	MAX	
SIR			
2.4 kbps	1.41	88.55	µs
9.6 kbps	1.41	22.13	µs
19.2 kbps	1.41	11.07	µs
38.4 kbps	1.41	5.96	µs
57.6 kbps	1.41	4.34	µs
115.2 kbps	1.41	2.23	µs
MIR			
0.576 Mbps	297.2	518.8	ns
1.152 Mbps	149.6	258.4	ns
FIR			
4 Mbps (Single pulse)	67	164	ns
4 Mbps (Double pulse)	190	289	ns

Copyright © 2014–2019, Texas Instruments Incorporated

Table 5-133. UART IrDA—Signaling Rate and Pulse Duration—Transmit Mode

SIGNALING RATE	ELECTRICAL PULSE DURATION		UNIT
	MIN	MAX	
SIR			
2.4 kbps	78.1	78.1	µs
9.6 kbps	19.5	19.5	µs
19.2 kbps	9.75	9.75	µs
38.4 kbps	4.87	4.87	µs
57.6 kbps	3.25	3.25	µs
115.2 kbps	1.62	1.62	µs
MIR			
0.576 Mbps	414	419	ns
1.152 Mbps	206	211	ns
FIR			
4 Mbps (Single pulse)	123	128	ns
4 Mbps (Double pulse)	248	253	ns

5.13 Emulation and Debug

5.13.1 IEEE 1149.1 JTAG

5.13.1.1 JTAG Electrical Data and Timing

Table 5-134. Timing Requirements for JTAG

(see Figure 5-146)

NO.			OPP100		OPP50		UNIT
			MIN	MAX	MIN	MAX	
1	$t_{c(TCK)}$	Cycle time, TCK	60		60		ns
1a	$t_{w(TCKH)}$	Pulse duration, TCK high (40% of t_c)	24		24		ns
1b	$t_{w(TCKL)}$	Pulse duration, TCK low (40% of t_c)	24		24		ns
3	$t_{su(TDI-TCKH)}$	Input setup time, TDI valid to TCK high	3		3		ns
	$t_{su(TMS-TCKH)}$	Input setup time, TMS valid to TCK high	3		3		ns
4	$t_{h(TCKH-TDI)}$	Input hold time, TDI valid from TCK high	8		8		ns
	$t_{h(TCKH-TMS)}$	Input hold time, TMS valid from TCK high	8		8		ns

Table 5-135. Switching Characteristics for JTAG

(see Figure 5-146)

NO.	PARAMETER		OPP100		OPP50		UNIT
			MIN	MAX	MIN	MAX	
2	$t_{d(TCKL-TDO)}$	Delay time, TCK low to TDO valid	0	23	0	23	ns

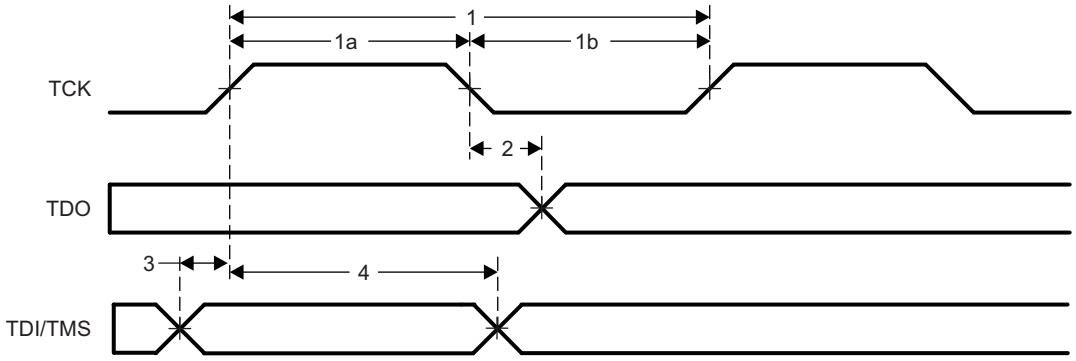

Figure 5-146. JTAG Timing

Copyright © 2014–2019, Texas Instruments Incorporated

6 Device and Documentation Support

6.1 Device Nomenclature

To designate the stages in the product development cycle, TI assigns prefixes to the part numbers of all processors and support tools. Each device has one of three prefixes: X, P, or null (no prefix) (for example, XAM4379xZDN). Texas Instruments recommends two of three possible prefix designators for its support tools: TMDX and TMDS. These prefixes represent evolutionary stages of product development from engineering prototypes (TMDX) through fully qualified production devices and tools (TMDS).

Device development evolutionary flow:

X Experimental device that is not necessarily representative of the final device's electrical specifications and may not use production assembly flow.

P Prototype device that is not necessarily the final silicon die and may not necessarily meet final electrical specifications.

null Production version of the silicon die that is fully qualified.

Support tool development evolutionary flow:

TMDX Development-support product that has not yet completed Texas Instruments internal qualification testing.

TMDS Fully-qualified development-support product.

X and P devices and TMDX development-support tools are shipped against the following disclaimer:

"Developmental product is intended for internal evaluation purposes."

Production devices and TMDS development-support tools have been characterized fully, and the quality and reliability of the device have been demonstrated fully. TI's standard warranty applies.

Predictions show that prototype devices (X or P) have a greater failure rate than the standard production devices. Texas Instruments recommends that these devices not be used in any production system because their expected end-use failure rate still is undefined. Only qualified production devices are to be used.

TI device nomenclature also includes a suffix with the device family name. This suffix indicates the package type (for example, ZDN), the temperature range (for example, blank is the default commercial temperature range), and the device speed range, in megahertz (for example, 80 is 800 MHz). Figure 6-1 provides a legend for reading the complete device name for any device.

For orderable part numbers of AM437x devices in the ZDN package type, see the Package Option Addendum of this document, the TI website, or contact your TI sales representative.

For additional description of the device nomenclature markings on the die, see the *AM437x Sitara Processors Silicon Errata*.

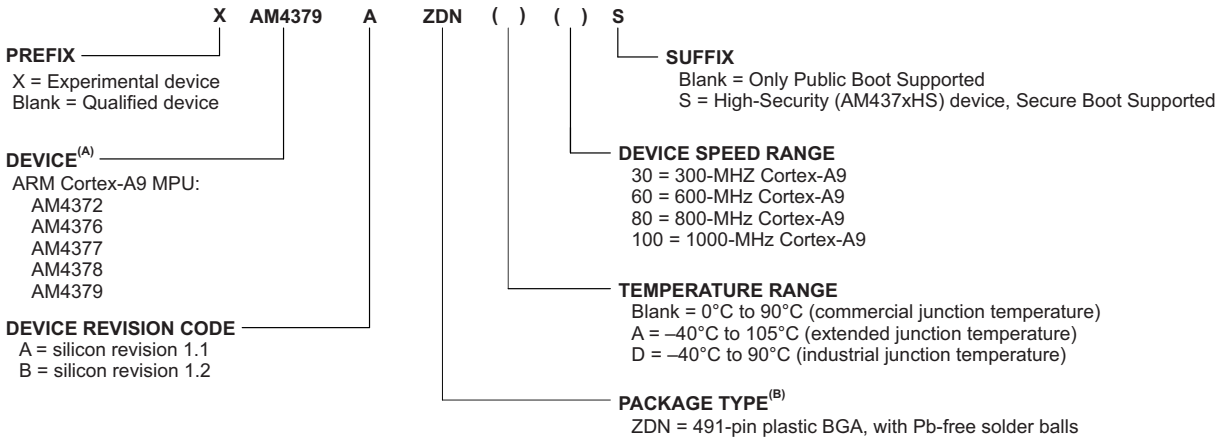

A. The device shown in this device nomenclature example is one of several valid part numbers for this family of devices. For orderable device part numbers, see the Package Option Addendum of this document.

B. BGA = Ball Grid Array.

Figure 6-1. Device Nomenclature

6.2 Tools and Software

TI offers an extensive line of development tools. Tools and software to evaluate the performance of the device, generate code, and develop solutions are listed below.

Models

AM437x BSDL Model ZDN package BSDL model.

AM437x IBIS Model ZDN package IBIS model.

Design Kits and Evaluation Modules

AM437x Evaluation Module Enables developers to immediately start evaluating the AM437x processor family (AM4372, AM4376, AM4377, AM4378 and AM4379) and begin building applications such as portable navigation, patient monitoring, home/building automation, barcode scanners, portable data terminals and others.

AM437x Industrial Development Kit (IDK) An application development platform for evaluating the industrial communication and control capabilities of Sitara AM4379 and AM4377 processors for industrial applications.

AM437x Starter Kit Provides a stable and affordable platform to quickly start evaluation of Sitara ARM Cortex-A9 AM437x Processors (AM4372, AM4376, AM4378) and accelerate development for HMI, industrial and networking applications. It is a low-cost development platform based on the ARM Cortex-A9 processor that is integrated with options such as Dual Gigabit Ethernet, DDR3L, Camera and Capacitive Touch Screen LCD.

TI Designs

ARM MPU with Integrated BiSS C Master Interface Reference Design Impelementation of BiSS C Master protocol on Industrial Communication Sub-System (PRU-ICSS). The design provides full documentation and source code for Programmable Realtime Unit (PRU).

Sercos III Slave For AM437x Communication Development Platform Reference Design Combines the AM437x Sitara processor family from Texas Instruments (TI) and the Sercos III media access control (MAC) layer into a single system-on-chip (SoC) solution. Targeted for Sercos III slave communications, the TIDEP0039 allows designers to implement the real-time Sercos III communication standard for a broad range of industrial automation equipment.

EnDat 2.2 System Reference Design Implements the EnDat 2.2 Master protocol stack and hardware interface solution based on the HEIDENHAIN EnDat 2.2 standard for position or rotary encoders. The design is composed of the EnDat 2.2 Master protocol stack, half-duplex communications using RS485 transceivers and the line termination implemented on the Sitara AM437x Industrial Development Kit.

Copyright © 2014–2019, Texas Instruments Incorporated

Acontis EtherCAT Master Stack Reference Design A highly portable software stack that can be used on various embedded platforms. The EC-Master supports the high performane TI Sitara MPUs, it provides a sophisticated EtherCAT Master solution which customers can use to implement EtherCAT communication interface boards, EtherCAT based PLC or motion control applications.

SPI Master with Signal Path Delay Compensation Reference Design Describes the implementation of the SPI master protocol with signal path delay compensation on PRU-ICSS. It supports the 32-bit communication protocol of ADS8688 with a SPI clock frequency of up to 16.7MHz.

Isolated Current Shunt and Voltage Measurement Reference Design for Motor Drives Using AM437x
Uses the AMC130x reinforced isolated delta-sigma modulators along with AM437x Sitara ARM Cortex-A9 Processor, which implements Sinc filters on PRU-ICSS. The design provides an ability to evaluate the performance of these measurements: three motor currents, three inverter voltages, and the DC Link voltage.

Single Chip Drive for Industrial Communications and Motor Control Implements a hardware interface solution based on the HEIDENHAIN EnDat 2.2 standard for position or rotary encoders. The platform also allows designers to implement real-time EtherCAT communications standards in a broad range of industrial automation equipment.

AM437x Low Power Suspend Mode with LPDDR2 Realizes processor power consumption less than 0.1 mW while keeping LPDDR2 memory in self refresh consuming ~ 1.6 mW. The system solution is comprised of AM437x Sitara processor, LPDDR2 memory and TPS65218 power management IC and optimized for new low power mode along with support for legacy low power modes.

AM437x Discrete Power Reference Design Provides flexibility to power designers. This reference design implementation is a BOM-optimized discrete power solution for the AM437x processor with a minimal number of discrete ICs and basic feature set. T

Embedded USB 2.0 Reference Design The USB 2.0 reference design guidelines are extremely important for designers considering USB2.0 electrical compliance testing. The guidelines are applicable to AM335x and AM437x but also generic to other processors. The approach taken for these guidelines is highly practical, without complex formulas or theory.

ARM MPU with Integrated HIPERFACE DSL Master Interface Reference Design Implementation of HIPERFACE DSL Master protocol on Industrial Communication Sub-System (PRU-ICSS). The two wire interface allows for integration of position feedback wires into motor cable. Complete solution consists of AM437x PRU-ICSS firmware and TIDA-00177 transceiver reference design.

Software

Processor SDK for AM437X Sitara Processors - Linux and TI-RTOS Support A unified software platform for TI embedded processors providing easy setup and fast out-of-the-box access to benchmarks and demos. All releases of Processor SDK are consistent across TI's broad portfolio, allowing developers to seamlessly reuse and migrate software across devices.

Programmable Real-time Unit (PRU) Software Support Package An add-on package that provides a framework and examples for developing software for the Programmable Real-time Unit sub-system and Industrial Communication Sub-System (PRU-ICSS) in the supported TI processors.

SYS/BIOS Industrial Software Development Kit (SDK) for Sitara Processors Gives customers the ability to easily add real-time industrial communications to their design so they can focus on differentiating their application code.

TI Dual-Mode Bluetooth® Stack Comprised of Single-Mode and Dual-Mode offerings implementing the Bluetooth 4.0 specification. The Bluetooth stack is fully Bluetooth Special Interest Group (SIG) qualified, certified and royalty-free, provides simple command line sample applications to speed development, and upon request has MFI capability.

Development Tools

Clock Tree Tool for Sitara ARM Processors Interactive clock tree configuration software that provides information about the clocks and modules in Sitara devices.

Pin Mux Tool Provides a Graphical User Interface for configuring pin multiplexing settings, resolving conflicts and specifying I/O cell characteristics for TI MPUs. Results are output as C header/code files that can be imported into software development kits (SDK) or used to configure customer's custom software. Version 3 of the Pin Mux utility adds the capability of automatically selecting a mux configuration that satisfies the entered requirements.

Power Estimation Tool (PET) Provides users the ability to gain insight in to the power consumption of select TI processors. The tool includes the ability for the user to choose multiple application scenarios and understand the power consumption as well as how advanced power saving techniques can be applied to further reduce overall power consumption.

XDS200 USB Debug Probe Connects to the target board via a TI 20-pin connector (with multiple adapters for TI 14-pin, ARM 10-pin and ARM 20-pin) and to the host PC via USB2.0 High Speed (480Mbps). It also requires a license of Code Composer Studio IDE running on the host PC.

XDS560v2 System Trace USB and Ethernet Debug Probe Adds system pin trace in its large external memory buffer. Available for selected TI devices, this external memory buffer captures device-level information that allows obtaining accurate bus performance activity and throughput, as well as power management of core and peripherals. Also, all XDS debug probes support Core and System Trace in all ARM and DSP processors that feature an Embedded Trace Buffer (ETB).

XDS560v2 System Trace USB Debug Probe Adds system pin trace in its large external memory buffer. Available for selected TI devices, this external memory buffer captures device-level information that allows obtaining accurate bus performance activity and throughput, as well as power management of core and peripherals. Also, all XDS debug probes support Core and System Trace in all ARM and DSP processors that feature an Embedded Trace Buffer (ETB).

6.3 Documentation Support

To receive notification of documentation updates, navigate to the device product folder on ti.com. In the upper right corner, click on *Alert me* to register and receive a weekly digest of any product information that has changed. For change details, review the revision history included in any revised document.

The current documentation that describes the processor, related peripherals, and other technical collateral is listed below.

Errata

AM437x Sitara Processors Silicon Errata Describes the known exceptions to the functional specifications for this microprocessor.

Application Reports

High-Speed Interface Layout Guidelines As modern bus interface frequencies scale higher, care must be taken in the printed circuit board (PCB) layout phase of a design to ensure a robust solution.

User's Guides

AM437x Sitara Processors Technical Reference Manual Collection of documents providing detailed information on the device including power, reset, and clock control, interrupts, memory map, and switch fabric interconnect. Detailed information on the microprocessor unit (MPU) subsystem as well as a functional description of the peripherals supported is also included.

Discrete Power Solution for AM437x Details the implementation of a BOM-optimized discrete power solution for the AM437x processor with a minimal number of discrete ICs and basic feature set. The solution represents a baseline for a discrete power solution that can be extended for additional features of the AM437x processor.

Powering the AM335x/AM437x with TPS65218 A reference for connectivity between the TPS65218 power management IC and the AM335x or AM437x processor.

Copyright © 2014–2019, Texas Instruments Incorporated

AM437x GP EVM Hardware User's Guide Describes the hardware architecture of the AM437x Evaluation Module (EVM) (part number TMDXEVM437X), which is based on the Texas Instruments (TI) AM437x processor. This EVM is also commonly known as the AM437x General Purpose (GP) EVM.

White Papers

Highly Integrated industrial Drive to Connect, Control and Communicate Discusses the overall drive architecture with emphasis on the highly integrated industrial drive solution by Texas Instruments.

Ensuring Real-Time Predictability High-performance processors like ARM Cortex-A cores have an entirely different set of resources and pro- cessing capabilities than those of real-time processing cores, like the Programmable Real-Time Unit (PRU) coprocessor in TI's Sitara processors.

Mainline Linux Ensures Stability and Innovation Enabling and empowering the rapid development of new functionality starts at the foundational level of the system's software environment – that is, at the level of the Linux kernel – and builds upward from there.

Scalable Solutions for HMI A well designed HMI system decreases that gap between the production process and operator through an intuitive visualization system, layers of detail to allow for a bird's eye view down to the minute details, as well as training material and documentation at the operators' fingertips.

Linaro Speeds Development in TI Linux SDKs Linaro's software is not a Linux distribution; in fact, it is distribution neutral. The focus of the organization's 120 engineers is on optimizing base-level open-source software in areas that interact directly with the silicon such as multimedia, graphics, power management, the Linux kernel and booting processes.

Getting Started on TI ARM Embedded Processor Development Beginning with an overview of ARM technology and available processor platforms, this paper will then explore the fundamentals of embedded design that influence a system's architecture and, consequently, impact processor selection.

The Yocto Project: Changing the Way Embedded Linux Software Solutions are Developed Enabling complex silicon devices such as SoC with operating firmware and application software can be a challenge for equipment manufacturers who often are more comfortable with hardware than software issues.

Other Documents

Sitara AM437x Processor With ARM Cortex-A9 Core TI continues to optimize and expand its portfolio of Sitara processor solutions for the embedded market. With the Sitara AM437x processors support for the ARM Cortex-A9 core, extending performance by up to 40 percent over the current Sitara AM335x processor line.

Sitara Processors Using the ARM Cortex-A series of cores, are optimized system solutions that go beyond the core, delivering products that support rich graphics capabilities, LCD displays and multiple industrial protocols.

AM437x Evaluation Module Quick Start Guide Designed to help you through the initial setup of the EVM. This EVM allows you to experience Linux and other operating systems (OSs) that showcase the AM437x Cortex-A9 processor, 3D graphics and more.

The following documents are related to the processor. Copies of these documents can be obtained directly from the internet or from your Texas Instruments representative. To determine the revision of the Cortex-A9 core used on your device, see the device-specific errata.

Cortex-A9 Technical Reference Manual Technical reference manual for the Cortex-A9 processor.

ARM Core Cortex-A9 (AT400/AT401) Errata Notice Provides a list of advisories for the different revisions of the Cortex-A9 processor. For a copy of this document, contact your TI representative.

6.4 Related Links

Table 6-1 lists quick access links. Categories include technical documents, support and community resources, tools and software, and quick access to sample or buy.

Table 6-1. Related Links

PARTS	PRODUCT FOLDER	ORDER NOW	TECHNICAL DOCUMENTS	TOOLS & SOFTWARE	SUPPORT & COMMUNITY
AM4372	Click here	Click here	Click here	Click here	Click here
AM4376	Click here	Click here	Click here	Click here	Click here
AM4377	Click here	Click here	Click here	Click here	Click here
AM4378	Click here	Click here	Click here	Click here	Click here
AM4379	Click here	Click here	Click here	Click here	Click here

6.5 Community Resources

The following links connect to TI community resources. Linked contents are provided "AS IS" by the respective contributors. They do not constitute TI specifications and do not necessarily reflect TI's views; see TI's Terms of Use.

TI E2E™ Online Community The TI engineer-to-engineer (E2E) community was created to foster collaboration among engineers. At e2e.ti.com, you can ask questions, share knowledge, explore ideas and help solve problems with fellow engineers.

TI Embedded Processors Wiki Established to help developers get started with Embedded Processors from Texas Instruments and to foster innovation and growth of general knowledge about the hardware and software surrounding these devices.

6.6 Trademarks

Sitara, E2E are trademarks of Texas Instruments.
NEON is a trademark of ARM Ltd or its subsidiaries.
ARM, Cortex are registered trademarks of ARM Ltd or its subsidiaries.
Bluetooth is a registered trademark of Bluetooth SIG.
EtherCAT is a registered trademark of EtherCAT Technology Group.
PowerVR SGX is a trademark of Imagination Technologies Limited.
Linux is a registered trademark of Linus Torvalds.
1-Wire is a registered trademark of Maxim Integrated Products, Inc.
EtherNet/IP is a trademark of ODVA, Inc.
PROFIBUS, PROFINET are registered trademarks of PROFIBUS & PROFINET International (PI).
All other trademarks are the property of their respective owners.

6.7 Electrostatic Discharge Caution

This integrated circuit can be damaged by ESD. Texas Instruments recommends that all integrated circuits be handled with appropriate precautions. Failure to observe proper handling and installation procedures can cause damage.

ESD damage can range from subtle performance degradation to complete device failure. Precision integrated circuits may be more susceptible to damage because very small parametric changes could cause the device not to meet its published specifications.

6.8 Glossary

TI Glossary This glossary lists and explains terms, acronyms, and definitions.

Copyright © 2014–2019, Texas Instruments Incorporated

7 Mechanical, Packaging, and Orderable Information

7.1 Via Channel

The ZDN package has been specially engineered with Via Channel technology. This technology allows larger than normal PCB via and trace sizes and reduced PCB signal layers to be used in a PCB design with the 0.65-mm pitch package, and substantially reduces PCB costs. It allows PCB routing in only two signal layers (four layers total) due to the increased layer efficiency of the Via Channel BGA technology.

NOTE

Via Channel technology implemented on the this package makes it possible to build a product with a 4-layer PCB, but a 4-layer PCB may not meet system performance goals. Therefore, system performance using a 4-layer PCB design must be evaluated during product design.

7.2 Packaging Information

The following packaging information and addendum reflect the most current data available for the designated device. This data is subject to change without notice and without revision of this document.

The following figure is a preliminary package drawing for the ZDN package option.

Note: The ZDN package is shown with a 17-mm × 17-mm array of 491 solder balls with 0.65-mm pitch, with via channel array (VCA) technology.

PACKAGING INFORMATION

Orderable part number	Status (1)	Material type (2)	Package | Pins	Package qty | Carrier	RoHS (3)	Lead finish/ Ball material (4)	MSL rating/ Peak reflow (5)	Op temp (°C)	Part marking (6)
AM4372BZDN60	Active	Production	NFBGA (ZDN) | 491	90 | JEDEC TRAY (5+1)	Yes	Call TI	Level-3-260C-168 HR	0 to 90	AM4372BZDN60
AM4372BZDN60.B	Active	Production	NFBGA (ZDN) | 491	90 | JEDEC TRAY (5+1)	Yes	Call TI	Level-3-260C-168 HR	0 to 90	AM4372BZDN60
AM4372BZDN80	Active	Production	NFBGA (ZDN) | 491	90 | JEDEC TRAY (5+1)	Yes	Call TI	Level-3-260C-168 HR	0 to 90	AM4372BZDN80
AM4372BZDN80.B	Active	Production	NFBGA (ZDN) | 491	90 | JEDEC TRAY (5+1)	Yes	Call TI	Level-3-260C-168 HR	0 to 90	AM4372BZDN80
AM4372BZDNA60	Active	Production	NFBGA (ZDN) | 491	90 | JEDEC TRAY (5+1)	Yes	Call TI	Level-3-260C-168 HR	-40 to 105	AM4372BZDNA60
AM4372BZDNA60.B	Active	Production	NFBGA (ZDN) | 491	90 | JEDEC TRAY (5+1)	Yes	Call TI	Level-3-260C-168 HR	-40 to 105	AM4372BZDNA60
AM4372BZDNA80	Active	Production	NFBGA (ZDN) | 491	90 | JEDEC TRAY (5+1)	Yes	Call TI	Level-3-260C-168 HR	-40 to 105	AM4372BZDNA80
AM4372BZDNA80.B	Active	Production	NFBGA (ZDN) | 491	90 | JEDEC TRAY (5+1)	Yes	Call TI	Level-3-260C-168 HR	-40 to 105	AM4372BZDNA80
AM4376BZDN100	Active	Production	NFBGA (ZDN) | 491	90 | JEDEC TRAY (5+1)	-	Call TI	Level-3-260C-168 HR	0 to 90	AM4376BZDN100
AM4376BZDN100.B	Active	Production	NFBGA (ZDN) | 491	90 | JEDEC TRAY (5+1)	-	Call TI	Level-3-260C-168 HR	0 to 90	AM4376BZDN100
AM4376BZDN80	Active	Production	NFBGA (ZDN) | 491	90 | JEDEC TRAY (5+1)	Yes	Call TI	Level-3-260C-168 HR	0 to 90	AM4376BZDN80
AM4376BZDN80.B	Active	Production	NFBGA (ZDN) | 491	90 | JEDEC TRAY (5+1)	Yes	Call TI	Level-3-260C-168 HR	0 to 90	AM4376BZDN80
AM4376BZDNA100	Active	Production	NFBGA (ZDN) | 491	90 | JEDEC TRAY (5+1)	-	Call TI	Level-3-260C-168 HR	-40 to 105	AM4376BZDNA100
AM4376BZDNA100.B	Active	Production	NFBGA (ZDN) | 491	90 | JEDEC TRAY (5+1)	-	Call TI	Level-3-260C-168 HR	-40 to 105	AM4376BZDNA100
AM4376BZDNA80	Active	Production	NFBGA (ZDN) | 491	90 | JEDEC TRAY (5+1)	Yes	Call TI	Level-3-260C-168 HR	-40 to 105	AM4376BZDNA80
AM4376BZDNA80.B	Active	Production	NFBGA (ZDN) | 491	90 | JEDEC TRAY (5+1)	Yes	Call TI	Level-3-260C-168 HR	-40 to 105	AM4376BZDNA80

Orderable part number	Status (1)	Material type (2)	Package | Pins	Package qty | Carrier	RoHS (3)	Lead finish/ Ball material (4)	MSL rating/ Peak reflow (5)	Op temp (°C)	Part marking (6)
AM4376BZDND100	Active	Production	NFBGA (ZDN) | 491	90 | JEDEC TRAY (5+1)	-	Call TI	Level-3-260C-168 HR	-40 to 90	AM4376BZDND100
AM4376BZDND100.B	Active	Production	NFBGA (ZDN) | 491	90 | JEDEC TRAY (5+1)	-	Call TI	Level-3-260C-168 HR	-40 to 90	AM4376BZDND100
AM4376BZDND30	Active	Production	NFBGA (ZDN) | 491	90 | JEDEC TRAY (5+1)	Yes	Call TI	Level-3-260C-168 HR	-40 to 90	AM4376BZDND30
AM4376BZDND30.B	Active	Production	NFBGA (ZDN) | 491	90 | JEDEC TRAY (5+1)	Yes	Call TI	Level-3-260C-168 HR	-40 to 90	AM4376BZDND30
AM4376BZDND80	Active	Production	NFBGA (ZDN) | 491	90 | JEDEC TRAY (5+1)	Yes	Call TI	Level-3-260C-168 HR	-40 to 90	AM4376BZDND80
AM4376BZDND80.B	Active	Production	NFBGA (ZDN) | 491	90 | JEDEC TRAY (5+1)	Yes	Call TI	Level-3-260C-168 HR	-40 to 90	AM4376BZDND80
AM4377BZDNA100	Active	Production	NFBGA (ZDN) | 491	90 | JEDEC TRAY (5+1)	-	Call TI	Level-3-260C-168 HR	-40 to 105	AM4377BZDNA100
AM4377BZDNA100.B	Active	Production	NFBGA (ZDN) | 491	90 | JEDEC TRAY (5+1)	-	Call TI	Level-3-260C-168 HR	-40 to 105	AM4377BZDNA100
AM4377BZDNA80	Active	Production	NFBGA (ZDN) | 491	90 | JEDEC TRAY (5+1)	Yes	Call TI	Level-3-260C-168 HR	-40 to 105	AM4377BZDNA80
AM4377BZDNA80.B	Active	Production	NFBGA (ZDN) | 491	90 | JEDEC TRAY (5+1)	Yes	Call TI	Level-3-260C-168 HR	-40 to 105	AM4377BZDNA80
AM4377BZDND100	Active	Production	NFBGA (ZDN) | 491	90 | JEDEC TRAY (5+1)	-	Call TI	Level-3-260C-168 HR	-40 to 90	AM4377BZDND100
AM4377BZDND100.B	Active	Production	NFBGA (ZDN) | 491	90 | JEDEC TRAY (5+1)	-	Call TI	Level-3-260C-168 HR	-40 to 90	AM4377BZDND100
AM4377BZDND80	Active	Production	NFBGA (ZDN) | 491	90 | JEDEC TRAY (5+1)	Yes	Call TI	Level-3-260C-168 HR	-40 to 90	AM4377BZDND80
AM4377BZDND80.B	Active	Production	NFBGA (ZDN) | 491	90 | JEDEC TRAY (5+1)	Yes	Call TI	Level-3-260C-168 HR	-40 to 90	AM4377BZDND80
AM4378BZDN100	Active	Production	NFBGA (ZDN) | 491	90 | JEDEC TRAY (5+1)	-	Call TI	Level-3-260C-168 HR	0 to 90	AM4378BZDN100
AM4378BZDN100.B	Active	Production	NFBGA (ZDN) | 491	90 | JEDEC TRAY (5+1)	-	Call TI	Level-3-260C-168 HR	0 to 90	AM4378BZDN100
AM4378BZDN80	Active	Production	NFBGA (ZDN) | 491	90 | JEDEC TRAY (5+1)	Yes	Call TI	Level-3-260C-168 HR	0 to 90	AM4378BZDN80

Orderable part number	Status (1)	Material type (2)	Package | Pins	Package qty | Carrier	RoHS (3)	Lead finish/ Ball material (4)	MSL rating/ Peak reflow (5)	Op temp (°C)	Part marking (6)
AM4378BZDN80.B	Active	Production	NFBGA (ZDN) | 491	90 | JEDEC TRAY (5+1)	Yes	Call TI	Level-3-260C-168 HR	0 to 90	AM4378BZDN80
AM4378BZDNA100	Active	Production	NFBGA (ZDN) | 491	90 | JEDEC TRAY (5+1)	-	Call TI	Level-3-260C-168 HR	-40 to 105	AM4378BZDNA100
AM4378BZDNA100.B	Active	Production	NFBGA (ZDN) | 491	90 | JEDEC TRAY (5+1)	-	Call TI	Level-3-260C-168 HR	-40 to 105	AM4378BZDNA100
AM4378BZDNA80	Active	Production	NFBGA (ZDN) | 491	90 | JEDEC TRAY (5+1)	Yes	Call TI	Level-3-260C-168 HR	-40 to 105	AM4378BZDNA80
AM4378BZDNA80.B	Active	Production	NFBGA (ZDN) | 491	90 | JEDEC TRAY (5+1)	Yes	Call TI	Level-3-260C-168 HR	-40 to 105	AM4378BZDNA80
AM4378BZDND100	Active	Production	NFBGA (ZDN) | 491	90 | JEDEC TRAY (5+1)	-	Call TI	Level-3-260C-168 HR	-40 to 90	AM4378BZDND100
AM4378BZDND100.B	Active	Production	NFBGA (ZDN) | 491	90 | JEDEC TRAY (5+1)	-	Call TI	Level-3-260C-168 HR	-40 to 90	AM4378BZDND100
AM4378BZDND80	Active	Production	NFBGA (ZDN) | 491	90 | JEDEC TRAY (5+1)	Yes	Call TI	Level-3-260C-168 HR	-40 to 90	AM4378BZDND80
AM4378BZDND80.B	Active	Production	NFBGA (ZDN) | 491	90 | JEDEC TRAY (5+1)	Yes	Call TI	Level-3-260C-168 HR	-40 to 90	AM4378BZDND80
AM4379BZDNA100	Active	Production	NFBGA (ZDN) | 491	90 | JEDEC TRAY (5+1)	-	Call TI	Level-3-260C-168 HR	-40 to 105	AM4379BZDNA100
AM4379BZDNA100.B	Active	Production	NFBGA (ZDN) | 491	90 | JEDEC TRAY (5+1)	-	Call TI	Level-3-260C-168 HR	-40 to 105	AM4379BZDNA100
AM4379BZDNA80	Active	Production	NFBGA (ZDN) | 491	90 | JEDEC TRAY (5+1)	Yes	Call TI	Level-3-260C-168 HR	-40 to 105	AM4379BZDNA80
AM4379BZDNA80.B	Active	Production	NFBGA (ZDN) | 491	90 | JEDEC TRAY (5+1)	Yes	Call TI	Level-3-260C-168 HR	-40 to 105	AM4379BZDNA80

(1) **Status:** For more details on status, see our product life cycle.

(2) **Material type:** When designated, preproduction parts are prototypes/experimental devices, and are not yet approved or released for full production. Testing and final process, including without limitation quality assurance, reliability performance testing, and/or process qualification, may not yet be complete, and this item is subject to further changes or possible discontinuation. If available for ordering, purchases will be subject to an additional waiver at checkout, and are intended for early internal evaluation purposes only. These items are sold without warranties of any kind.

(3) **RoHS values:** Yes, No, RoHS Exempt. See the TI RoHS Statement for additional information and value definition.

(4) **Lead finish/Ball material:** Parts may have multiple material finish options. Finish options are separated by a vertical ruled line. Lead finish/Ball material values may wrap to two lines if the finish value exceeds the maximum column width.

(5) **MSL rating/Peak reflow:** The moisture sensitivity level ratings and peak solder (reflow) temperatures. In the event that a part has multiple moisture sensitivity ratings, only the lowest level per JEDEC standards is shown. Refer to the shipping label for the actual reflow temperature that will be used to mount the part to the printed circuit board.

(6) **Part marking:** There may be an additional marking, which relates to the logo, the lot trace code information, or the environmental category of the part.

Multiple part markings will be inside parentheses. Only one part marking contained in parentheses and separated by a "~" will appear on a part. If a line is indented then it is a continuation of the previous line and the two combined represent the entire part marking for that device.

Important Information and Disclaimer: The information provided on this page represents TI's knowledge and belief as of the date that it is provided. TI bases its knowledge and belief on information provided by third parties, and makes no representation or warranty as to the accuracy of such information. Efforts are underway to better integrate information from third parties. TI has taken and continues to take reasonable steps to provide representative and accurate information but may not have conducted destructive testing or chemical analysis on incoming materials and chemicals. TI and TI suppliers consider certain information to be proprietary, and thus CAS numbers and other limited information may not be available for release.

In no event shall TI's liability arising out of such information exceed the total purchase price of the TI part(s) at issue in this document sold by TI to Customer on an annual basis.

TRAY

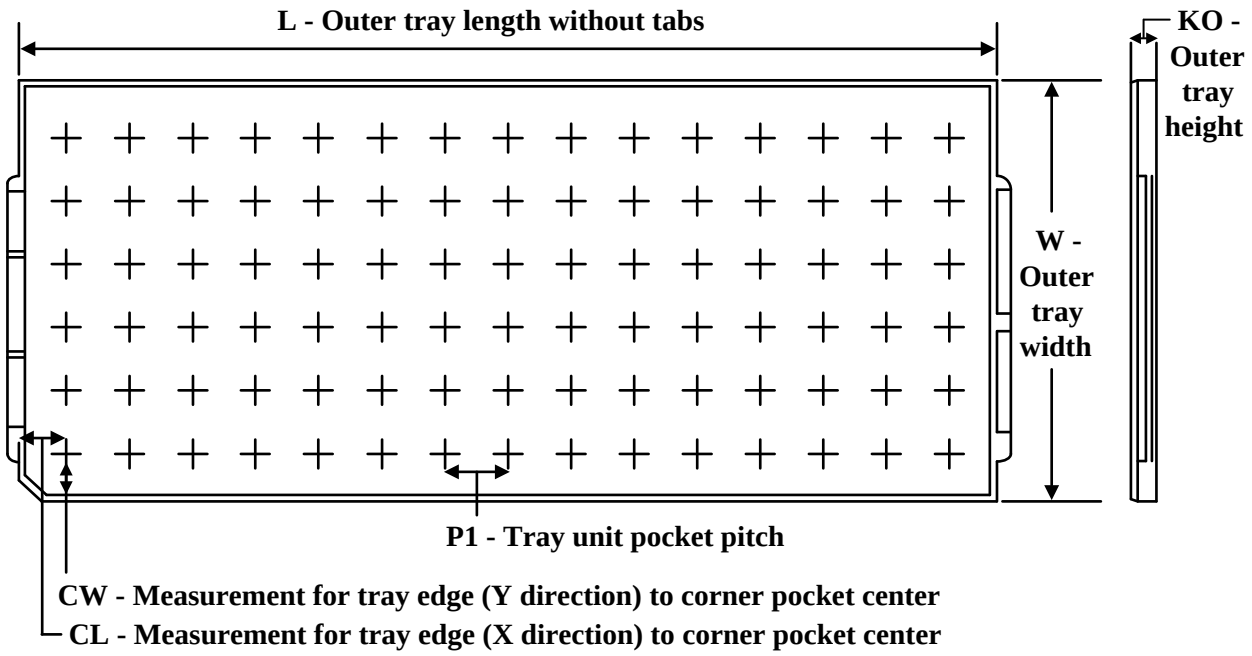

Chamfer on Tray corner indicates Pin 1 orientation of packed units.

*All dimensions are nominal

Device	Package Name	Package Type	Pins	SPQ	Unit array matrix	Max temperature (°C)	L (mm)	W (mm)	K0 (µm)	P1 (mm)	CL (mm)	CW (mm)
AM4372BZDN60	ZDN	NFBGA	491	90	6 X 15	150	315	135.9	7620	19.5	21	19.2
AM4372BZDN60.B	ZDN	NFBGA	491	90	6 X 15	150	315	135.9	7620	19.5	21	19.2
AM4372BZDN80	ZDN	NFBGA	491	90	6 X 15	150	315	135.9	7620	19.5	21	19.2
AM4372BZDN80.B	ZDN	NFBGA	491	90	6 X 15	150	315	135.9	7620	19.5	21	19.2
AM4372BZDNA60	ZDN	NFBGA	491	90	6 X 15	150	315	135.9	7620	19.5	21	19.2
AM4372BZDNA60.B	ZDN	NFBGA	491	90	6 X 15	150	315	135.9	7620	19.5	21	19.2
AM4372BZDNA80	ZDN	NFBGA	491	90	6 X 15	150	315	135.9	7620	19.5	21	19.2
AM4372BZDNA80.B	ZDN	NFBGA	491	90	6 X 15	150	315	135.9	7620	19.5	21	19.2
AM4376BZDN100	ZDN	NFBGA	491	90	6 X 15	150	315	135.9	7620	19.5	21	19.2
AM4376BZDN100.B	ZDN	NFBGA	491	90	6 X 15	150	315	135.9	7620	19.5	21	19.2
AM4376BZDN80	ZDN	NFBGA	491	90	6 X 15	150	315	135.9	7620	19.5	21	19.2
AM4376BZDN80.B	ZDN	NFBGA	491	90	6 X 15	150	315	135.9	7620	19.5	21	19.2
AM4376BZDNA100	ZDN	NFBGA	491	90	6 X 15	150	315	135.9	7620	19.5	21	19.2
AM4376BZDNA100.B	ZDN	NFBGA	491	90	6 X 15	150	315	135.9	7620	19.5	21	19.2
AM4376BZDNA80	ZDN	NFBGA	491	90	6 X 15	150	315	135.9	7620	19.5	21	19.2
AM4376BZDNA80.B	ZDN	NFBGA	491	90	6 X 15	150	315	135.9	7620	19.5	21	19.2
AM4376BZDND100	ZDN	NFBGA	491	90	6 X 15	150	315	135.9	7620	19.5	21	19.2

Device	Package Name	Package Type	Pins	SPQ	Unit array matrix	Max temperature (°C)	L (mm)	W (mm)	K0 (µm)	P1 (mm)	CL (mm)	CW (mm)
AM4376BZDND100.B	ZDN	NFBGA	491	90	6 X 15	150	315	135.9	7620	19.5	21	19.2
AM4376BZDND30	ZDN	NFBGA	491	90	6 X 15	150	315	135.9	7620	19.5	21	19.2
AM4376BZDND30.B	ZDN	NFBGA	491	90	6 X 15	150	315	135.9	7620	19.5	21	19.2
AM4376BZDND80	ZDN	NFBGA	491	90	6 X 15	150	315	135.9	7620	19.5	21	19.2
AM4376BZDND80.B	ZDN	NFBGA	491	90	6 X 15	150	315	135.9	7620	19.5	21	19.2
AM4377BZDNA100	ZDN	NFBGA	491	90	6 X 15	150	315	135.9	7620	19.5	21	19.2
AM4377BZDNA100.B	ZDN	NFBGA	491	90	6 X 15	150	315	135.9	7620	19.5	21	19.2
AM4377BZDNA80	ZDN	NFBGA	491	90	6 X 15	150	315	135.9	7620	19.5	21	19.2
AM4377BZDNA80.B	ZDN	NFBGA	491	90	6 X 15	150	315	135.9	7620	19.5	21	19.2
AM4377BZDND100	ZDN	NFBGA	491	90	6 X 15	150	315	135.9	7620	19.5	21	19.2
AM4377BZDND100.B	ZDN	NFBGA	491	90	6 X 15	150	315	135.9	7620	19.5	21	19.2
AM4377BZDND80	ZDN	NFBGA	491	90	6 X 15	150	315	135.9	7620	19.5	21	19.2
AM4377BZDND80.B	ZDN	NFBGA	491	90	6 X 15	150	315	135.9	7620	19.5	21	19.2
AM4378BZDN100	ZDN	NFBGA	491	90	6 X 15	150	315	135.9	7620	19.5	21	19.2
AM4378BZDN100.B	ZDN	NFBGA	491	90	6 X 15	150	315	135.9	7620	19.5	21	19.2
AM4378BZDN80	ZDN	NFBGA	491	90	6 X 15	150	315	135.9	7620	19.5	21	19.2
AM4378BZDN80.B	ZDN	NFBGA	491	90	6 X 15	150	315	135.9	7620	19.5	21	19.2
AM4378BZDNA100	ZDN	NFBGA	491	90	6 X 15	150	315	135.9	7620	19.5	21	19.2
AM4378BZDNA100.B	ZDN	NFBGA	491	90	6 X 15	150	315	135.9	7620	19.5	21	19.2
AM4378BZDNA80	ZDN	NFBGA	491	90	6 X 15	150	315	135.9	7620	19.5	21	19.2
AM4378BZDNA80.B	ZDN	NFBGA	491	90	6 X 15	150	315	135.9	7620	19.5	21	19.2
AM4378BZDND100	ZDN	NFBGA	491	90	6 X 15	150	315	135.9	7620	19.5	21	19.2
AM4378BZDND100.B	ZDN	NFBGA	491	90	6 X 15	150	315	135.9	7620	19.5	21	19.2
AM4378BZDND80	ZDN	NFBGA	491	90	6 X 15	150	315	135.9	7620	19.5	21	19.2
AM4378BZDND80.B	ZDN	NFBGA	491	90	6 X 15	150	315	135.9	7620	19.5	21	19.2
AM4379BZDNA100	ZDN	NFBGA	491	90	6 X 15	150	315	135.9	7620	19.5	21	19.2
AM4379BZDNA100.B	ZDN	NFBGA	491	90	6 X 15	150	315	135.9	7620	19.5	21	19.2
AM4379BZDNA80	ZDN	NFBGA	491	90	6 X 15	150	315	135.9	7620	19.5	21	19.2
AM4379BZDNA80.B	ZDN	NFBGA	491	90	6 X 15	150	315	135.9	7620	19.5	21	19.2

ZDN (S–PBGA–N491) PLASTIC BALL GRID ARRAY

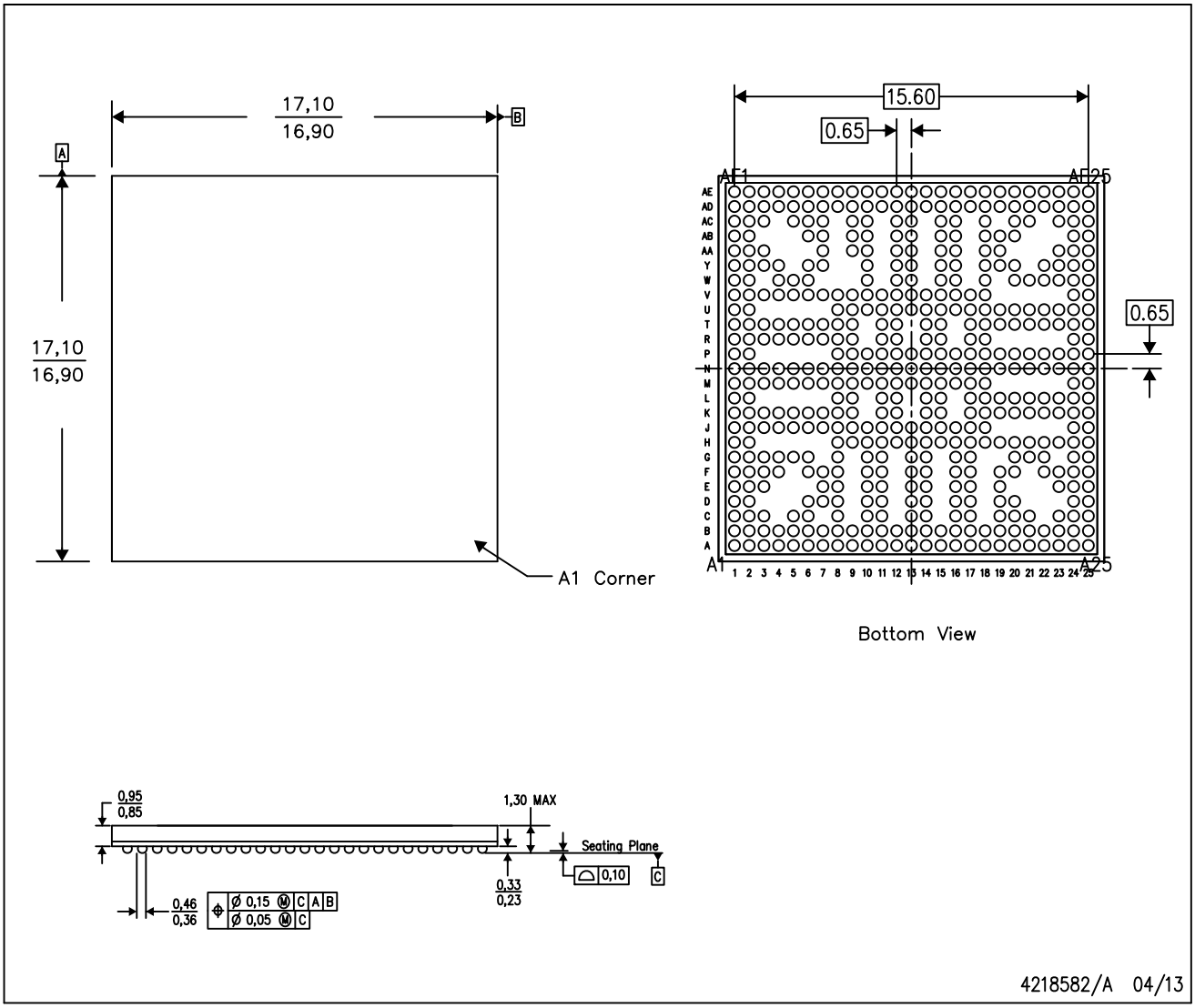

NOTES:
A. All linear dimensions are in millimeters. Dimensioning and tolerancing per ASME Y14.5M–1994.
B. This drawing is subject to change without notice.
C. nFBGA package configuration.
D. This is a Pb–free solder ball design.

IMPORTANT NOTICE AND DISCLAIMER

TI PROVIDES TECHNICAL AND RELIABILITY DATA (INCLUDING DATASHEETS), DESIGN RESOURCES (INCLUDING REFERENCE DESIGNS), APPLICATION OR OTHER DESIGN ADVICE, WEB TOOLS, SAFETY INFORMATION, AND OTHER RESOURCES “AS IS” AND WITH ALL FAULTS, AND DISCLAIMS ALL WARRANTIES, EXPRESS AND IMPLIED, INCLUDING WITHOUT LIMITATION ANY IMPLIED WARRANTIES OF MERCHANTABILITY, FITNESS FOR A PARTICULAR PURPOSE OR NON-INFRINGEMENT OF THIRD PARTY INTELLECTUAL PROPERTY RIGHTS.

These resources are intended for skilled developers designing with TI products. You are solely responsible for (1) selecting the appropriate TI products for your application, (2) designing, validating and testing your application, and (3) ensuring your application meets applicable standards, and any other safety, security, regulatory or other requirements.

These resources are subject to change without notice. TI grants you permission to use these resources only for development of an application that uses the TI products described in the resource. Other reproduction and display of these resources is prohibited. No license is granted to any other TI intellectual property right or to any third party intellectual property right. TI disclaims responsibility for, and you fully indemnify TI and its representatives against any claims, damages, costs, losses, and liabilities arising out of your use of these resources.

TI’s products are provided subject to TI’s Terms of Sale, TI’s General Quality Guidelines, or other applicable terms available either on ti.com or provided in conjunction with such TI products. TI’s provision of these resources does not expand or otherwise alter TI’s applicable warranties or warranty disclaimers for TI products. Unless TI explicitly designates a product as custom or customer-specified, TI products are standard, catalog, general purpose devices.

TI objects to and rejects any additional or different terms you may propose.

Copyright © 2026, Texas Instruments Incorporated

Last updated 10/2025