Technical White Paper

Benefits of Dual CAN FD in Automotive Microcontrollers

Ethan Bloom

Abstract

This paper examines the architectural advantages and system benefits of integrating dual CAN FD controllers into a single, cost-optimized microcontroller (MCU) for automotive electrical/electronic (E/E) systems. MCUs in this class are commonly used in body control modules, lighting controllers, seat and door modules, actuator control nodes, and satellite and bridging nodes. These types of applications demand robust communication but remain highly cost sensitive. This paper first reviews the foundational role of CAN and CAN FD in vehicle networks, then explores how dual CAN FD interfaces at this MCU class unlock network topologies, communication redundancy, bus isolation, and bridging capabilities. These benefits are typically accessible only through more complex SoCs or discrete external CAN controllers. Three case studies covering typical applications (for example, body control, actuator redundancy, and bus bridging) demonstrate how dual CAN FD MCUs enable safer, more flexible, and potentially more cost-effective node designs within this cost envelope. The conclusion of this discussion is that dual CAN FD integration is a key enabling technology for cost-optimized MCUs, allowing system designers to improve fault tolerance, consolidate node count, and increase design flexibility without stepping up to a larger, costlier MCU or SoC.

Table of Contents

1 Introduction 2
2 CAN Applications in Automotive 2
2.1 Where CAN is Used in Vehicles 2
2.2 The Role of CAN in Evolving Architectures 2
3 Benefits of Dual CAN FD 3
3.1 Network Topologies Enabled at the MCU Level 3
3.2 Redundancy 4
3.3 Bus Isolation and Segmentation 5
3.4 Gateway and Bridging 6
4 Conclusion 6
Resources 7

Trademarks

Arm®, Cortex®, and TrustZone® are registered trademarks of Arm Limited (or its subsidiaries or affiliates) in the US and/or elsewhere.
All trademarks are the property of their respective owners.

Copyright © 2026 Texas Instruments Incorporated

1 Introduction

Controller area network (CAN) and associated extension, CAN with flexible data-rate (CAN FD), are foundational communication protocols in modern vehicle networks, enabling multiple nodes to share a single, two-wire bus with deterministic, noise-tolerant message arbitration. Readers unfamiliar with the fundamentals of CAN and CAN FD are encouraged to review the TI application note *Introduction to the Controller Area Network (CAN)* for foundational background before continuing.

This paper assumes a working knowledge of CAN and CAN FD fundamentals, and instead focuses on a more specific question: what architectural and system-level advantages become available when two CAN FD controllers are integrated into a single, cost-optimized MCU, rather than only a single CAN FD controller? MCUs of this class are widely deployed in body control modules, lighting controllers, seat and door modules, actuator control nodes, and bus-bridging nodes. In such applications, cost sensitivity often constricts network topologies, forcing trade-offs in redundancy, isolation, and network flexibility.

2 CAN Applications in Automotive

CAN buses are found across nearly every major system in a modern vehicle. Cost-effective packages that combine noise tolerance and deterministic behavior are excellent for applications ranging from low-speed body control functions to higher-speed powertrain and chassis control.

2.1 Where CAN is Used in Vehicles

Modern automobiles, especially automobiles with advanced features, can have as many as ten separate CAN buses in a single vehicle. Common vehicle systems that rely on CAN communication include:

- **Powertrain**: Engine control units, automatic transmissions, and battery management systems (BMS) all rely on CAN for real-time coordination and dependable transmission of critical control parameters.
- **Chassis and Safety**: Anti-lock braking systems (ABS), electronic stability control (ESC), and electric power steering (EPS) benefit from low latency communications for wheel speed, yaw rate, and torque data to deliver a smooth driving experience.
- **Body Control and Comfort**: Body control modules (BCMs) manage lighting, power windows, HVAC, seat position, door locks, and more. Basic CAN implementations are a lower-cost answer for the modest data requirements of these systems.
- **Infotainment and Telematics**: Head units and telematic control units use CAN to receive vehicle state information for display and reporting, especially in legacy vehicle architectures.
- **ADAS**: Advanced driver assistance systems use CAN to share object detection results, lane data, and system status updates between sensors, processors, and actuators.

A key characteristic of CAN that makes CAN excellent across all of these domains is the multi-controller bus topology. Multiple ECUs connect to the same two-wire bus, and any node can initiate a transmission at any time without needing permission from a central controller. Through multi-controller arbitration, rather than simple message broadcasting, CAN provides reliability in time-critical systems. Combined with the simplicity of the 2-wire bus architecture, this characteristic reduces wiring complexity and streamlines node addition and removal on a given bus.

2.2 The Role of CAN in Evolving Architectures

Across various E/E system architectures, CAN serves as the reliable, communication medium at the edge of the network. Specifically, CAN FD has emerged as a providing better balance between speed and simplicity for many applications. As vehicle systems become more complex, the edge nodes of these vehicle systems become more complex. However, the broader trend across vehicle E/E architectures is toward simplifying the edge. Processing and decision-making are increasingly centralized into zone controllers and high-performance compute modules, while edge nodes focus on efficient sensing, actuation, and communication. This trend is also driving interest in technologies like 10BASE-T1S Ethernet, which supports remote control protocols that remove software and logic from the edge node entirely.

Within this simplification trend, dual CAN FD on a cost-optimized MCU remains compelling. Edge nodes do not need to do more; many edge nodes simply require robust, redundant, or bridged communication to function reliably within these architectures. A node that can simultaneously participate in two independent CAN FD

Copyright © 2026 Texas Instruments Incorporated

networks gains capabilities, such as redundancy, isolation, and bridging, without requiring additional processing complexity or a larger, costlier MCU.

3 Benefits of Dual CAN FD

The following sections present various benefits from using an MCU with two CAN FD controllers integrated. A microcontroller with multiple CAN FD interfaces is not novel; but real value is added by the class of MCU used to implement this strategy. Complex SoCs or external CAN controllers typically increase the overall system cost and complexity, but in using a relatively simple MCU with dual CAN FD, the following benefits can be applied across more nodes and systems. There are various products across the MSP portfolio, such as the MSPM0G3519-Q1 and MSPM33C321A-Q1 device, that implement dual CAN FD interfaces.

3.1 Network Topologies Enabled at the MCU Level

A single CAN interface constrains an individual ECU node to membership on exactly one bus segment. A linear bus can potentially have many ECUs sharing a single network, but the single CAN interface constrains the ECU to the limits of this bus. If the bus loses connection, or is busy, the ECU is virtually isolated. Dual CAN FD removes this constraint and unlocks diverse topologies previously impractical at the near-edge level.

Ring or Loop Configuration

In a ring or loop topology, like the simple loop shown in Figure 3-1, each node sits between two bus segments. With dual CAN FD, an MCU can receive traffic from one segment and selectively forward the traffic to the next segment, forming a chain of intelligent nodes. A standard CAN bus is a shared multi-drop segment; whereas, an MCU creating a connection between two separate buses forms a topology typically referred to as a *daisy-chain*.

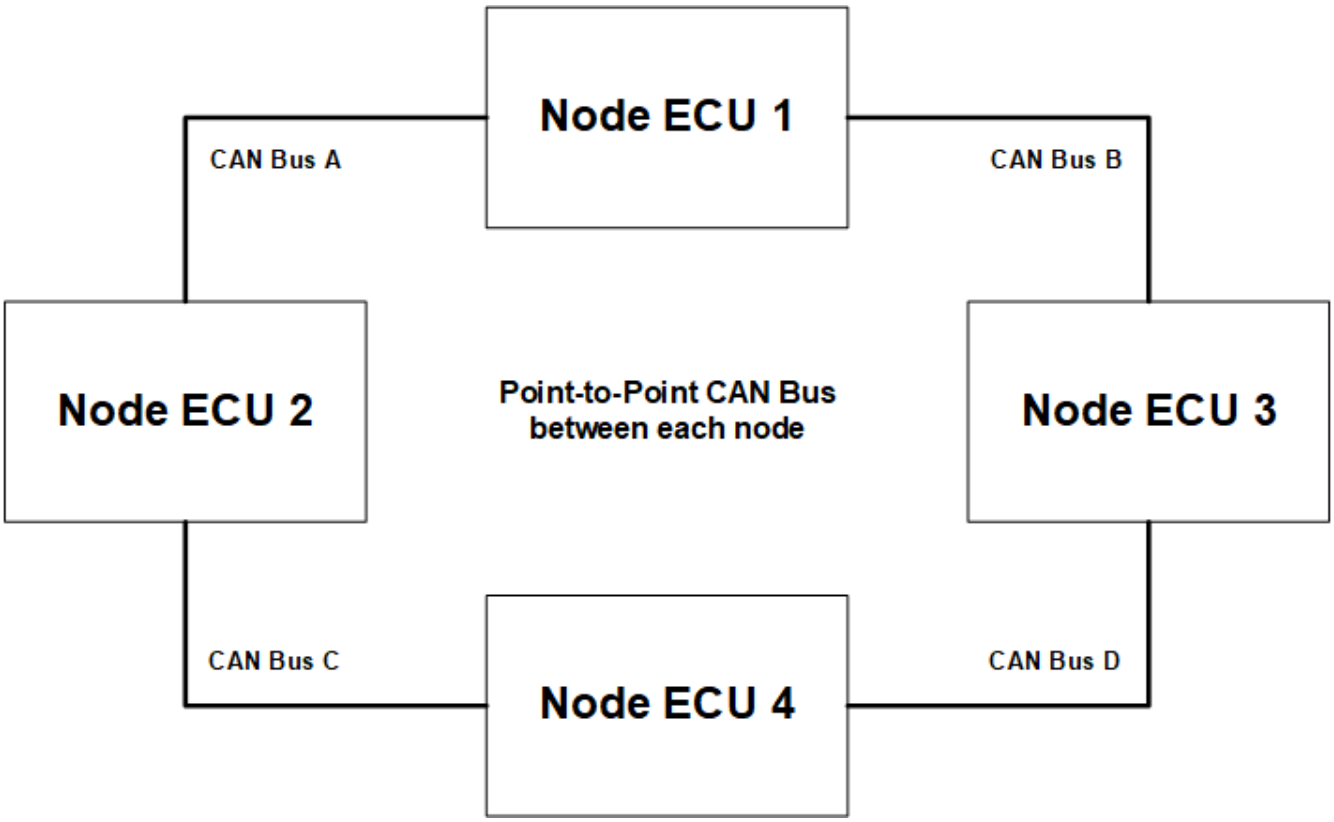

Figure 3-1. Simple Loop Configuration of CAN Buses Between Nodes

A tree topology uses a central node (or small number of nodes) to branch communication out to multiple sub-buses. A dual CAN FD MCU can act as a branch point; by residing on a higher-level backbone bus while simultaneously managing a local sub-bus of lower-level nodes, a network hierarchy can be created. This is an

Copyright © 2026 Texas Instruments Incorporated

appropriate fit for zonal architectures, where one controller aggregates many downstream local functions before communicating upstream, such as in the example shown in Figure 3-2.

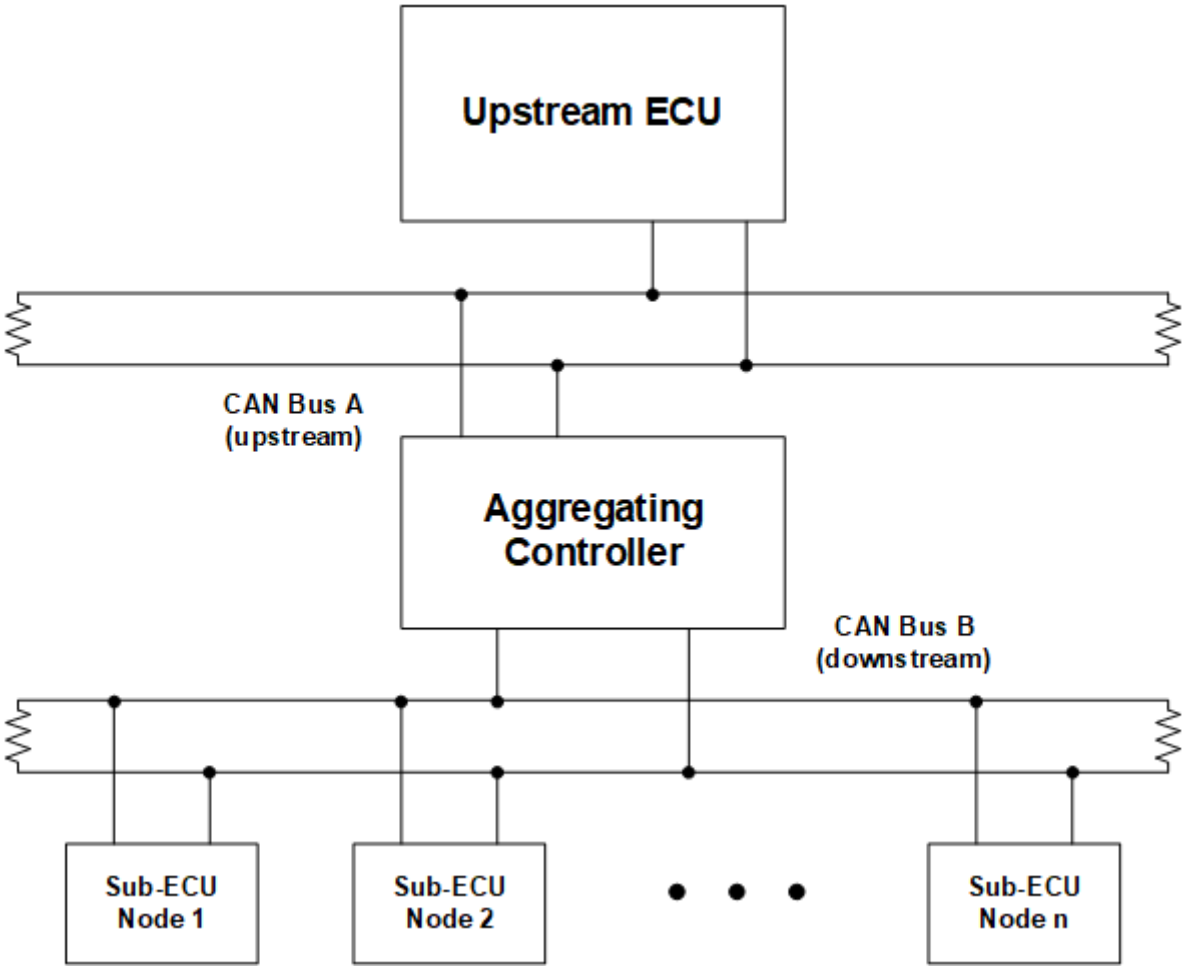

Figure 3-2. Tree Configuration of Sub-Nodes Being Aggregated to an Upstream Bus

3.2 Redundancy

In any system where safety is a key consideration, redundancy by design is often a requirement. Safety-critical automotive systems, in particular, require fault-tolerant communication. With dual CAN FD, a single MCU can be connected to two physically independent bus networks carrying the same or mirrored traffic. If one bus suffers a fault, the MCU can automatically rely on the secondary bus, maintaining communication continuity. This approach supports ISO 26262 functional safety requirements for systems requiring ASIL B or higher ratings, without adding a secondary MCU or external redundancy logic.

Case Study 1: Reliable Adaptive Suspension

Scenario: An MCU manages the adaptive variable suspension (AVS) in a high-end vehicle. The MCU must receive commands from the driver/vehicle computer and monitor local sensor data to decide the appropriate damping level based on the driving conditions.

Problem: Two primary challenges arise; the first is electrical noise resulting from actuator motors potentially corrupting data packets. The second challenge is that a single wiring fault potentially prevents the driver from changing modes or leaves the suspension stuck in an inappropriate setting.

Dual CAN FD Answer: The AVS MCU uses separate CAN FD interfaces to protect different types of information and creates a redundant data path. Interface A is dedicated to the high-priority vehicle state data and commands

Copyright © 2026 Texas Instruments Incorporated

sent to the dampers. Interface B is dedicated to local feedback, such as actuator position sensing or road-surface vibrations; see Figure 3-3 for an illustration.

Outcome: Both problems are addressed. By separating signals, potential noise and corruption are better mitigated. Additionally, by having a second physical connection between the MCU and the suspension subsystem, if a fault or failure occurs, critical commands can still be sent and received.

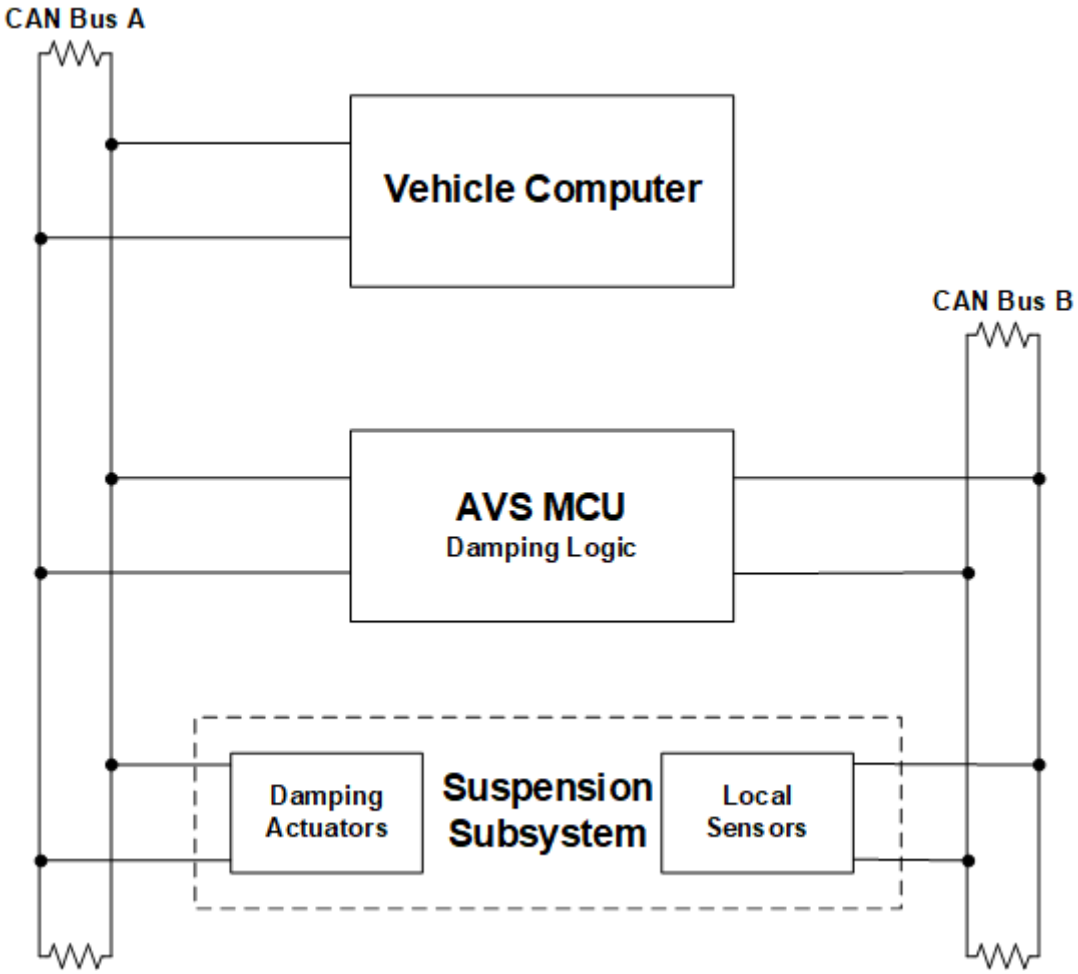

Figure 3-3. Dual Interface Architecture for AVS System

3.3 Bus Isolation and Segmentation

In large, complex networks, a fault on one segment (such as a node continuously transmitting, and thus, consuming bus bandwidth) can degrade or halt communication across the entire shared bus. Dual CAN FD in an MCU allows the controller to act as a firewall between two bus segments. The MCU monitors both buses independently and can selectively allow or block message forwarding based on parameters such as message ID, priority, or detected error conditions. This option provides:

- **Fault containment**: An errant node on one segment cannot directly disrupt the other segment. When combining containment and redundancy, a robust communication architecture is created.
- **Traffic shaping**: High-frequency local traffic (for example, a sensor polling on a local sub-bus) does not pollute the higher-level vehicle backbone.
- **Security boundary enforcement**: In centralized architectures, where security is a major concern, the MCU can act as an enforcement point, filtering messages that are not meant to cross segment boundaries and providing a gate between private and public CAN buses.

Copyright © 2026 Texas Instruments Incorporated

Case Study 2: Zonal Guard

Scenario: A basic zonal ECU in the *Rear Zone* manages both the rear liftgate motor and the rear ultrasonic parking sensors.

Problem: The liftgate motor is a high-inductance load that, in a fault condition, can short or otherwise disrupt the CAN bus segment (for example, a stuck-at fault or a wiring short). The parking sensors require continuous, deterministic access to associated buses to maintain accurate distance measurements. If both subsystems share a single bus, a fault on the motor side potentially blocks or degrades sensor communication, even though the two functions have no logical relationship to one another.

Dual CAN FD Answer: The zonal MCU, such as the MSPM33C321A-Q1, uses Interface A for the body control bus (liftgate motor) and Interface B for the sensor bus (parking sensors). By keeping these two segments physically separate at the MCU, a software hang or a physical fault on the motor bus cannot block or blind the parking sensor bus.

Outcome: A fault isolation challenge is solved using a single, cost-optimized MCU capable of meeting ASIL B requirements. Dual CAN FD is used to segment subsystems with distinct fault domains, and 10BASE-T1S Ethernet can be used over a SPI to a device like the DP83TD555-Q1 for upstream communication.

3.4 Gateway and Bridging

Perhaps the most architecturally significant benefit of dual CAN FD is the ability to perform CAN-to-CAN gatewaying entirely within a single, cost-optimized MCU. A gateway node receives messages on one CAN FD interface, processes or translates these messages, and re-transmits the messages on the second interface. This process enables:

- **Protocol bridging**: Connecting a legacy CAN 2.0 sub-network to a higher-speed CAN FD backbone allows older nodes to remain functional as the network evolves.
- **Message routing**: Selectively forwarding only the messages relevant to each segment reduces bus load on both sides of the controller.
- **Data aggregation**: Collecting data from multiple local nodes on a single bus, consolidating the data, and transmitting a single upstream message streamlines the backbone traffic.
- **Encryption**: Receiving a message and applying a new form of encryption before passing the message along to the next node improves security between vehicle systems and components.

In domain-based architectures, this gateway role was historically played by a larger, more expensive domain controller. Dual CAN FD in near-edge MCUs pushes this intelligence down the hierarchy, reducing the processing burden on central controllers and enabling more modular, distributed system designs.

Case Study 3: Smart Translator

Scenario: An OEM is upgrading a lighting subsystem in a mid-range vehicle that requires a value-engineering redesign.

Problem: The OEM is moving to high-speed CAN FD for the main bus to support more data, but the existing LED driver modules are built on legacy CAN 2.0. Simply connecting the legacy CAN 2.0 node to the CAN FD bus is possible but creates a *slowest common denominator* bottleneck, potentially degrading the performance of the entire backbone.

Dual CAN FD Answer: The OEM uses a small, cost-optimized MCU, such as the MSPM0G3518-Q1, as a domain gateway. Interface A connects to the CAN FD backbone, handling high-speed data and large payloads; Interface B connects to the local CAN 2.0 sub-bus near the edge node. This sub-bus is dedicated solely to the legacy *slow* lighting devices.

Outcome: By avoiding a re-engineering exercise of the lighting ECUs, and with minimal impact to the BOM, the new CAN FD backbone can be implemented to full effect.

4 Conclusion

This paper demonstrated that providing dual CAN FD interfaces within a cost-optimized, small-form-factor MCU is not an incremental improvement, but a fundamental architectural enabler. By integrating two

Copyright © 2026 Texas Instruments Incorporated

CAN FD controllers into a single edge MCU, engineers can implement sophisticated network topologies, achieve redundancy for safety-critical systems, and provide robust fault isolation between differing electrical environments. Furthermore, the ability to perform localized gatewaying and protocol bridging at the edge reduces the computational burden on central domain controllers and allows for the seamless integration of legacy components into modern high-speed networks. Ultimately, dual CAN FD MCUs offer a highly efficient path for OEMs to meet rising complexity and safety standards while maintaining control over system cost and complexity.

Resources

- Texas Instruments (2026). *Getting Started With the MCAN (CAN FD) Module on MSPM0 MCUs* application note.
- Texas Instruments (2016). *Introduction to the Controller Area Network (CAN)* application note.
- Texas Instruments. *MSPM0G3519-Q1 Automotive 80MHz Arm®Cortex®-M0+ MCU with 512kB flash, 128kB SRAM, 2 CAN, 2 ADC, DAC, COMP* product page.
- Texas Instruments. *MSPM33C321A-Q1 Automotive 160MHz Arm® Cortex®-M33 MCU with TrustZone®, 1MB flash, 256kB SRAM, QSPI and Security* product page.

Copyright © 2026 Texas Instruments Incorporated

IMPORTANT NOTICE AND DISCLAIMER

TI PROVIDES TECHNICAL AND RELIABILITY DATA (INCLUDING DATASHEETS), DESIGN RESOURCES (INCLUDING REFERENCE DESIGNS), APPLICATION OR OTHER DESIGN ADVICE, WEB TOOLS, SAFETY INFORMATION, AND OTHER RESOURCES “AS IS” AND WITH ALL FAULTS, AND DISCLAIMS ALL WARRANTIES, EXPRESS AND IMPLIED, INCLUDING WITHOUT LIMITATION ANY IMPLIED WARRANTIES OF MERCHANTABILITY, FITNESS FOR A PARTICULAR PURPOSE OR NON-INFRINGEMENT OF THIRD PARTY INTELLECTUAL PROPERTY RIGHTS.

These resources are intended for skilled developers designing with TI products. You are solely responsible for (1) selecting the appropriate TI products for your application, (2) designing, validating and testing your application, and (3) ensuring your application meets applicable standards, and any other safety, security, regulatory or other requirements.

These resources are subject to change without notice. TI grants you permission to use these resources only for development of an application that uses the TI products described in the resource. Other reproduction and display of these resources is prohibited. No license is granted to any other TI intellectual property right or to any third party intellectual property right. TI disclaims responsibility for, and you fully indemnify TI and its representatives against any claims, damages, costs, losses, and liabilities arising out of your use of these resources.

TI’s products are provided subject to TI’s Terms of Sale, TI’s General Quality Guidelines, or other applicable terms available either on ti.com or provided in conjunction with such TI products. TI’s provision of these resources does not expand or otherwise alter TI’s applicable warranties or warranty disclaimers for TI products. Unless TI explicitly designates a product as custom or customer-specified, TI products are standard, catalog, general purpose devices.

TI objects to and rejects any additional or different terms you may propose.

Copyright © 2026, Texas Instruments Incorporated

Last updated 10/2025