AMC3330-Q1 Automotive, Precision, ±1V Input, Reinforced Isolated Amplifier With Integrated DC/DC Converter

1 Features

- AEC-Q100 qualified for automotive applications:
  - Temperature grade 1: –40°C to 125°C, T_A
- 3.3V or 5V single supply operation with integrated DC/DC converter
- ±1V input voltage range optimized for voltage measurements with high input impedance
- Fixed gain: 2.0
- Low DC errors:
  - Gain error: ±0.2% (max)
  - Gain drift: ±45ppm/°C (max)
  - Offset error: ±0.3mV (max)
  - Offset drift: ±4µV/°C (max)
  - Nonlinearity: ±0.02% (max)
- High CMTI: 85kV/µs (min)
- System-level diagnostic features
- Safety-related certifications:
  - 6000V_{PK} reinforced isolation per DIN EN IEC 60747-17 (VDE 0884-17)
  - 4250V_{RMS} isolation for 1 minute per UL1577
- Meets CISPR-11 and CISPR-25 EMI standards

2 Applications

- Isolated voltage sensing in:
  - HEV/EV onboard chargers (OBC)
  - HEV/EV DC/DC converters
  - HEV/EV traction inverters
  - HEV/EV battery management systems (BMS)

3 Description

The AMC3330-Q1 is a precision, isolated amplifier with a fully integrated, isolated DC/DC converter that allows single-supply operation from the low-side of the device. The reinforced capacitive isolation barrier is certified according to DIN EN IEC 60747-17 (VDE 0884-17) and UL1577 and separates sections of the system that operate on different common-mode voltage levels and protects low-voltage domains from damage.

The input of the AMC3330-Q1 is optimized for direct connection to high-impedance, voltage-signal sources such as a resistor-divider network to sense high-voltage signals. The integrated isolated DC/DC converter allows measurement of non-ground-referenced signals and makes the device a unique solution for noisy, space-constrained applications.

The excellent performance of the device supports accurate voltage monitoring and control. The integrated DC/DC converter fault-detection and diagnostic output pin of the AMC3330-Q1 simplify system-level design and diagnostics.

The AMC3330-Q1 is specified over the temperature range of –40°C to +125°C.

Package Information

PART NUMBER	PACKAGE(1)	PACKAGE SIZE(2)
AMC3330-Q1	DWE (SOIC, 16)	10.3mm × 10.3mm

(1) For more information, see the *Mechanical, Packaging, and Orderable Information*.
(2) The package size (length × width) is a nominal value and includes pins, where applicable.

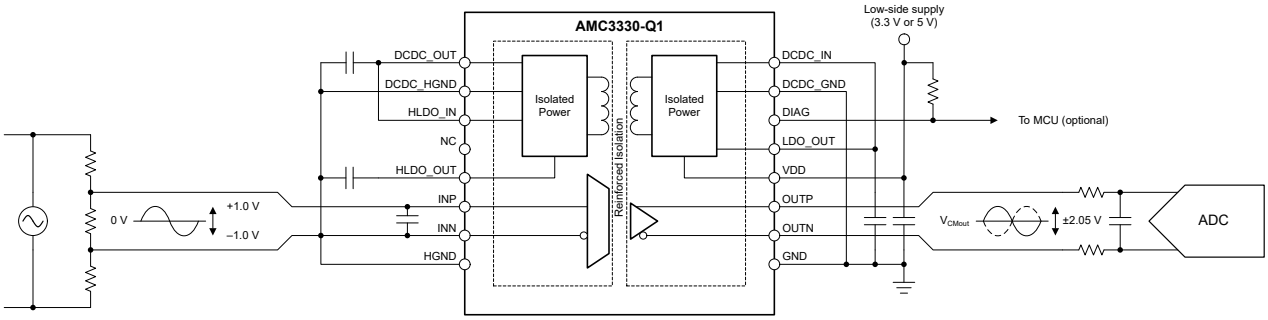

Application Example

An IMPORTANT NOTICE at the end of this data sheet addresses availability, warranty, changes, use in safety-critical applications, intellectual property matters and other important disclaimers. PRODUCTION DATA.

Table of Contents

1 Features....1
2 Applications....1
3 Description....1
4 Pin Configuration and Functions....3
5 Specifications....4
5.1 Absolute Maximum Ratings....4
5.2 ESD Ratings....4
5.3 Recommended Operating Conditions....4
5.4 Thermal Information....5
5.5 Power Ratings....5
5.6 Insulation Specifications....6
5.7 Safety-Related Certifications....7
5.8 Safety Limiting Values....7
5.9 Electrical Characteristics....8
5.10 Switching Characteristics....9
5.11 Timing Diagram....10
5.12 Insulation Characteristics Curves....11
5.13 Typical Characteristics....12
6 Detailed Description....18
6.1 Overview....18
6.2 Functional Block Diagram....18
6.3 Feature Description....18
6.4 Device Functional Modes....22
7 Application and Implementation....23
7.1 Application Information....23
7.2 Typical Application....23
7.3 Best Design Practices....27
7.4 Power Supply Recommendations....27
7.5 Layout....29
8 Device and Documentation Support....30
8.1 Device Support....30
8.2 Documentation Support....30
8.3 Receiving Notification of Documentation Updates....30
8.4 Support Resources....30
8.5 Trademarks....30
8.6 Electrostatic Discharge Caution....30
8.7 Glossary....30
9 Revision History....31
10 Mechanical, Packaging, and Orderable Information....31

Copyright © 2024 Texas Instruments Incorporated

4 Pin Configuration and Functions

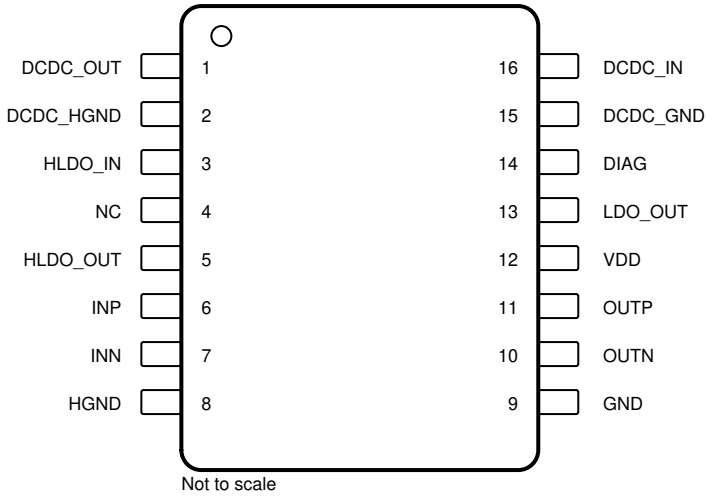

Figure 4-1. DWE Package, 16-Pin SOIC (Top View)

Table 4-1. Pin Functions

PIN		TYPE	DESCRIPTION
NO.	NAME		
1	DCDC_OUT	Power	High-side output of the isolated DC/DC converter; connect this pin to the HLDO_IN pin.(1)
2	DCDC_HGND	Power Ground	High-side ground reference for the isolated DC/DC converter; connect this pin to the HGND pin.
3	HLDO_IN	Power	Input of the high-side low-dropout (LDO) regulator; connect this pin to the DCDC_OUT pin.(1)
4	NC	—	No internal connection. Connect this pin to the high-side ground or leave this pin unconnected (floating).
5	HLDO_OUT	Power	Output of the high-side LDO.(1)
6	INP	Analog Input	Noninverting analog input.
7	INN	Analog Input	Inverting analog input. Connect this pin to HGND.
8	HGND	Signal Ground	High-side analog ground; connect this pin to the DCDC_HGND pin.
9	GND	Signal Ground	Low-side analog ground; connect this pin to the DCDC_GND pin.
10	OUTN	Analog Output	Inverting analog output.
11	OUTP	Analog Output	Noninverting analog output.
12	VDD	Power	Low-side power supply.(1)
13	LDO_OUT	Power	Output of the low-side LDO; connect this pin to the DCDC_IN pin.(1)
14	DIAG	Digital Output	Active-low, open-drain status indicator output; connect this pin to the pullup supply (for example, VDD) using a resistor or leave this pin floating if not used.
15	DCDC_GND	Power Ground	Low-side ground reference for the isolated DC/DC converter; connect this pin to the GND pin.
16	DCDC_IN	Power	Low-side input of the isolated DC/DC converter; connect this pin to the LDO_OUT pin.(1)

(1) See the *Power Supply Recommendations* section for power-supply decouplng recommendations.

Copyright © 2024 Texas Instruments Incorporated

5 Specifications

5.1 Absolute Maximum Ratings

see [1]

		MIN	MAX	UNIT
Power-supply voltage	VDD to GND	–0.3	6.5	V
Analog input voltage	INP, INN	HGND – 6	$V_{HLDOout}$ + 0.5	V
Analog output voltage	OUTP, OUTN	GND – 0.5	VDD + 0.5	V
Digital output voltage	DIAG	GND – 0.5	6.5	V
Input current	Continuous, any pin except power-supply pins	–10	10	mA
Temperature	Junction, T_J		150	°C
	Storage, T_{stg}	–65	150	

(1) Operation outside the *Absolute Maximum Ratings* may cause permanent device damage. *Absolute Maximum Ratings* do not imply functional operation of the device at these or any other conditions beyond those listed under *Recommended Operating Conditions*. If used outside the *Recommended Operating Conditions* but within the Absolute Maximum Ratings, the device may not be fully functional, and this may affect device reliability, functionality, performance, and shorten the device lifetime

5.2 ESD Ratings

			VALUE	UNIT
$V_{(ESD)}$	Electrostatic discharge	Human-body model (HBM), per AEC Q100-002[1], HBM ESD classification Level 2	±2000	V
		Charged-device model (CDM), per AEC Q100-011, CDM ESD classification Level C6	±1000	

(1) AEC Q100-002 indicates that HBM stressing shall be in accordance with the ANSI/ESDA/JEDEC JS-001 specification.

5.3 Recommended Operating Conditions

over operating ambient temperature range (unless otherwise noted)

			MIN	NOM	MAX	UNIT
POWER SUPPLY						
VDD	Low-side supply voltage	VDD to GND	3.0	3.3	5.5	V
ANALOG INPUT						
$V_{Clipping}$	Differential input voltage before clipping output	$V_{IN} = V_{INP} – V_{INN}$		±1.25		V
V_{FSR}	Specified linear differential full-scale voltage	$V_{IN} = V_{INP} – V_{INN}$	–1		1	V
	Absolute common-mode input voltage[1]	$(V_{INP} + V_{INN}) / 2$ to HGND	–2		3	V
V_{CM}	Operating common-mode input voltage	$(V_{INP} + V_{INN}) / 2$ to HGND, $V_{INP} = V_{INN}$	–1.4		1.6	V
		$(V_{INP} + V_{INN}) / 2$ to HGND, $\|V_{INP} – V_{INN}\| = 1.0$ V [2]	–0.925		0.725	
		$(V_{INP} + V_{INN}) / 2$ to HGND, $\|V_{INP} – V_{INN}\| = 1.25$ V	–0.8		0.6	
ANALOG OUTPUT						
C_{LOAD}	Capacitive load	On OUTP or OUTN to GND2, Without any series resistance			500	pF
C_{LOAD}	Capacitive load	OUTP to OUTN, Without any series resistance			250	pF
R_{LOAD}	Resistive load	On OUTP or OUTN to GND2		10	1	kΩ
DIGITAL OUTPUT						
	Pull-up supply-voltage for DIAG pin		0		VDD	V
TEMPERATURE RANGE						
T_A	Operating ambient temperature		–40	25	125	°C

(1) Steady-state voltage supported by the device in case of a system failure. See specified common-mode input voltage V_{CM} for normal operation. Observe analog input voltage range as specified in the *Absolute Maximum Ratings* table.
(2) Linear response.

Copyright © 2024 Texas Instruments Incorporated

5.4 Thermal Information

THERMAL METRIC[1]		AMC3330-Q1 DWE (SOIC) 16 PINS	UNIT
$R_{\theta JA}$	Junction-to-ambient thermal resistance	73.5	°C/W
$R_{\theta JC(top)}$	Junction-to-case (top) thermal resistance	31	°C/W
$R_{\theta JB}$	Junction-to-board thermal resistance	44	°C/W
ψ_{JT}	Junction-to-top characterization parameter	16.7	°C/W
ψ_{JB}	Junction-to-board characterization parameter	42.8	°C/W
$R_{\theta JC(bot)}$	Junction-to-case (bottom) thermal resistance	n/a	°C/W

(1) For more information about traditional and new thermal metrics, see the Semiconductor and IC Package Thermal Metrics application report.

5.5 Power Ratings

PARAMETER		TEST CONDITIONS	MIN	TYP	MAX	UNIT
P_D	Maximum power dissipation	VDD = 5.5 V			236.5	mW
		VDD = 3.6 V			155	

5.6 Insulation Specifications

over operating ambient temperature range (unless otherwise noted)

PARAMETER		TEST CONDITIONS	VALUE	UNIT
GENERAL				
CLR	External clearance[1]	Shortest pin-to-pin distance through air	≥ 8	mm
CPG	External creepage[1]	Shortest pin-to-pin distance across the package surface	≥ 8	mm
DTI	Distance through insulation	Minimum internal gap (internal clearance - capacitive signal isolation)	≥ 21	µm
DTI	Distance through insulation	Minimum internal gap (internal clearance - transformer power isolation)	≥ 120	µm
CTI	Comparative tracking index	DIN EN 60112 (VDE 0303-11); IEC 60112	≥ 600	V
	Material group	According to IEC 60664-1	I	
	Overvoltage category per IEC 60664-1	Rated mains voltage ≤ 600V_{RMS}	I-III	
		Rated mains voltage ≤ 1000V_{RMS}	I-II	
DIN EN IEC 60747-17 (VDE 0884-17)				
V_{IORM}	Maximum repetitive peak isolation voltage	At AC voltage	1700	V_{PK}
V_{IOWM}	Maximum-rated isolation working voltage	At AC voltage (sine wave)	1200	V_{RMS}
		At DC voltage	1700	V_{DC}
V_{IOTM}	Maximum transient isolation voltage	$V_{TEST} = V_{IOTM}$, t = 60s (qualification test), $V_{TEST} = 1.2 \times V_{IOTM}$, t = 1s (100% production test)	6000	V_{PK}
V_{IMP}	Maximum impulse voltage[2]	Tested in air, 1.2/50µs waveform per IEC 62368-1	7700	V_{PK}
V_{IOSM}	Maximum surge isolation voltage[3]	Tested in oil (qualification test), 1.2/50µs waveform per IEC 62368-1	10000	V_{PK}
q_{pd}	Apparent charge[4]	Method a, after input/output safety test subgroups 2 and 3, $V_{pd(ini)} = V_{IOTM}$, t_{ini} = 60s, $V_{pd(m)} = 1.2 \times V_{IORM}$, t_m = 10s	≤ 5	pC
		Method a, after environmental tests subgroup 1, $V_{pd(ini)} = V_{IOTM}$, t_{ini} = 60s, $V_{pd(m)} = 1.6 \times V_{IORM}$, t_m = 10 s	≤ 5	
		Method b1, at preconditioning (type test) and routine test, $V_{pd(ini)} = 1.2 \times V_{IOTM}$, t_{ini} = 1s, $V_{pd(m)} = 1.875 \times V_{IORM}$, t_m = 1s	≤ 5	
		Method b2, at routine test (100% production)[6], $V_{pd(ini)} = V_{pd(m)} = 1.2 \times V_{IOTM}$, $t_{ini} = t_m$ = 1s	≤ 5	
C_{IO}	Barrier capacitance, input to output[5]	V_{IO} = 0.5 V_{PP} at 1MHz	~4.5	pF
R_{IO}	Insulation resistance, input to output[5]	V_{IO} = 500 V at T_A = 25°C	> 10^{12}	Ω
		V_{IO} = 500 V at 100°C ≤ T_A ≤ 125°C	> 10^{11}	
		V_{IO} = 500 V at T_S = 150°C	> 10^{9}	
	Pollution degree		2	
	Climatic category		40/125/21	
UL1577				
V_{ISO}	Withstand isolation voltage	$V_{TEST} = V_{ISO}$, t = 60s (qualification test), $V_{TEST} = 1.2 \times V_{ISO}$, t = 1s (100% production test)	4250	V_{RMS}

(1) Apply creepage and clearance requirements according to the specific equipment isolation standards of an application.Maintain the creepage and clearance distance of a board design to make sure that the mounting pads of the isolator on the printed circuit board (PCB) do not reduce this distance. Creepage and clearance on a PCB become equal in certain cases. Techniques such as inserting grooves, ribs, or both on a PCB are used to help increase these specifications.
(2) Testing is carried out in air to determine the surge immunity of the package.
(3) Testing is carried in oil to determine the intrinsic surge immunity of the isolation barrier.
(4) Apparent charge is electrical discharge caused by a partial discharge (pd).
(5) All pins on each side of the barrier are tied together, creating a two-pin device.
(6) Either method b1 or b2 is used in production.

Copyright © 2024 Texas Instruments Incorporated

5.7 Safety-Related Certifications

VDE	UL
DIN EN IEC 60747-17 (VDE 0884-17), EN IEC 60747-17, DIN EN IEC 62368-1 (VDE 0868-1), EN IEC 62368-1, IEC 62368-1 Clause : 5.4.3 ; 5.4.4.4 ; 5.4.9	Recognized under 1577 component recognition and CSA component acceptance NO 5 programs
Reinforced insulation	Single protection
Certificate number: 40040142	File number: E181974

5.8 Safety Limiting Values

Safety limiting [(1)] intends to minimize potential damage to the isolation barrier upon failure of input or output circuitry. A failure of the I/O can allow low resistance to ground or the supply and, without current limiting, dissipate sufficient power to over-heat the die and damage the isolation barrier potentially leading to secondary system failures.

PARAMETER		TEST CONDITIONS	MIN	TYP	MAX	UNIT
I_S	Safety input, output, or supply current	$R_{\theta JA}$ = 73.5°C/W, VDD = 5.5 V, T_J = 150°C, T_A = 25°C			309	mA
		$R_{\theta JA}$ = 73.5°C/W, VDD = 3.6 V, T_J = 150°C, T_A = 25°C			472	
P_S	Safety input, output, or total power	$R_{\theta JA}$ = 73.5°C/W, T_J = 150°C, T_A = 25°C			1700	mW
T_S	Maximum safety temperature				150	°C

(1) The maximum safety temperature, T_S, has the same value as the maximum junction temperature, T_J, specified for the device. The I_S and P_S parameters represent the safety current and safety power, respectively. Do not exceed the maximum limits of I_S and P_S. These limits vary with the ambient temperature, T_A.
The junction-to-air thermal resistance, $R_{\theta JA}$, in the *Thermal Information* table is that of a device installed on a high-K test board for leaded surface-mount packages. Use these equations to calculate the value for each parameter:
$T_J = T_A + R_{\theta JA} \times P$, where P is the power dissipated in the device.
$T_{J(max)} = T_S = T_A + R_{\theta JA} \times P_S$, where $T_{J(max)}$ is the maximum junction temperature.
$P_S = I_S \times VDD_{max}$, where VDD_{max} is the maximum low-side voltage.

5.9 Electrical Characteristics

minimum and maximum specifications apply from T_A = –40°C to +125°C, VDD = 3.0 V to 5.5 V, INP = –1 V to +1 V, and INN = HGND = 0 V; typical specifications are at T_A = 25°C, and VDD = 3.3 V (unless otherwise noted)

PARAMETER		TEST CONDITIONS	MIN	TYP	MAX	UNIT
ANALOG INPUT						
R_{IN}	Single-ended input resistance	INN = HGND	0.1	0.8		GΩ
R_{IND}	Differential input resistance		0.1	1.2		
I_{IB}	Input bias current	INP = INN = HGND, I_{IB} = (I_{IBP} + I_{IBN}) / 2	–10	2.5	10	nA
TCI_{IB}	Input bias current drift			–14		pA/°C
I_{IO}	Input offset current	I_{IO} = I_{INP} – I_{INN}; INP = INN = HGND	–10	-0.8	10	nA
C_{IN}	Single-ended input capacitance	INN = HGND, f_{IN} = 310 kHz		2		pF
C_{IND}	Differential input capacitance	f_{IN} = 310 kHz		2		
ANALOG OUTPUT						
	Nominal gain			2		V/V
V_{CMout}	Common-mode output voltage		1.39	1.44	1.49	V
$V_{CLIPout}$	Clipping differential output voltage	V_{OUT} = (V_{OUTP} – V_{OUTN}); |V_{IN}| = |V_{INP} – V_{INN}| > $V_{Clipping}$		±2.49		V
$V_{Failsafe}$	Failsafe differential output voltage	V+ = (V_{OUTP} – V_{OUTN}); $V_{DCDCout}$ ≤ V_{DCDCUV} or $V_{HLDOout}$ ≤ V_{HLDOUV}		–2.57	–2.5	V
BW_{OUT}	Output bandwidth		300	375		kHz
R_{OUT}	Output resistance	On OUTP or OUTN		0.2		Ω
	Output short-circuit current	On OUTP or OUTN, sourcing or sinking, INP = INN = HGND, outputs shorted to either GND or VDD		14		mA
CMTI	Common-mode transient immunity	|HGND – GND| = 2 kV	85	135		kV/µs
ACCURACY						
V_{OS}	Input offset voltage(1) (2)	T_A = 25°C, INP = INN = HGND	–0.3	±0.05	0.3	mV
TCV_{OS}	Input offset drift(1) (2) (4)		–4	±1	4	µV/°C
E_G	Gain error	T_A = 25°C	–0.2%	–0.08%	0.2%	
TCE_G	Gain error drift(1) (5)		–45	±7	45	ppm/°C
	Nonlinearity		–0.02%	0.01%	0.02%	
	Nonlinearity drift			0.4		ppm/°C
SNR	Signal-to-noise ratio	V_{IN} = 2 V_{PP}, f_{IN} = 1 kHz, BW = 10 kHz, 10 kHz filter	81	85		dB
		V_{IN} = 2 V_{PP}, f_{IN} = 10 kHz, BW = 100 kHz, 1 MHz filter		72		
THD	Total harmonic distortion(3)	V_{IN} = 2 Vpp, f_{IN} = 10 kHz, BW = 100 kHz		–84		dB
	Output noise	INP = INN = HGND, f_{IN} = 0 Hz, BW = 100 kHz		250		$µV_{RMS}$
CMRR	Common-mode rejection ratio	f_{IN} = 0 Hz, $V_{CM\ min}$ ≤ V_{CM} ≤ $V_{CM\ max}$		–100		dB
		f_{IN} = 10 kHz, $V_{CM\ min}$ ≤ V_{CM} ≤ $V_{CM\ max}$		–86		
PSRR	Power-supply rejection ratio	VDD from 3.0 V to 5.5 V, at dc, input referred		–98		dB
		INP = INN = HGND, VDD from 3.0 V to 5.5 V, 10 kHz / 100 mV ripple, input referred		–86		
DIGITAL OUTPUT (DIAG)						
V_{OL}	Low-level output voltage	I_{SINK}= 4 mA		80	250	mV

Copyright © 2024 Texas Instruments Incorporated

5.9 Electrical Characteristics (continued)

minimum and maximum specifications apply from T_A = –40°C to +125°C, VDD = 3.0 V to 5.5 V, INP = –1 V to +1 V, and INN = HGND = 0 V; typical specifications are at T_A = 25°C, and VDD = 3.3 V (unless otherwise noted)

PARAMETER		TEST CONDITIONS	MIN	TYP	MAX	UNIT
I_{LKG}	Open-drain output leakage current	VDD = 5V		5	100	nA
POWER SUPPLY						
IDD	Low-side supply current	No external load on HLDO		28.5	41	mA
		1 mA external load on HLDO		30.5	43	mA
VDD_{UV}	VDD analog undervoltage detection threshold	VDD rising			2.9	V
		VDD falling			2.8	
VDD_{POR}	VDD digital reset threshold	VDD rising			2.5	V
		VDD falling			2.4	
V_{DCDC_OUT}	DC/DC output voltage	DCDC_OUT to HGND	3.1	3.5	4.65	V
V_{DCDCUV}	DC/DC output undervoltage detection threshold voltage	DCDC output falling	2.1	2.25		V
V_{HLDO_OUT}	High-side LDO output voltage	HLDO to HGND, up to 1 mA external load	3	3.2	3.4	V
V_{HLDOUV}	High-side LDO output undervoltage detection threshold voltage	HLDO output falling	2.4	2.6		V
I_H	High-side supply current for auxiliary circuitry	3 V ≤ VDD < 4.5 V, load connected from HLDO_OUT to HGND, non-switching			1	mA
		4.5 V ≤ VDD ≤ 5.5 V, load connected from HLDO_OUT to HGND, non-switching			4.3	
t_{AS}	Analog settling time	VDD step to 3.0 V, to OUTP and OUTN valid, 0.1% settling		0.6	1.1	ms

(1) The typical value includes one standard deviation ("sigma") at nominal operating conditons.
(2) This parameter is input referred.
(3) THD is the ratio of the rms sum of the amplitues of first five higher harmonics to the amplitude of the fundamental.
(4) Offset error temperature drift is calculated using the box method, as described by the following equation: $TCV_{OS} = (V_{OS,MAX} - V_{OS,MIN}) / TempRange$ where $V_{OS,MAX}$ and $V_{OS,MIN}$ refer to the maximum and minimum V_{OS} values measured within the temperature range (–40 to 125°C).
(5) Gain error temperature drift is calculated using the box method, as described by the following equation: $TCE_G\ (ppm) = ((E_{G,MAX} - E_{G,MIN}) / TempRange) \times 10^4$ where $E_{G,MAX}$ and $E_{G,MIN}$ refer to the maximum and minimum E_G values (in %) measured within the temperature range (–40 to 125°C).

5.10 Switching Characteristics

over operating ambient temperature range (unless otherwise noted)

PARAMETER		TEST CONDITIONS	MIN	TYP	MAX	UNIT
t_r	Output signal rise time			1.3		µs
t_f	Output signal fall time			1.3		µs
	V_{INx} to V_{OUTx} signal delay (50% – 10%)	Unfiltered output		1.2	1.3	µs
	V_{INx} to V_{OUTx} signal delay (50% – 50%)	Unfiltered output		1.6	2.1	µs
	V_{INx} to V_{OUTx} signal delay (50% – 90%)	Unfiltered output		2.2	2.6	µs

Copyright © 2024 Texas Instruments Incorporated

5.11 Timing Diagram

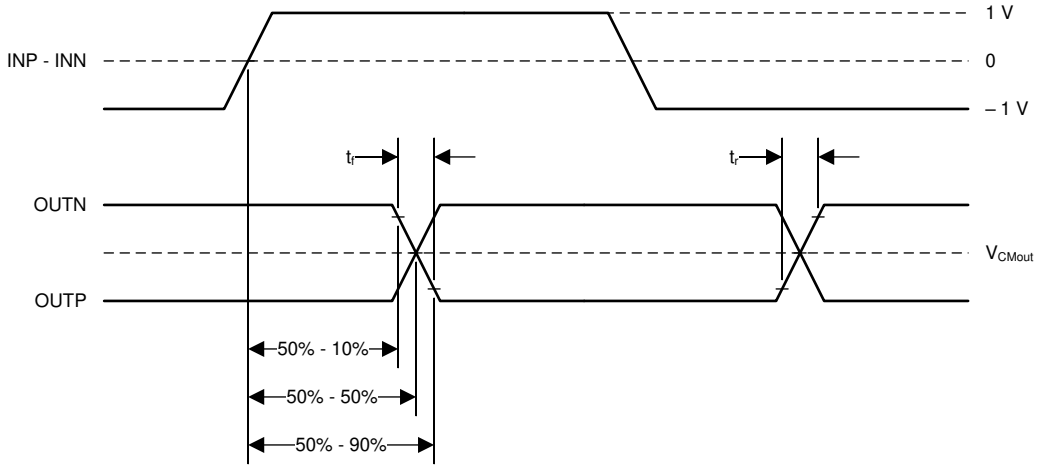

Figure 5-1. Rise, Fall, and Delay Time Waveforms

Copyright © 2024 Texas Instruments Incorporated

5.12 Insulation Characteristics Curves

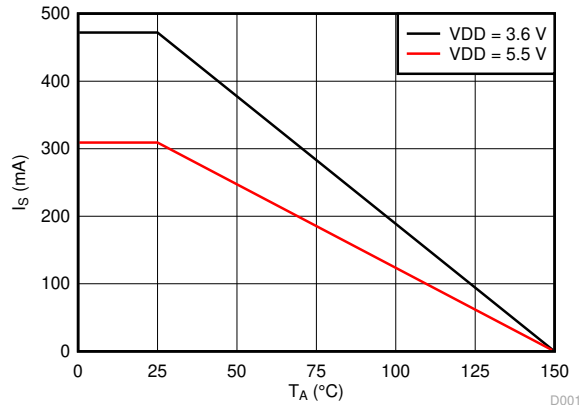

Figure 5-2. Thermal Derating Curve for Safety-Limiting Current per VDE

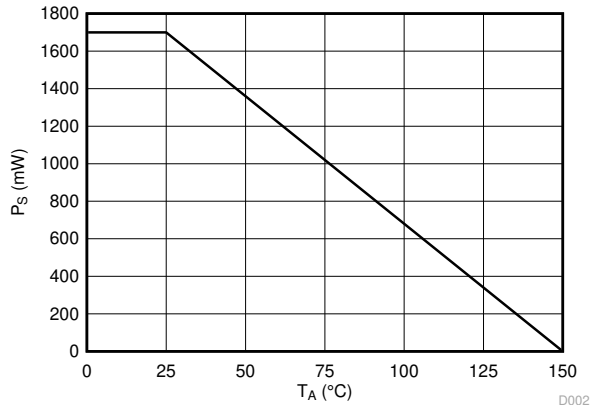

Figure 5-3. Thermal Derating Curve for Safety-Limiting Power per VDE

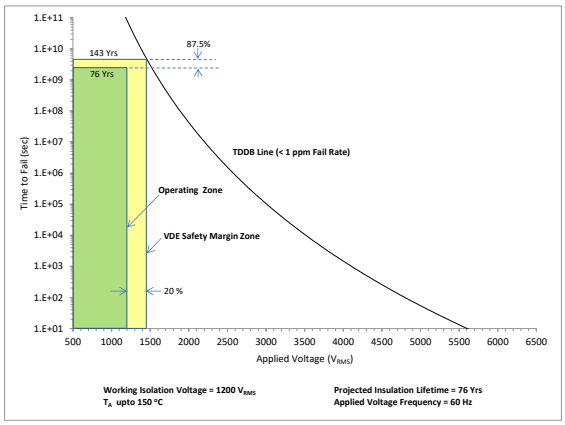

Figure 5-4. Reinforced Isolation Capacitor Lifetime Projection

5.13 Typical Characteristics

at VDD = 3.3 V, INP = –1 V to 1 V, INN = HGND = 0V, and f_{IN} = 10 kHz (unless otherwise noted)

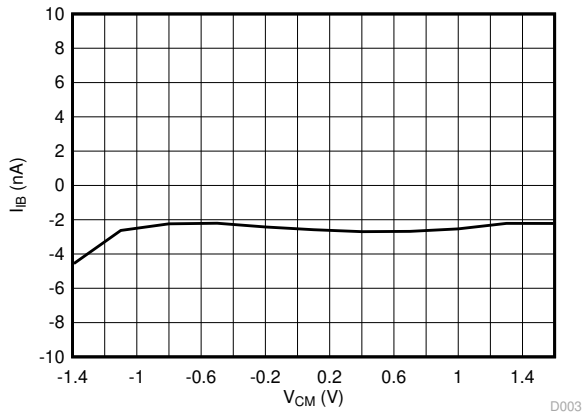

Figure 5-5. Input Bias Current vs Common-Mode Input Voltage

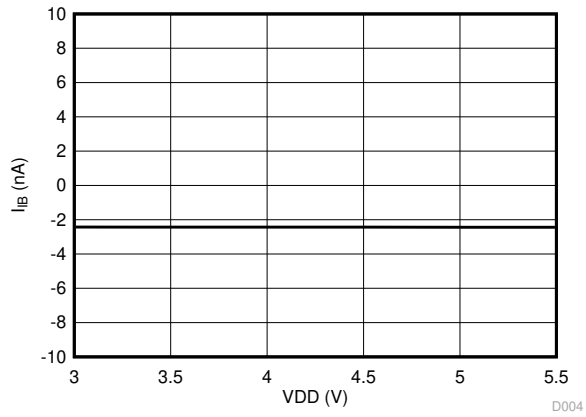

Figure 5-6. Input Bias Current vs Supply Voltage

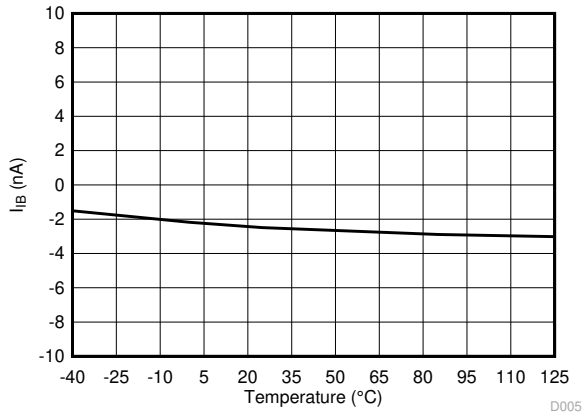

Figure 5-7. Input Bias Current vs Temperature

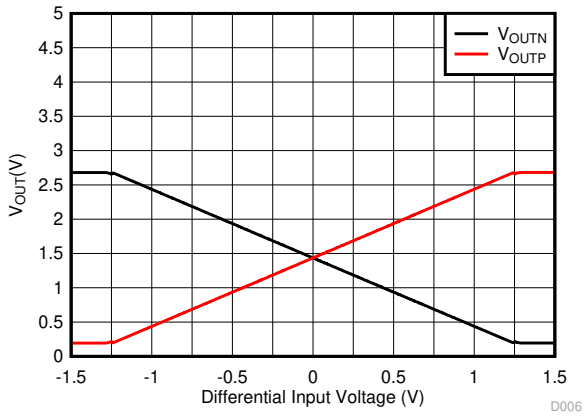

Figure 5-8. Output vs Differential Input Voltage

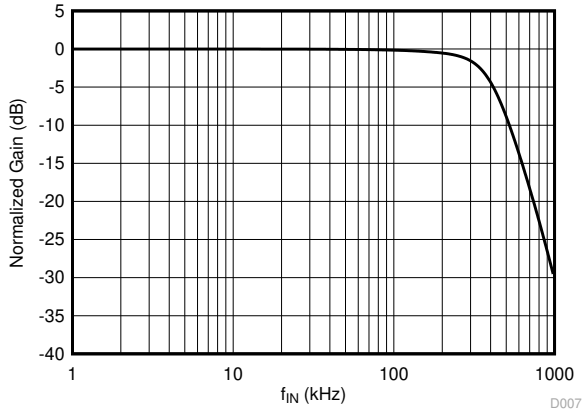

Figure 5-9. Normalized Gain vs Input Frequency

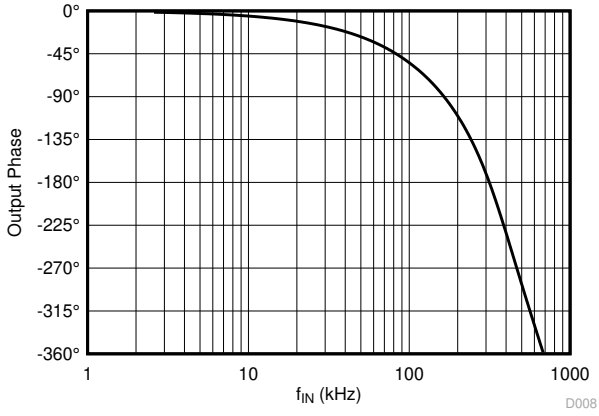

Figure 5-10. Output Phase vs Input Frequency

Copyright © 2024 Texas Instruments Incorporated

5.13 Typical Characteristics (continued)

at VDD = 3.3 V, INP = –1 V to 1 V, INN = HGND = 0V, and f_{IN} = 10 kHz (unless otherwise noted)

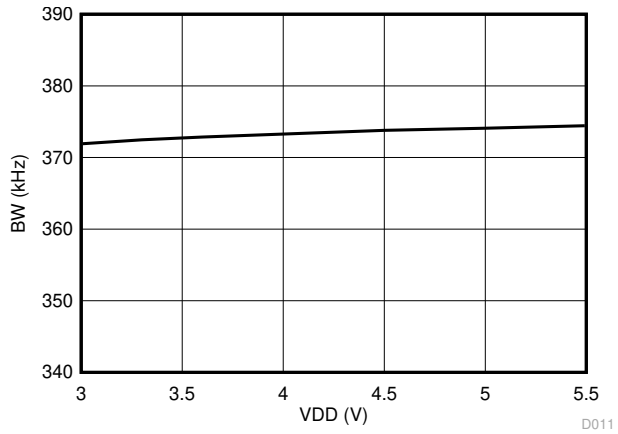

Figure 5-11. Output Bandwidth vs Supply Voltage

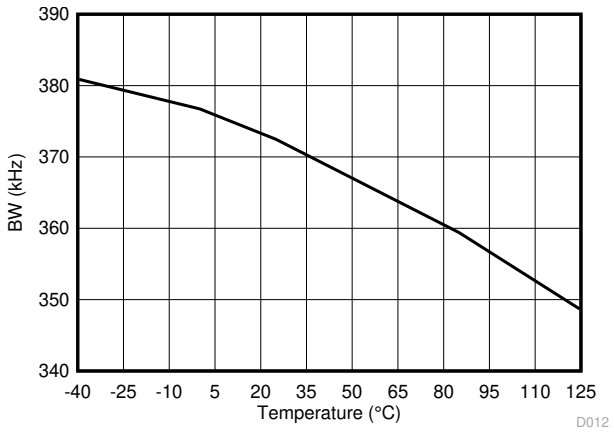

Figure 5-12. Output Bandwidth vs Temperature

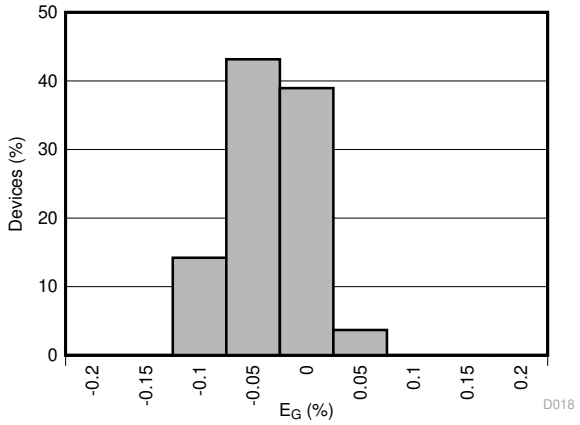

Figure 5-13. Gain Error Histogram

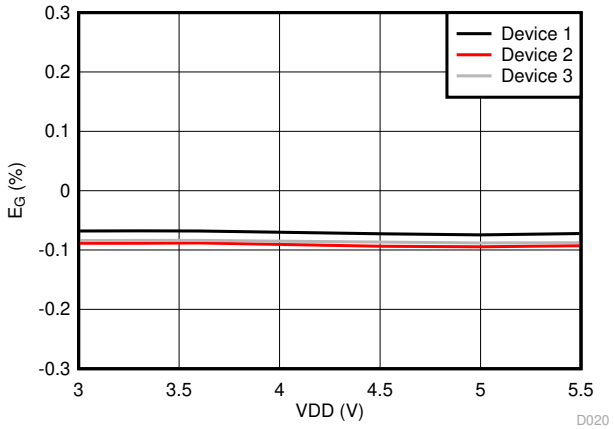

Figure 5-14. Gain Error vs Supply Voltage

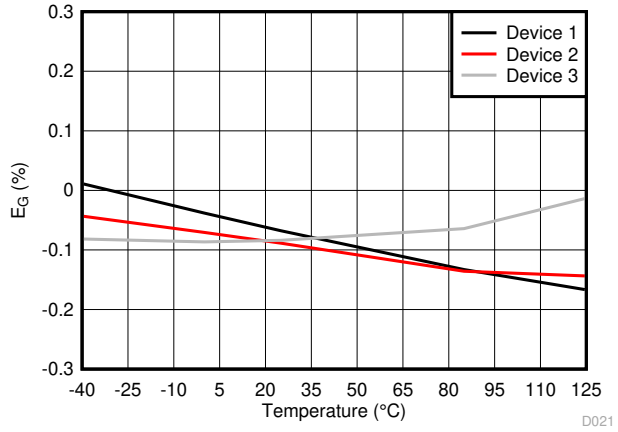

Figure 5-15. Gain Error vs Temperature

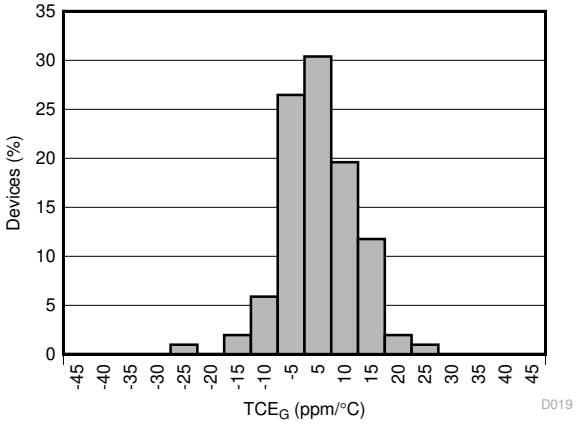

Figure 5-16. Gain Error Drift Histogram

5.13 Typical Characteristics (continued)

at VDD = 3.3 V, INP = –1 V to 1 V, INN = HGND = 0V, and f_{IN} = 10 kHz (unless otherwise noted)

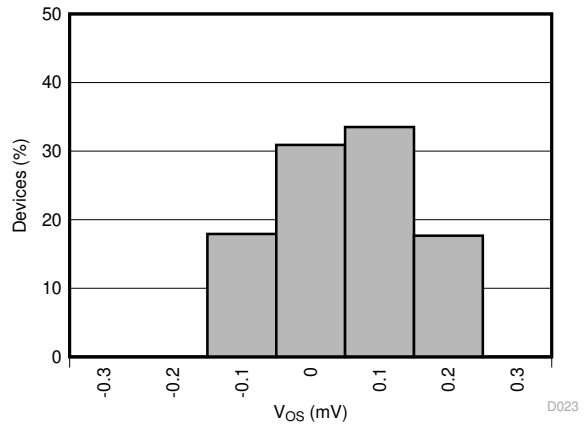

Figure 5-17. Offset Error Histogram

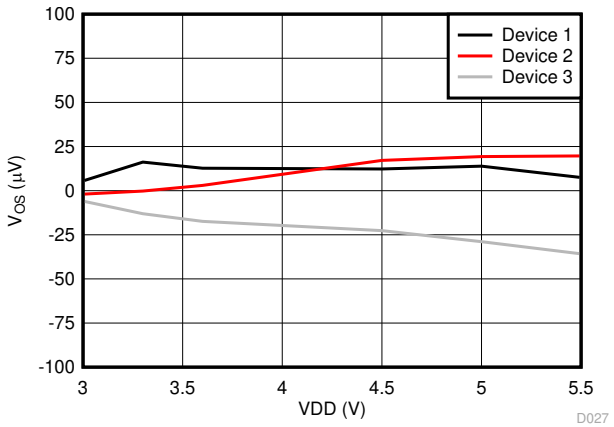

Figure 5-18. Offset Error vs Supply Voltage

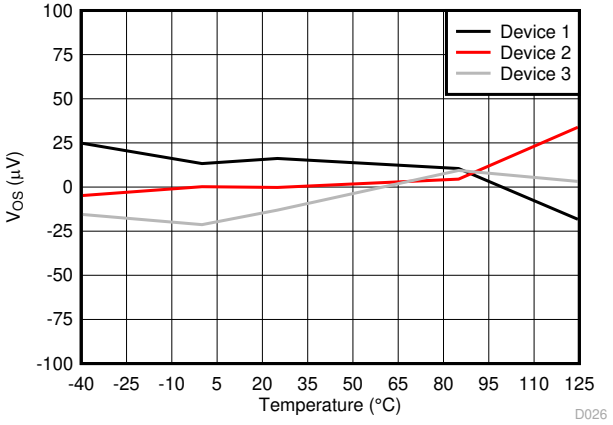

Figure 5-19. Offset Error vs Temperature

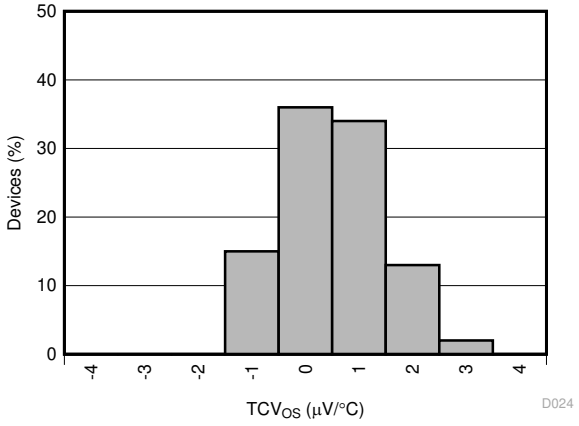

Figure 5-20. Offset Error Drift Histogram

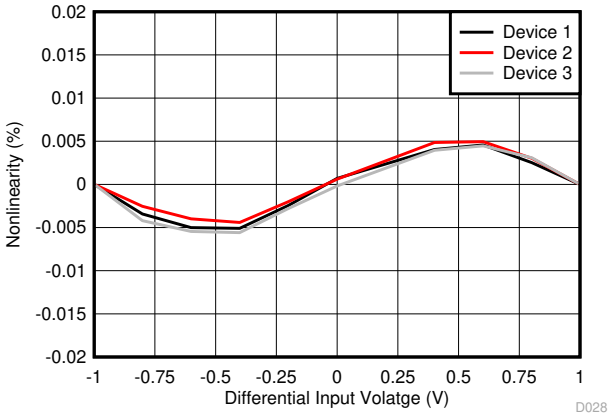

Figure 5-21. Nonlinearity vs Differential Input Voltage

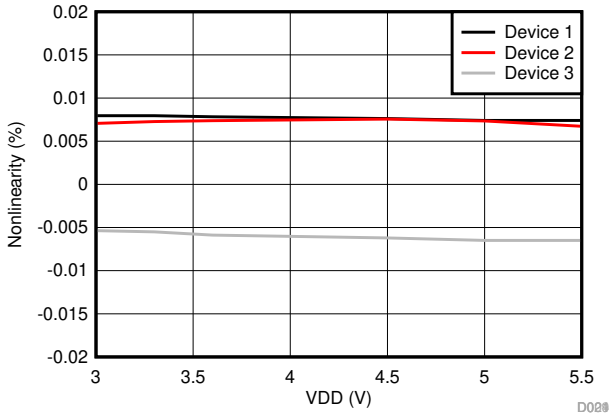

Figure 5-22. Nonlinearity vs Supply Voltage

Copyright © 2024 Texas Instruments Incorporated

5.13 Typical Characteristics (continued)

at VDD = 3.3 V, INP = –1 V to 1 V, INN = HGND = 0V, and f_{IN} = 10 kHz (unless otherwise noted)

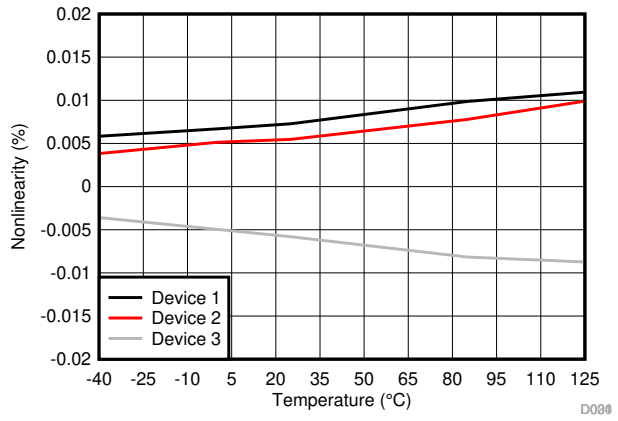

Figure 5-23. Nonlinearity vs Temperature

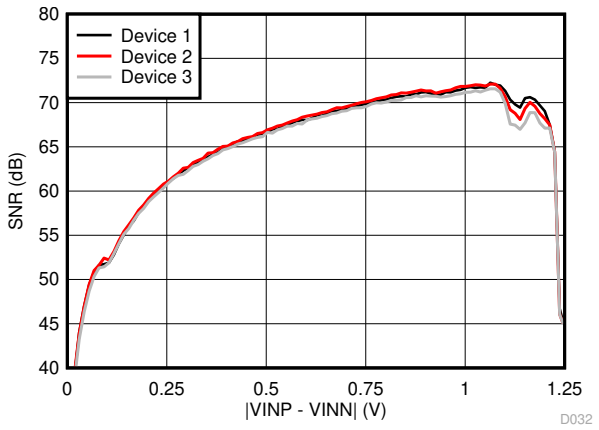

Figure 5-24. Signal to Noise Ratio vs Differential Input Voltage

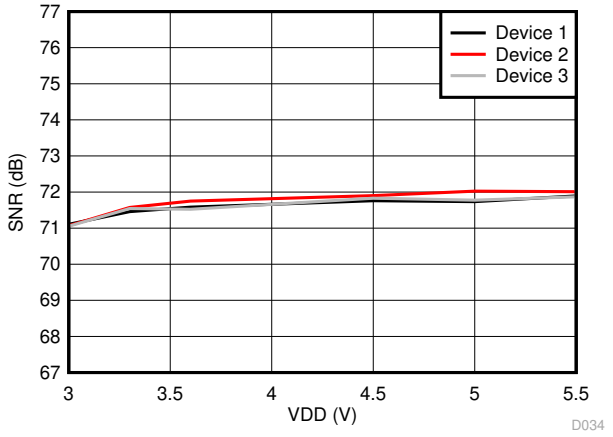

Figure 5-25. Signal to Noise Ratio vs Supply Voltage

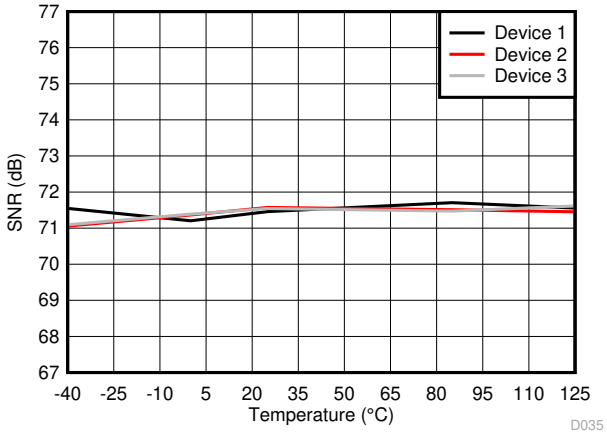

Figure 5-26. Signal to Noise Ratio vs Temperature

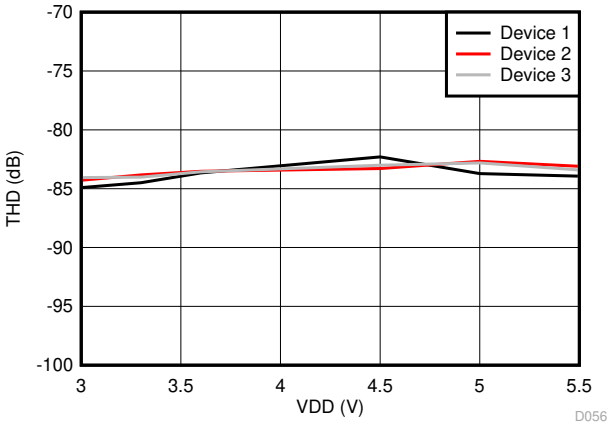

Figure 5-27. Total Harmonic Distortion vs Supply Voltage

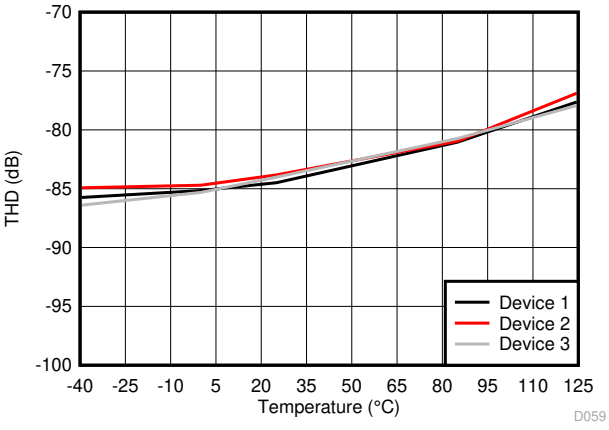

Figure 5-28. Total Harmonic Distortion vs Temperature

5.13 Typical Characteristics (continued)

at VDD = 3.3 V, INP = –1 V to 1 V, INN = HGND = 0V, and f_{IN} = 10 kHz (unless otherwise noted)

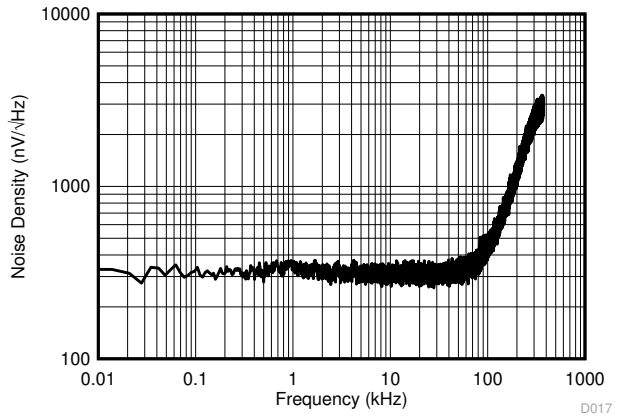

Figure 5-29. Input-Referred Noise Density vs Frequency

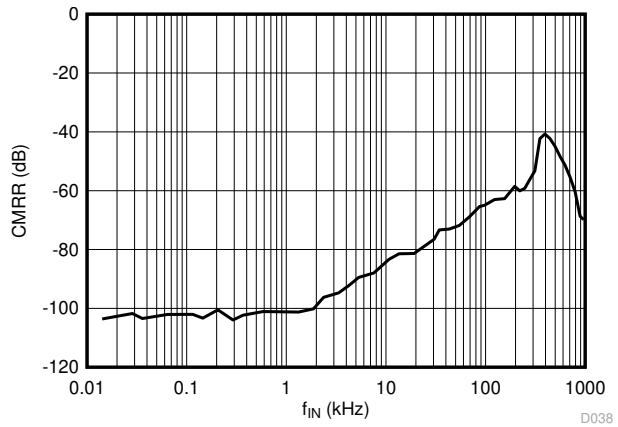

Figure 5-30. Common-Mode Rejection Ratio vs Input Frequency

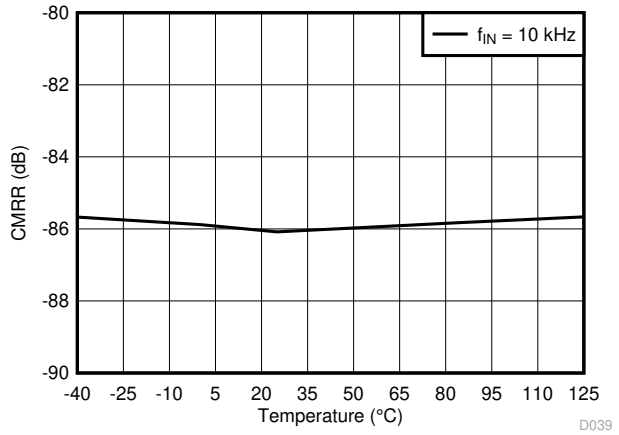

Figure 5-31. Common-Mode Rejection Ratio vs Temperature

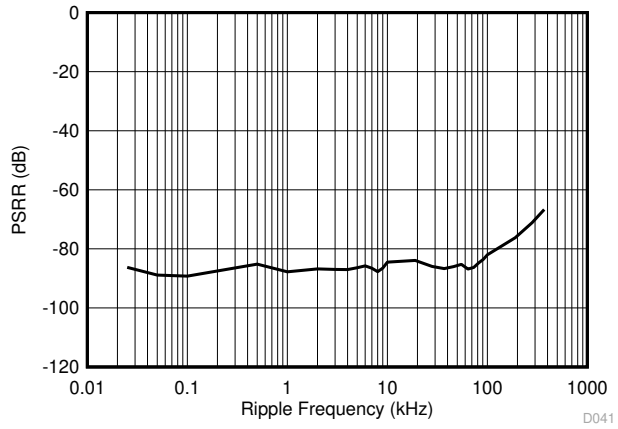

Figure 5-32. Power-Supply Rejection Ratio vs Ripple Frequency

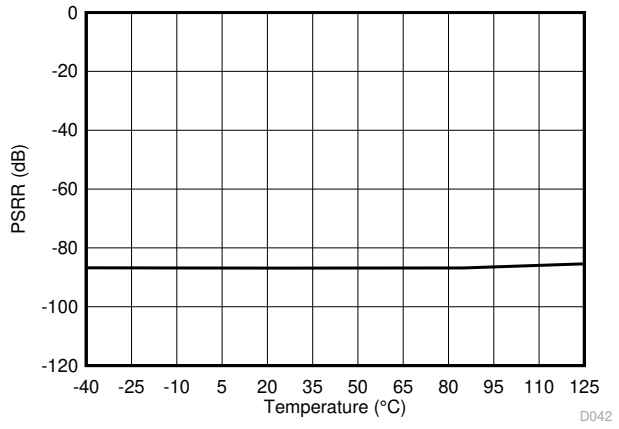

Figure 5-33. Power-Supply Rejection Ratio vs Temperature

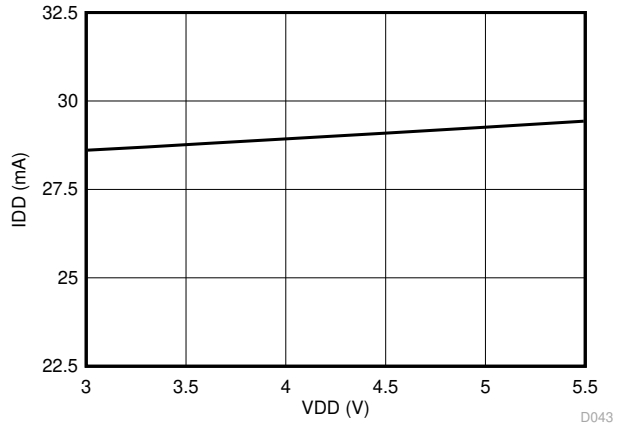

Figure 5-34. Input-Supply Current vs Supply Voltage

Copyright © 2024 Texas Instruments Incorporated

5.13 Typical Characteristics (continued)

at VDD = 3.3 V, INP = –1 V to 1 V, INN = HGND = 0V, and f_{IN} = 10 kHz (unless otherwise noted)

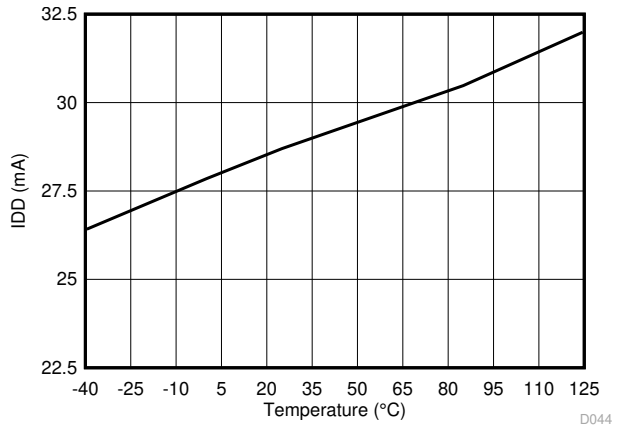

Figure 5-35. Input-Supply Current vs Temperature

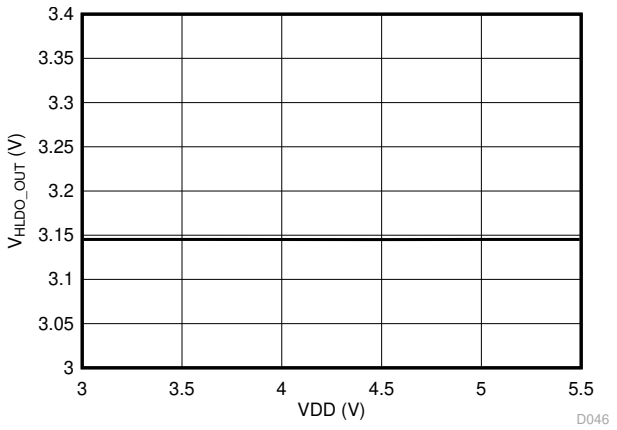

Figure 5-36. High-Side LDO Line Regulation

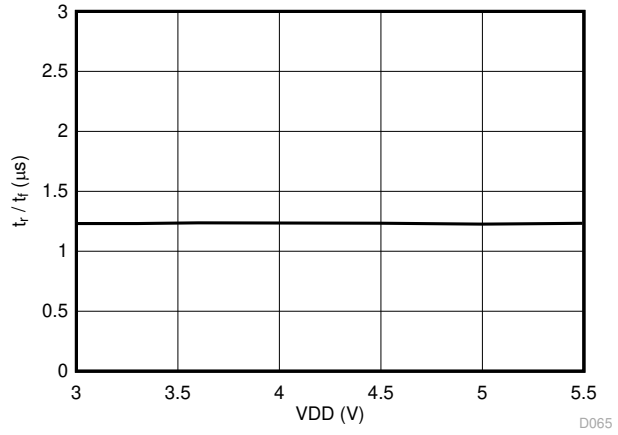

Figure 5-37. Output Rise And Fall Time vs Supply Voltage

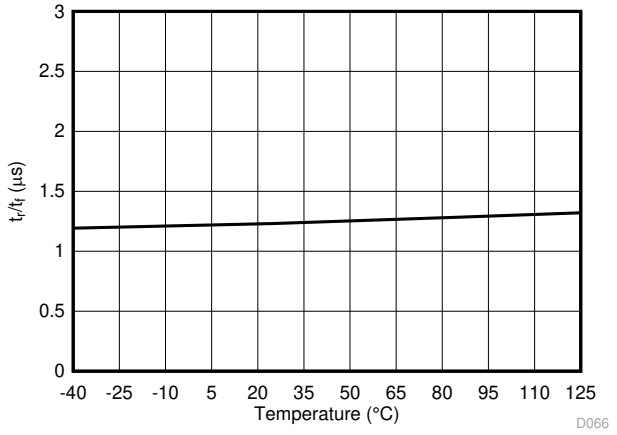

Figure 5-38. Output Rise And Fall Time vs Temperature

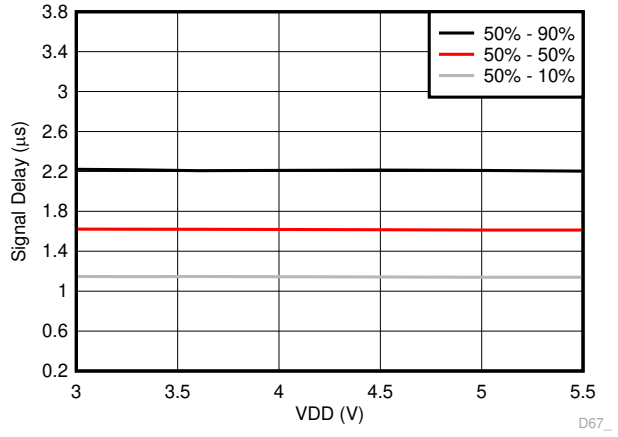

Figure 5-39. V_{IN} to V_{OUT} Signal Delay Time vs Supply Voltage

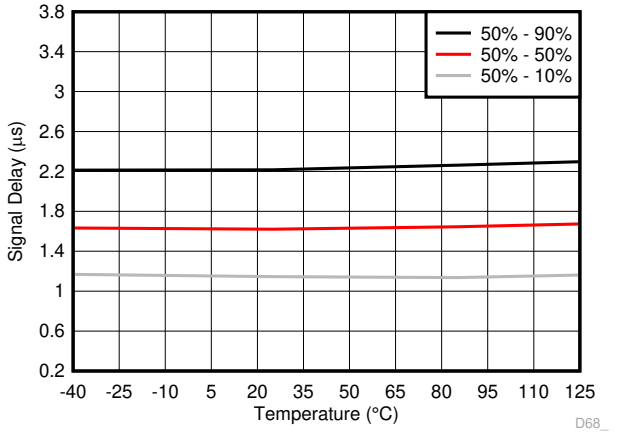

Figure 5-40. V_{IN} to V_{OUT} Signal Delay Time vs Temperature

6 Detailed Description

6.1 Overview

The AMC3330-Q1 is a fully-differential, precision, isolated amplifier with high input impedance, and an integrated DC/DC converter that allows the device to be supplied from a single 3.3-V or 5-V voltage supply source on the low side. The input stage of the device drives a second-order, delta-sigma (ΔΣ) modulator. The modulator uses an internal voltage reference and clock generator to convert the analog input signal to a digital bitstream. The drivers (termed TX in the *Functional Block Diagram*) transfer the output of the modulator across the isolation barrier that separates the high-side and low-side voltage domains. The received bitstream and clock are synchronized and processed by a fourth-order analog filter on the low-side and presented as a differential analog output.

The *Functional Block Diagram* shows a block diagram of the AMC3330-Q1. The 1.2-GΩ differential input impedance of the analog input stage supports low gain-error signal-sensing in high-voltage applications using high-impedance resistor dividers.
The signal path is isolated by a double capacitive silicon-dioxide (SiO_2) insulation barrier, whereas power isolation uses an on-chip transformer separated by a thin-film polymer as the insulating material.

6.2 Functional Block Diagram

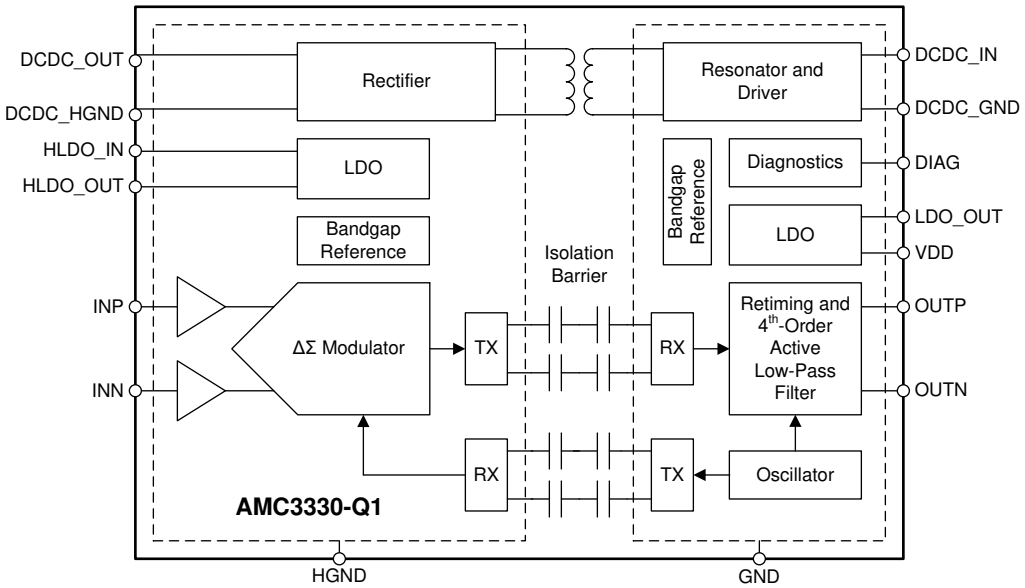

6.3 Feature Description

6.3.1 Analog Input

The input stage of the AMC3330-Q1 feeds a second-order, switched-capacitor, feed-forward ΔΣ modulator. The modulator converts the analog signal into a bitstream that is transferred over the isolation barrier, as described in the *Isolation Channel Signal Transmission* section. The high-impedance, and low bias-current input of the AMC3330-Q1 makes the device suitable for isolated, high-voltage-sensing applications that typically employ high-impedance resistor dividers.

There are two restrictions on the analog input signals (INP and INN). First, if the input voltage exceeds the input range specified in the *Absolute Maximum Ratings* table, the input current must be limited to 10 mA because the device input electrostatic discharge (ESD) diodes turn on. Second, the linearity and noise performance of the device are ensured only when the differential analog input voltage remains within the specified linear full-scale range V_{FSR} and within the specified input common-mode voltage range V_{CM} as specified in the *Recommended Operating Conditions* table.

Copyright © 2024 Texas Instruments Incorporated

6.3.2 Isolation Channel Signal Transmission

The AMC3330-Q1 uses an on-off keying (OOK) modulation scheme to transmit the modulator output-bitstream across the capacitive SiO_2-based isolation barrier. Figure 6-1 shows the block diagram of an isolation channel. The transmitter modulates the bitstream at TX IN with an internally generated, 480-MHz carrier and sends a burst across the isolation barrier to represent a digital *one* and sends a *no signal* to represent the digital *zero*. The receiver demodulates the signal after advanced signal conditioning and produces the output. The symmetrical design of each isolation channel improves the common-mode transient immunity (CMTI) performance and reduces the radiated emissions caused by the high-frequency carrier.

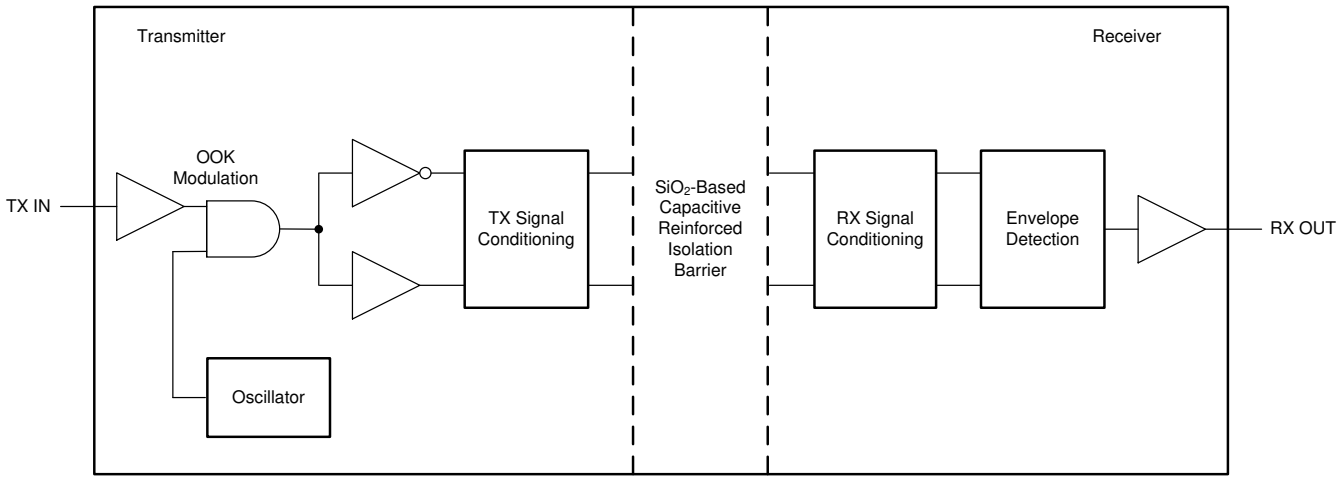

Figure 6-1. Block Diagram of an Isolation Channel

Figure 6-2 shows the concept of the on-off keying scheme.

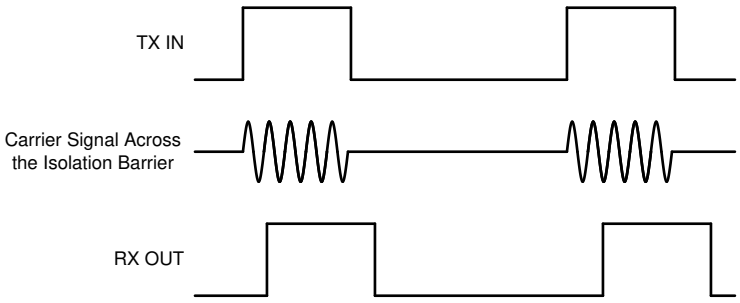

Figure 6-2. OOK-Based Modulation Scheme

6.3.3 Analog Output

The AMC3330-Q1 offers a differential analog output comprised of the OUTP and OUTN pins. For differential input voltages ($V_{INP} – V_{INN}$) in the range from –1 V to 1 V, the device provides a linear response with a nominal gain of 2. For example, for a differential input voltage of 1 V, the differential output voltage ($V_{OUTP} – V_{OUTN}$) is 2 V. At zero input (INP shorted to INN), both pins output the same voltage, V_{CMout}, as specified in the *Electrical Characteristics* table. For absolute differential input voltages greater than 1.0 V but less than 1.25 V, the differential output voltage continues to increase in magnitude but with reduced linearity performance. The outputs saturate as shown in Figure 6-3 if the differential input voltage exceeds the $V_{Clipping}$ value.

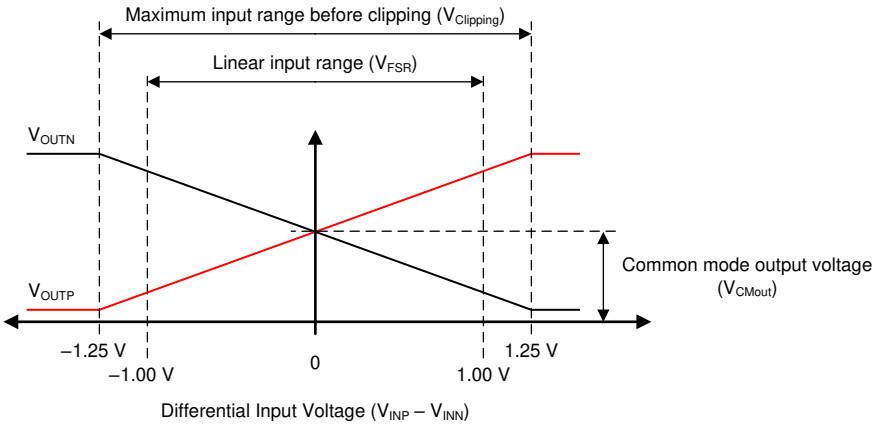

Figure 6-3. AMC3330-Q1 Output Behavior

The AMC3330-Q1 provides a fail-safe output that simplifies diagnostics on system level. The fail-safe output is active when the integrated DC/DC converter or hgh-side LDO don't deliver the required supply voltage for the high-side of the device. Figure 6-4 and Figure 6-5 illustrate the fail-safe output of the AMC3330-Q1 that is a negative differential output voltage value that does not occur under normal operating conditions. Use the maximum $V_{FAILSAFE}$ voltage specified in the *Electrical Characteristics* table as a reference value for the fail-safe detection on system level.

Copyright © 2024 Texas Instruments Incorporated

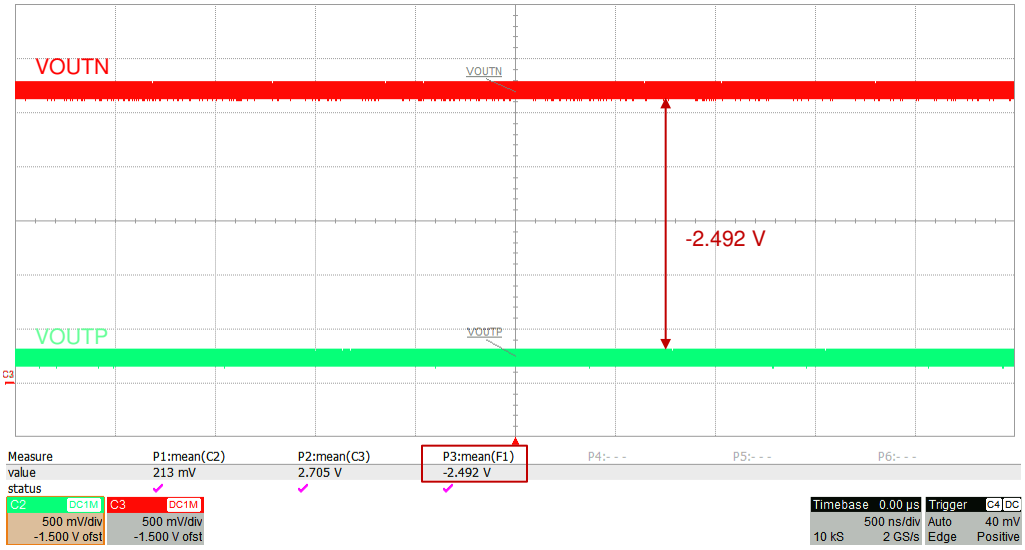

Figure 6-4. Typical Negative Clipping Output of the AMC3330-Q1

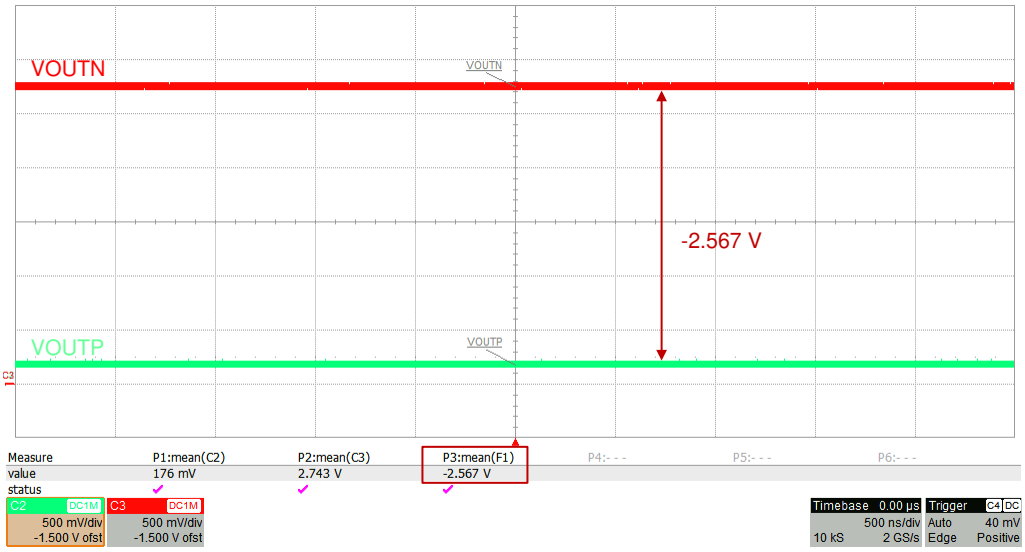

Figure 6-5. Typical Fail-Safe Output of the AMC3330-Q1

6.3.4 Isolated DC/DC Converter

The AMC3330-Q1 offers a fully integrated isolated DC/DC converter that includes the following components illustrated in the *Functional Block Diagram*:

- Low-dropout regulator (LDO) on the low-side to stabilize the supply voltage VDD that drives the low-side of the DC/DC converter
- Low-side full-bridge inverter and drivers
- Laminate-based, air-core transformer for high immunity to magnetic fields
- High-side full-bridge rectifier
- High-side LDO to stabilize the output voltage of the DC/DC converter for high analog performance of the signal path

The DC/DC converter uses a spread-spectrum clock generation technique to reduce the spectral density of the electromagnetic radiation. The resonator frequency is synchronous to the operation of the ΔΣ modulator to minimize interference with data transmission and support the high analog performance of the device.

The architecture of the DC/DC converter is optimized to drive the high-side circuitry of the AMC3330-Q1 and can source up to 1 mA of additional current (I_H) for an optional auxiliary circuit such as an active filter, pre-amplifier, or comparator.

6.3.5 Diagnostic Output and Fail-Safe Behavior

The open-drain DIAG pin can be monitored to confirm the device is operational, and the output voltage is valid. During power-up, the DIAG pin is actively held low until the high-side supply is in regulation and the device operates properly. The DIAG pin is actively pulled low if:

- The low-side does not receive data from the high-side (for example, because of a loss of power on the high-side). The amplifier outputs are driven to negative full-scale.
- The high-side DC/DC output voltage (DCDC_OUT) or the high-side LDO output voltage (HLDO_OUT) drop below their respective undervoltage detection thresholds V_{DCDCUV} and V_{HLDOUV} as sepecified in the *Electrical Characteristics* table. In this case, the low-side may still receive data from the high-side but the data may not be valid. The amplifier outputs are driven to negative full-scale.

During normal operation, the DIAG pin is in a high-impedance state. Connect the DIAG pin to a pull-up supply through a resistor or leave open if not used.

6.4 Device Functional Modes

The AMC3330-Q1 is operational when the power supply VDD is applied, as specified in the *Recommended Operating Conditions* table.

Copyright © 2024 Texas Instruments Incorporated

7 Application and Implementation

Note

Information in the following applications sections is not part of the TI component specification, and TI does not warrant its accuracy or completeness. TI's customers are responsible for determining suitability of components for their purposes, as well as validating and testing their design implementation to confirm system functionality.

7.1 Application Information

The low input bias current, AC and DC errors, and temperature drift make the AMC3330-Q1 a high-performance solution for applications where voltage measurement with high common-mode levels is required.

7.2 Typical Application

Isolated amplifiers are widely used for voltage measurements in high-voltage applications that must be isolated from a low-voltage domain. Typical applications are AC line voltage measurements at the input of a power factor correction (PFC) stage of an onboard charger (OBC). Other applications are DC measurements at the output of a PFC stage or DC/DC converter, or phase voltage measurements in traction inverters. The AMC3330-Q1 integrates an isolated power supply for the high-voltage side and therefore is particularly easy to use in applications that do not have a high-side supply readily available or where a high-side supply is referenced to a different ground potential than the signal to be measured.

Figure 7-1 illustrates a simplified schematic of the AMC3330-Q1 in an OBC where the AC phase voltage on the grid-side must to be measured. At that location in the system, there is no supply readily available for powering the isolated amplifier. The integrated isolated power supply, together with its bipolar input voltage range, makes the AMC3330-Q1 ideally suited for AC line-voltage sensing. In this example, the output current of the PFC is sensed by the AMC3301-Q1 across a shunt resistor on the positive DC-link rail where there is also no suitable supply available for powering the isolated amplifier. The integrated power-supply of the AMC3301-Q1 eliminates that problem and enables current sensing at optimal locations for the system.

Copyright © 2024 Texas Instruments Incorporated

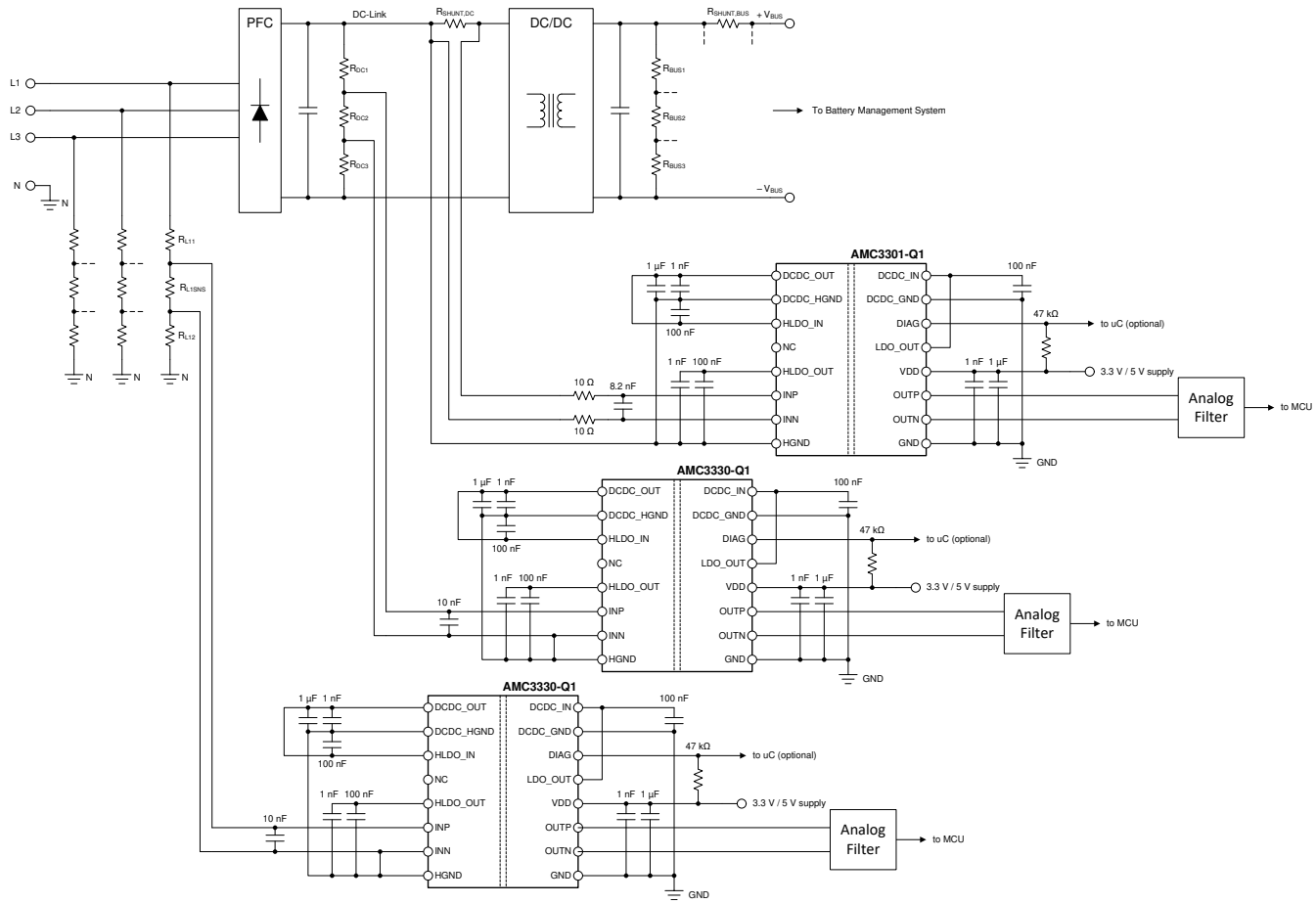

Figure 7-1. The AMC3330-Q1 in an OBC Application

7.2.1 Design Requirements

Table 7-1 lists the parameters for this typical application.

Table 7-1. Design Requirements

PARAMETER	VALUE
Low-side supply voltage	3.3 V or 5 V
Voltage drop across the sensing resistor for a linear response	1 V (maximum)
Current through the resistive divider, I_{CROSS}	100 µA (maximum)

7.2.2 Detailed Design Procedure

Use Ohm's Law to calculate the minimum total resistance of the resistive divider to limit the cross current to the desired value ($R_{TOTAL} = V_{Lx} / I_{CROSS}$) and the required sense resistor value to be connected to the AMC3330-Q1 input: $R_{SNS} = V_{FSR} / I_{CROSS}$.

Consider the following two restrictions to choose the proper value of the sense resistor R_{SNS}:

- The voltage drop on R_{SNS} caused by the nominal voltage range of the system must not exceed the recommended input voltage range: $V_{SNS} \leq V_{FSR}$
- The voltage drop on R_{SNS} caused by the maximum allowed system overvoltage must not exceed the input voltage that causes a clipping output: $V_{SNS} \leq V_{Clipping}$

Copyright © 2024 Texas Instruments Incorporated

Table 7-2 lists examples of nominal E96-series (1% accuracy) resistor values for systems using 120-V and 230-V AC line voltages.

Table 7-2. Resistor Value Examples

PARAMETER	120-V_{RMS} LINE VOLTAGE	230-V_{RMS} LINE VOLTAGE
Peak voltage	170 V	325 V
Resistive divider resistors R_{L11}, R_{L12}	845 kΩ	1.62 MΩ
Sense resistor R_{SNS}	10 kΩ	10 kΩ
Current through resistive divider I_{CROSS}	100 µA	100 µA
Resulting voltage drop on sense resistor V_{SNS}	1.00 V	1.00 V

7.2.2.1 Input Filter Design

TI recommends placing an RC filter in front of the isolated amplifier to improve signal-to-noise performance of the signal path. Design the input filter such that:

- The cutoff frequency of the filter is at least one order of magnitude lower than the sampling frequency (20 MHz) of the internal ΔΣ modulator
- The input bias current does not generate significant voltage drop across the DC impedance of the input filter
- The impedances measured from the analog inputs are equal

Most voltage sensing applications use high-impedance resistor dividers in front of the isolated amplifier to scale down the input voltage. In this case, a single capacitor as given in Figure 7-2 is sufficient to filter the input signal.

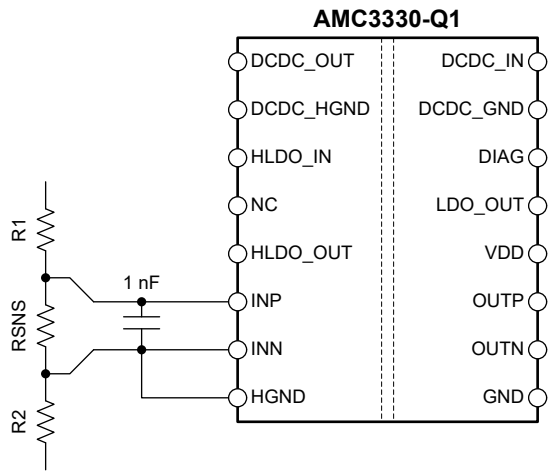

Figure 7-2. Differential Input Filter

7.2.2.2 Differential to Single-Ended Output Conversion

For systems using single-ended input ADCs to convert the analog output voltage into digital, Figure 7-3 shows an example of a TLV313-Q1 -based signal conversion and filter circuit. With R1 = R2 = R3 = R4, the output voltage equals (V_{OUTP} – V_{OUTN}) + V_{REF}. Tailor the bandwidth of this filter stage to the bandwidth requirement of the system and use NP0-type capacitors for best performance. For most applications, R1 = R2 = R3 = R4 = 10 kΩ and C1 = C2 = 1000 pF yields good performance.

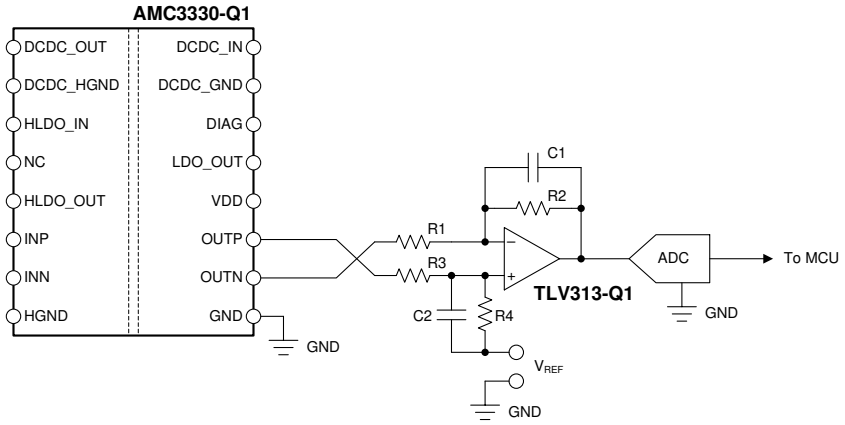

Figure 7-3. Connecting the AMC3330-Q1 Output to a Single-Ended Input ADC

For more information on the general procedure to design the filtering and driving stages of SAR ADCs, see the *18-Bit, 1MSPS Data Acquisition Block (DAQ) Optimized for Lowest Distortion and Noise* and *18-Bit Data Acquisition Block (DAQ) Optimized for Lowest Power* reference guides, available for download at www.ti.com.

7.2.3 Application Curve

Figure 7-4 shows the typical full-scale step response of the AMC3330-Q1.

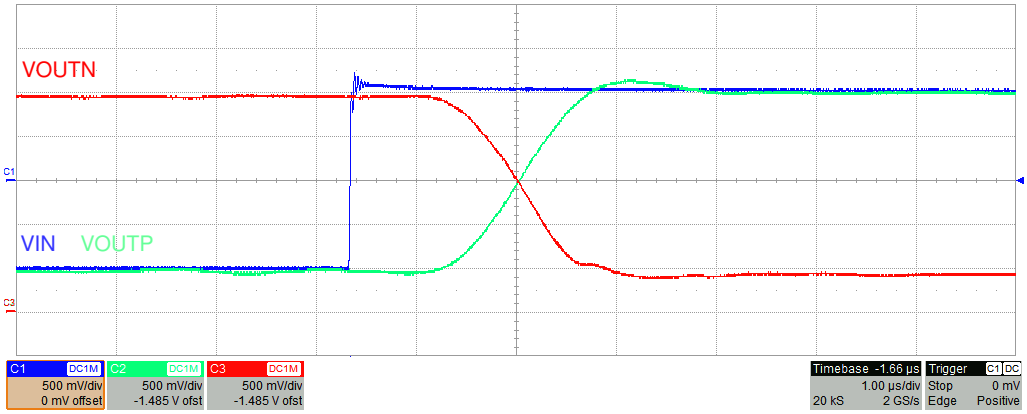

Figure 7-4. Step Respose of the AMC3330-Q1

Copyright © 2024 Texas Instruments Incorporated

7.3 Best Design Practices

Do not leave the analog inputs INP and INN of the AMC3330-Q1 unconnected (floating) when the device is powered up on the high-side. If the device input is left floating, the bias current may generate a negative input voltage that exceeds the specified input voltage range and the output of the device is invalid.

Connect the high-side ground (HGND) to INN, either directly or through a resistive path. A DC current path between INN and HGND is required to define the input common-mode voltage. Take care not to exceed the input common-mode range as specified in the *Recommended Operating Conditions* table.

The high-side LDO sources a limited amount of current (I_H) to power external circuitry. Do not overload the high-side LDO.

The low-side LDO does not output a constant voltage and is not intended for powering any external circuitry. Do not connect any external load to the LDO_OUT pin.

7.4 Power Supply Recommendations

The AMC3330-Q1 is powered from the low-side power supply (VDD) with a nominal value of 3.3 V (or 5 V). TI recommends a low-ESR decoupling capacitor of 1 nF (C8 in Figure 7-5) placed as close as possible to the VDD pin, followed by a 1-µF capacitor (C9) to filter this power-supply path.

The low-side of the DC/DC converter is decoupled with a low-ESR 100-nF capacitor (C4) positioned close to the device between the DCDC_IN and DCDC_GND pins. Use a 1-µF capacitor (C2) to decouple the high-side in addition to a low-ESR, 1-nF capacitor (C3) placed as close as possible to the device and connected to the DCDC_OUT and DCDC_HGND pins.

For the high-side LDO, use low-ESR capacitors of 1-nF (C6), placed as close as possible to the AMC3330-Q1, followed by a 100-nF decoupling capacitor (C5).

The ground reference for the high-side (HGND) is derived from the terminal of the sense resistor which is connected to the negative input (INN) of the device. For best DC accuracy, use a separate trace to make this connection but shorting HGND to INN directly at the device input is also acceptable. The high-side DC/DC ground terminal(DCDC_HGND) is shorted to HGND directly at the device pins.

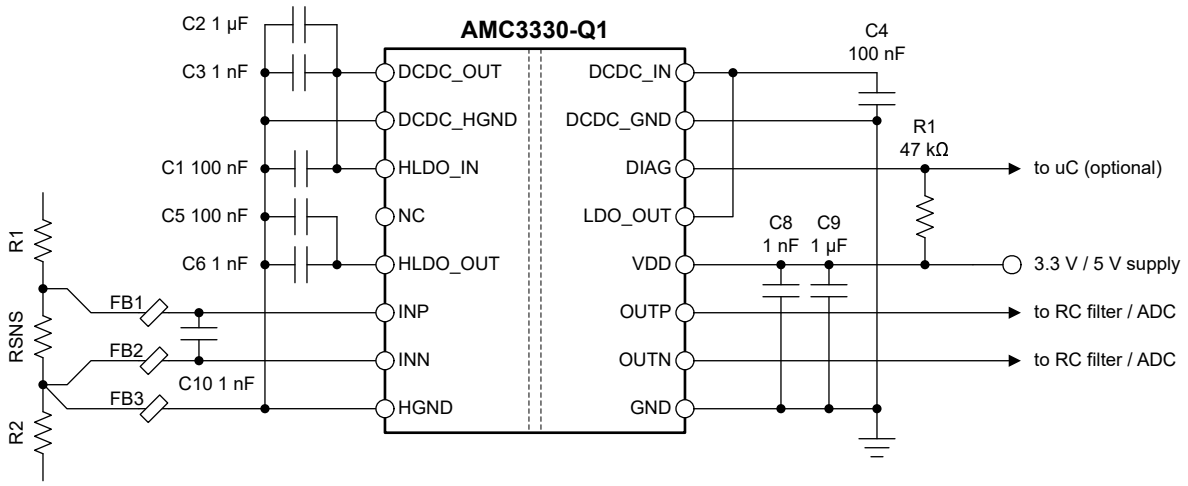

Figure 7-5. Decoupling the AMC3330-Q1

Capacitors must provide adequate *effective* capacitance under the applicable DC bias conditions they experience in the application. Multilayer ceramic capacitors (MLCC) capacitors typically exhibit only a fraction of their nominal capacitance under real-world conditions and this factor must be taken into consideration when selecting these capacitors. This problem is especially acute in low-profile capacitors, in which the dielectric field strength is higher than in taller components. Reputable capacitor manufacturers provide capacitance versus DC bias curves that greatly simplify component selection.

Copyright © 2024 Texas Instruments Incorporated

The *Best Practices to Attenuate AMC3301 Family Radiated Emissions EMI* application note is available for download at www.ti.com.

Table 7-3 lists components suitable for use with the AMC3330-Q1. This list is not exhaustive. Other components may exist that are equally suitable (or better), however these listed components have been validated during the development of the AMC3330-Q1.

Table 7-3. Recommended External Components

DESCRIPTION		PART NUMBER	MANUFACTURER	SIZE (EIA, L x W)
VDD				
C8	1 nF ± 10%, X7R, 50 V	12065C102KAT2A	AVX	1206, 3.2 mm x 1.6 mm
C9	1 µF ± 10%, X7R, 25 V	12063C105KAT2A	AVX	1206, 3.2 mm x 1.6 mm
DC/DC CONVERTER				
C4	100 nF ± 10%, X7R, 50 V	C0603C104K5RACAUTO	Kemet	0603, 1.6 mm x 0.8 mm
C3	1 nF ± 10%, X7R, 50 V	C0603C102K5RACTU	Kemet	0603, 1.6 mm x 0.8 mm
C2	1 µF ± 10%, X7R, 25 V	CGA3E1X7R1E105K080AC	TDK	0603, 1.6 mm x 0.8 mm
HLDO				
C1	100 nF ± 10%, X7R, 50 V	C0603C104K5RACAUTO	Kemet	0603, 1.6 mm x 0.8 mm
C5	100 nF ± 5%, NP0, 50 V	C3216NP01H104J160AA	TDK	1206, 3.2 mm x 1.6 mm
C6	1 nF ± 10%, X7R, 50 V	12065C102KAT2A	AVX	1206, 3.2 mm x 1.6 mm
FERRITE BEADS				
FB1, FB2, FB3	Ferrite bead(1)	74269244182	Wurth Elektronik	0402, 1.0mm × 0.5mm
		BLM15HD182SH1	Murata	0402, 1.0mm × 0.5mm
		BKH1005LM182-T	Taiyo Yuden	0402, 1.0mm × 0.5mm

(1) No ferrite beads are used for parametric validation.

Copyright © 2024 Texas Instruments Incorporated

7.5 Layout

7.5.1 Layout Guidelines

Figure 7-6 shows a layout recommendation with the critical placement of the decoupling capacitors. The same component reference designators are used as in the *Power Supply Recommendations* section. Decoupling capacitors are placed as close as possible to the AMC3330-Q1 supply pins. For best performance, place the sense resistor close to the INP and INN inputs of the AMC3330-Q1 and keep the layout of both connections symmetrical.

This layout is used on the AMC3330-Q1 EVM and supports CISPR-25 compliant electromagnetic radiation levels.

7.5.2 Layout Example

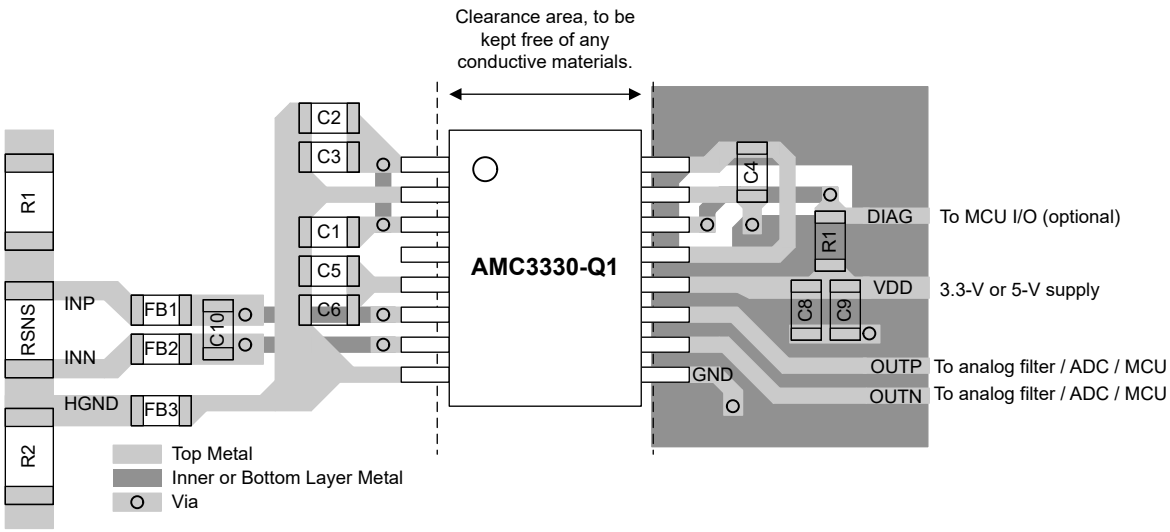

Figure 7-6. Recommended Layout of the AMC3330-Q1

8 Device and Documentation Support

8.1 Device Support

8.1.1 Device Nomenclature

Texas Instruments, *Isolation Glossary*

8.2 Documentation Support

8.2.1 Related Documentation

For related documentation see the following:

- Texas Instruments, *ISO72x Digital Isolator Magnetic-Field Immunity* application note
- Texas Instruments, *AMC3301-Q1 Precision, ±250-mV Input, Reinforced Isolated Amplifier With Integrated DC/DC Converter* data sheet
- Texas Instruments, *TLVx313-Q1 Low-Power, Rail-to-Rail In/Out, 750-µV Typical Offset, 1-MHz Operational Amplifier for Cost-Sensitive Systems* data sheet
- Texas Instruments, *18-Bit, 1MSPS Data Acquisition Block (DAQ) Optimized for Lowest Distortion and Noise* reference guide
- Texas Instruments, *18-Bit Data Acquisition Block (DAQ) Optimized for Lowest Power* reference guide

8.3 Receiving Notification of Documentation Updates

To receive notification of documentation updates, navigate to the device product folder on ti.com. Click on *Notifications* to register and receive a weekly digest of any product information that has changed. For change details, review the revision history included in any revised document.

8.4 Support Resources

TI E2E™ support forums are an engineer's go-to source for fast, verified answers and design help — straight from the experts. Search existing answers or ask your own question to get the quick design help you need.

Linked content is provided "AS IS" by the respective contributors. They do not constitute TI specifications and do not necessarily reflect TI's views; see TI's Terms of Use.

8.5 Trademarks

TI E2E™ is a trademark of Texas Instruments.
All trademarks are the property of their respective owners.

8.6 Electrostatic Discharge Caution

This integrated circuit can be damaged by ESD. Texas Instruments recommends that all integrated circuits be handled with appropriate precautions. Failure to observe proper handling and installation procedures can cause damage.

ESD damage can range from subtle performance degradation to complete device failure. Precision integrated circuits may be more susceptible to damage because very small parametric changes could cause the device not to meet its published specifications.

8.7 Glossary

TI Glossary	This glossary lists and explains terms, acronyms, and definitions.

Copyright © 2024 Texas Instruments Incorporated

9 Revision History

NOTE: Page numbers for previous revisions may differ from page numbers in the current version.

Changes from Revision A (October 2020) to Revision B (September 2024)	Page
• Changed reinforced isolation safety-related certification from *VDE V 0884-11* to *DIN EN IEC 60747-17 (VDE 0884-17)* throughout document	1
• Added last *Applications* bullet	1
• Changed *Application Example* figure	1
• Changed Absolute Maximum Ratings: changed max for DIAG pin from 5.5 V to 6.5 V	4
• Added analog output capacitive and resistive drive capability specification	4
• Updated Barrier capacitance specification from 3.5 pF to 4.5 pF	6
• Changed isolation standard from DIN VDE V 0884-11 (VDE V 0884-11) to DIN EN IEC 60747-17 (VDE 0884-17) and updated the Insulation Specifications and Safety-Related Certifications tables accordingly	7
• THD footnote added	8
• Added DIGITAL OUTPUT (DIAG) electrical specifications	8
• Added VDD_{UV} and VDD_{POR} specifications	8
• Added I_H specification for 4.5 V ≤ VDD ≤ 5.5 V	8
• Deleted duplicate column in *Resistor Value Examples* table	24
• Changed *Differential Input Filter* figure	25
• Added high-side and low-side LDO external load discussion to *Best Design Practices* section	27
• Changed *Power Supply Recommendations* section: Changed *Decoupling the AMC3330-Q1* figure, added *Best Practices to Attenuate AMC3301 Family Radiated Emissions EMI* reference and added ferrite bead section to *Recommended External Components* table	27
• Changed OUTP, OUTN, and VDD routing in *Recommended Layout of the AMC3330-Q1* figure	29

Changes from Revision * (June 2020) to Revision A (October 2020)	Page
• Changed document status from advance information to production data	1

10 Mechanical, Packaging, and Orderable Information

The following pages include mechanical, packaging, and orderable information. This information is the most current data available for the designated devices. This data is subject to change without notice and revision of this document. For browser-based versions of this data sheet, refer to the left-hand navigation.

PACKAGING INFORMATION

Orderable part number	Status (1)	Material type (2)	Package | Pins	Package qty | Carrier	RoHS (3)	Lead finish/ Ball material (4)	MSL rating/ Peak reflow (5)	Op temp (°C)	Part marking (6)
AMC3330QDWERQ1	Active	Production	SOIC (DWE) | 16	2000 | LARGE T&R	Yes	NIPDAU	Level-3-260C-168 HR	-40 to 125	AMC3330Q
AMC3330QDWERQ1.A	Active	Production	SOIC (DWE) | 16	2000 | LARGE T&R	Yes	NIPDAU	Level-3-260C-168 HR	-40 to 125	AMC3330Q

(1) **Status:** For more details on status, see our product life cycle.

(2) **Material type:** When designated, preproduction parts are prototypes/experimental devices, and are not yet approved or released for full production. Testing and final process, including without limitation quality assurance, reliability performance testing, and/or process qualification, may not yet be complete, and this item is subject to further changes or possible discontinuation. If available for ordering, purchases will be subject to an additional waiver at checkout, and are intended for early internal evaluation purposes only. These items are sold without warranties of any kind.

(3) **RoHS values:** Yes, No, RoHS Exempt. See the TI RoHS Statement for additional information and value definition.

(4) **Lead finish/Ball material:** Parts may have multiple material finish options. Finish options are separated by a vertical ruled line. Lead finish/Ball material values may wrap to two lines if the finish value exceeds the maximum column width.

(5) **MSL rating/Peak reflow:** The moisture sensitivity level ratings and peak solder (reflow) temperatures. In the event that a part has multiple moisture sensitivity ratings, only the lowest level per JEDEC standards is shown. Refer to the shipping label for the actual reflow temperature that will be used to mount the part to the printed circuit board.

(6) **Part marking:** There may be an additional marking, which relates to the logo, the lot trace code information, or the environmental category of the part.

Multiple part markings will be inside parentheses. Only one part marking contained in parentheses and separated by a "~" will appear on a part. If a line is indented then it is a continuation of the previous line and the two combined represent the entire part marking for that device.

Important Information and Disclaimer: The information provided on this page represents TI's knowledge and belief as of the date that it is provided. TI bases its knowledge and belief on information provided by third parties, and makes no representation or warranty as to the accuracy of such information. Efforts are underway to better integrate information from third parties. TI has taken and continues to take reasonable steps to provide representative and accurate information but may not have conducted destructive testing or chemical analysis on incoming materials and chemicals. TI and TI suppliers consider certain information to be proprietary, and thus CAS numbers and other limited information may not be available for release.

In no event shall TI's liability arising out of such information exceed the total purchase price of the TI part(s) at issue in this document sold by TI to Customer on an annual basis.

OTHER QUALIFIED VERSIONS OF AMC3330-Q1 :

- Catalog : AMC3330

NOTE: Qualified Version Definitions:

- Catalog - TI's standard catalog product

TAPE AND REEL INFORMATION

REEL DIMENSIONS

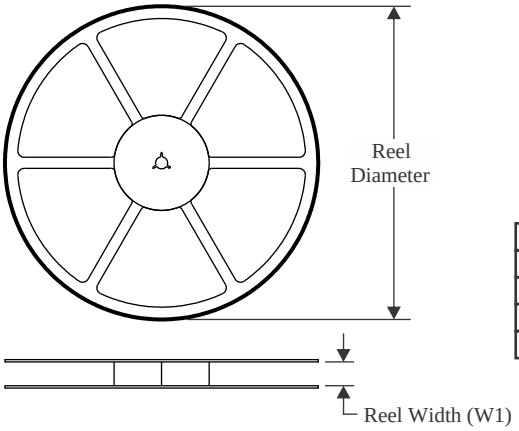

TAPE DIMENSIONS

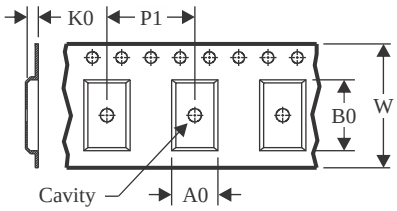

A0	Dimension designed to accommodate the component width
B0	Dimension designed to accommodate the component length
K0	Dimension designed to accommodate the component thickness
W	Overall width of the carrier tape
P1	Pitch between successive cavity centers

QUADRANT ASSIGNMENTS FOR PIN 1 ORIENTATION IN TAPE

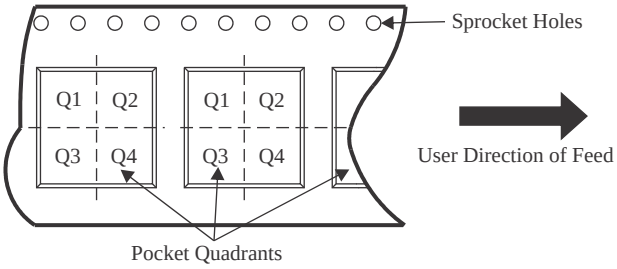

*All dimensions are nominal

Device	Package Type	Package Drawing	Pins	SPQ	Reel Diameter (mm)	Reel Width W1 (mm)	A0 (mm)	B0 (mm)	K0 (mm)	P1 (mm)	W (mm)	Pin1 Quadrant
AMC3330QDWERQ1	SOIC	DWE	16	2000	330.0	16.4	10.75	10.7	2.7	12.0	16.0	Q1

TAPE AND REEL BOX DIMENSIONS

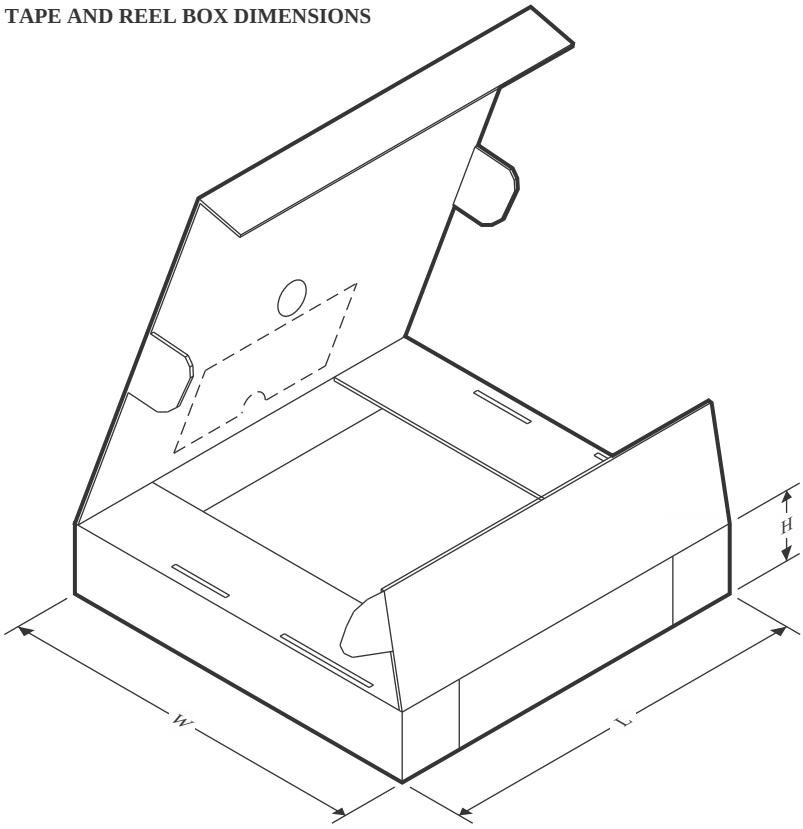

*All dimensions are nominal

Device	Package Type	Package Drawing	Pins	SPQ	Length (mm)	Width (mm)	Height (mm)
AMC3330QDWERQ1	SOIC	DWE	16	2000	350.0	350.0	43.0

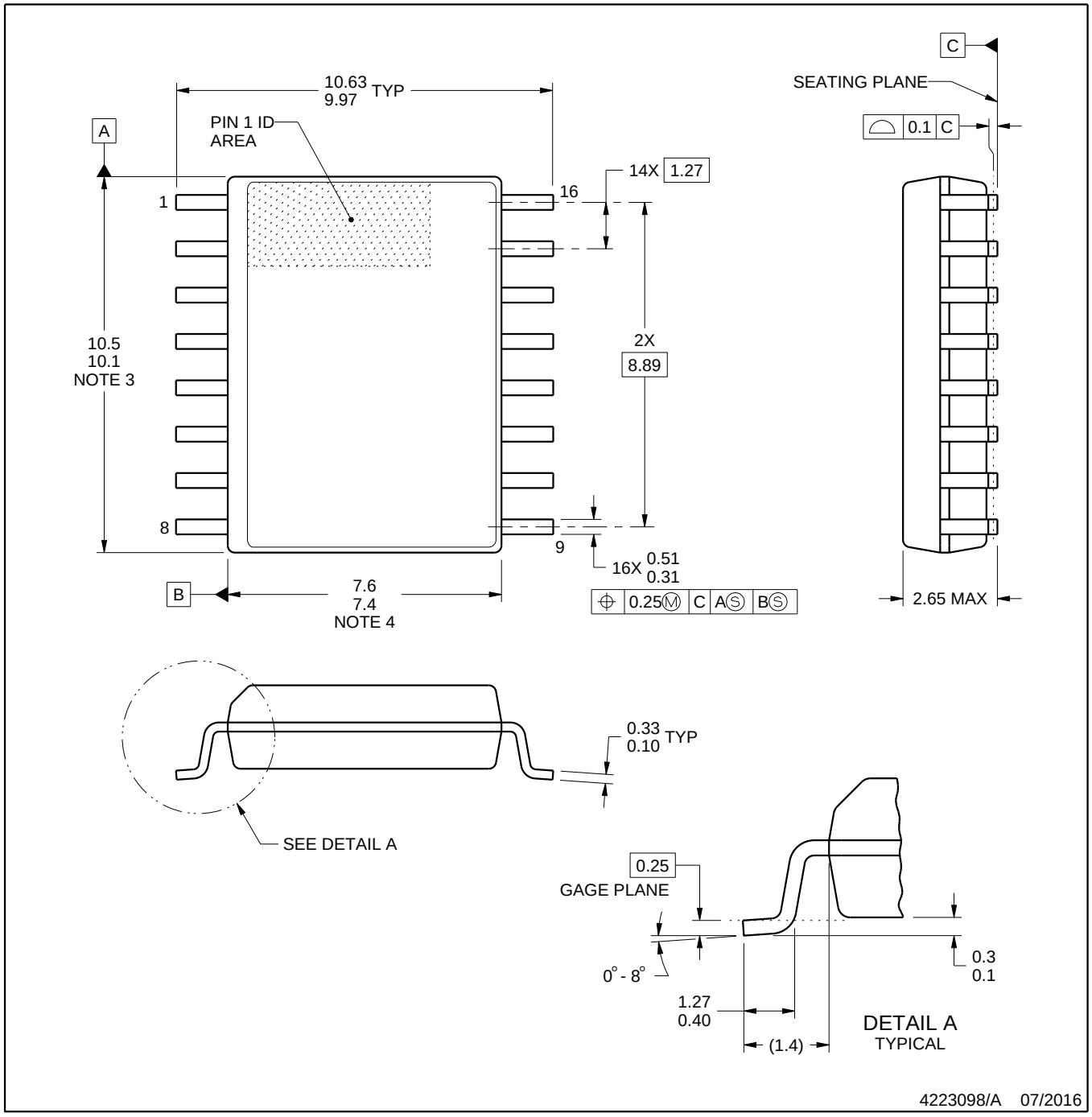

NOTES:

1. All linear dimensions are in millimeters. Any dimensions in parenthesis are for reference only. Dimensioning and tolerancing per ASME Y14.5M.
2. This drawing is subject to change without notice.
3. This dimension does not include mold flash, protrusions, or gate burrs. Mold flash, protrusions, or gate burrs shall not exceed 0.15 mm, per side.
4. This dimension does not include interlead flash. Interlead flash shall not exceed 0.25 mm, per side.
5. Reference JEDEC registration MS-013.

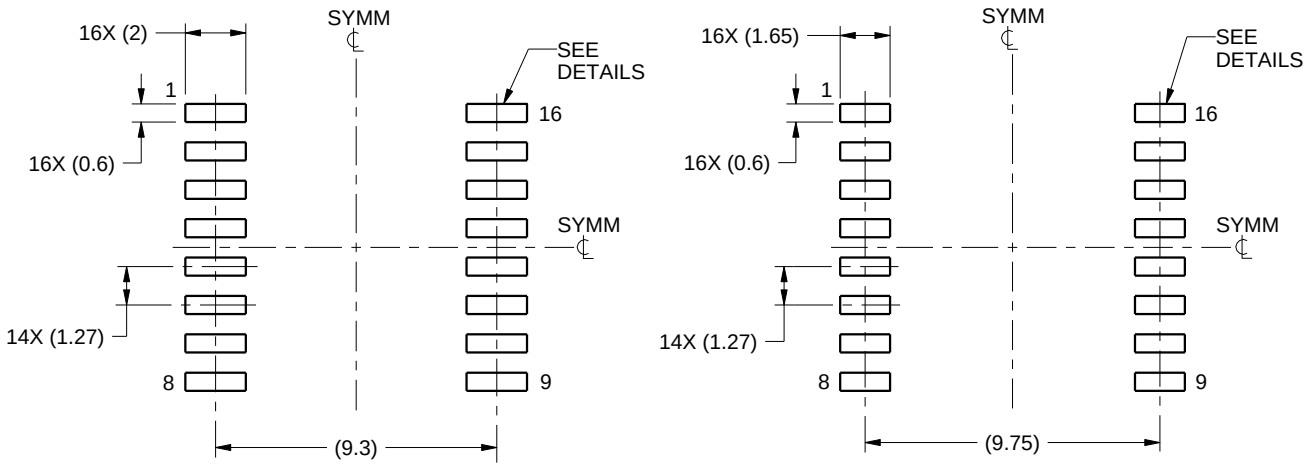

IPC-7351 NOMINAL
7.3 mm CLEARANCE/CREEPAGE

HV / ISOLATION OPTION
8.1 mm CLEARANCE/CREEPAGE

LAND PATTERN EXAMPLE
SCALE:4X

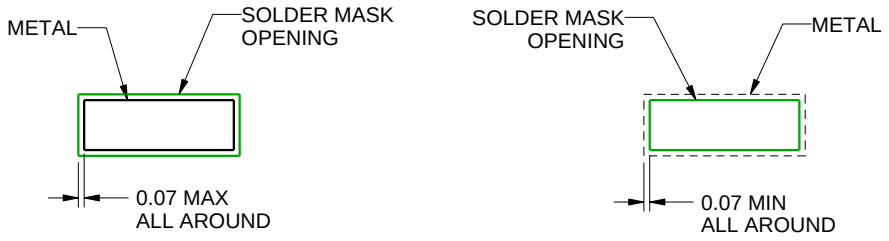

NON SOLDER MASK DEFINED

SOLDER MASK DEFINED

SOLDER MASK DETAILS

4223098/A 07/2016

NOTES: (continued)

6. Publication IPC-7351 may have alternate designs.
7. Solder mask tolerances between and around signal pads can vary based on board fabrication site.

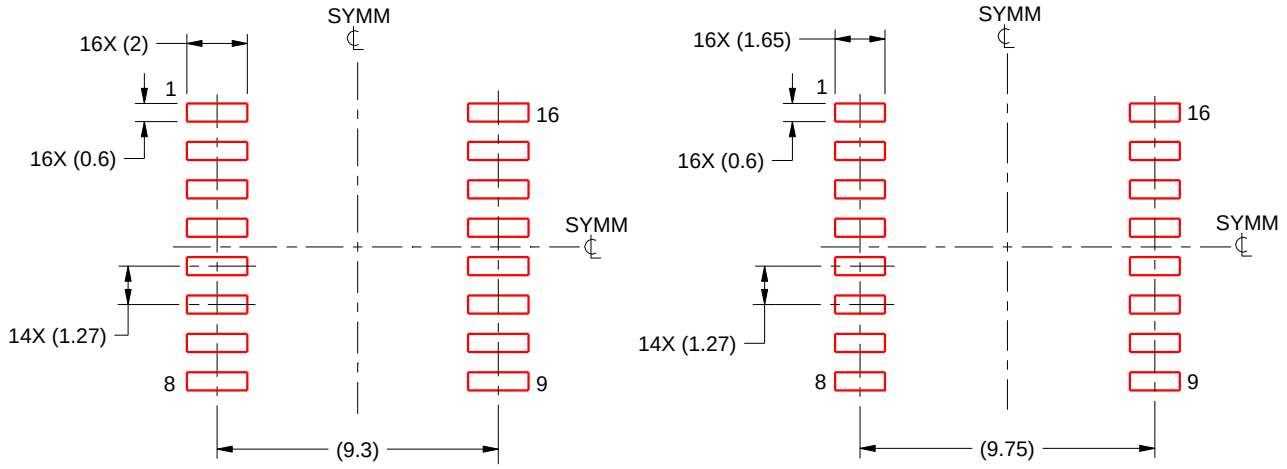

IPC-7351 NOMINAL
7.3 mm CLEARANCE/CREEPAGE

HV / ISOLATION OPTION
8.1 mm CLEARANCE/CREEPAGE

SOLDER PASTE EXAMPLE
BASED ON 0.125 mm THICK STENCIL
SCALE:4X

4223098/A 07/2016

NOTES: (continued)

8. Laser cutting apertures with trapezoidal walls and rounded corners may offer better paste release. IPC-7525 may have alternate design recommendations.
9. Board assembly site may have different recommendations for stencil design.

IMPORTANT NOTICE AND DISCLAIMER

TI PROVIDES TECHNICAL AND RELIABILITY DATA (INCLUDING DATASHEETS), DESIGN RESOURCES (INCLUDING REFERENCE DESIGNS), APPLICATION OR OTHER DESIGN ADVICE, WEB TOOLS, SAFETY INFORMATION, AND OTHER RESOURCES “AS IS” AND WITH ALL FAULTS, AND DISCLAIMS ALL WARRANTIES, EXPRESS AND IMPLIED, INCLUDING WITHOUT LIMITATION ANY IMPLIED WARRANTIES OF MERCHANTABILITY, FITNESS FOR A PARTICULAR PURPOSE OR NON-INFRINGEMENT OF THIRD PARTY INTELLECTUAL PROPERTY RIGHTS.

These resources are intended for skilled developers designing with TI products. You are solely responsible for (1) selecting the appropriate TI products for your application, (2) designing, validating and testing your application, and (3) ensuring your application meets applicable standards, and any other safety, security, regulatory or other requirements.

These resources are subject to change without notice. TI grants you permission to use these resources only for development of an application that uses the TI products described in the resource. Other reproduction and display of these resources is prohibited. No license is granted to any other TI intellectual property right or to any third party intellectual property right. TI disclaims responsibility for, and you fully indemnify TI and its representatives against any claims, damages, costs, losses, and liabilities arising out of your use of these resources.

TI’s products are provided subject to TI’s Terms of Sale, TI’s General Quality Guidelines, or other applicable terms available either on ti.com or provided in conjunction with such TI products. TI’s provision of these resources does not expand or otherwise alter TI’s applicable warranties or warranty disclaimers for TI products. Unless TI explicitly designates a product as custom or customer-specified, TI products are standard, catalog, general purpose devices.

TI objects to and rejects any additional or different terms you may propose.

Copyright © 2026, Texas Instruments Incorporated

Last updated 10/2025