TI TECH DAYS

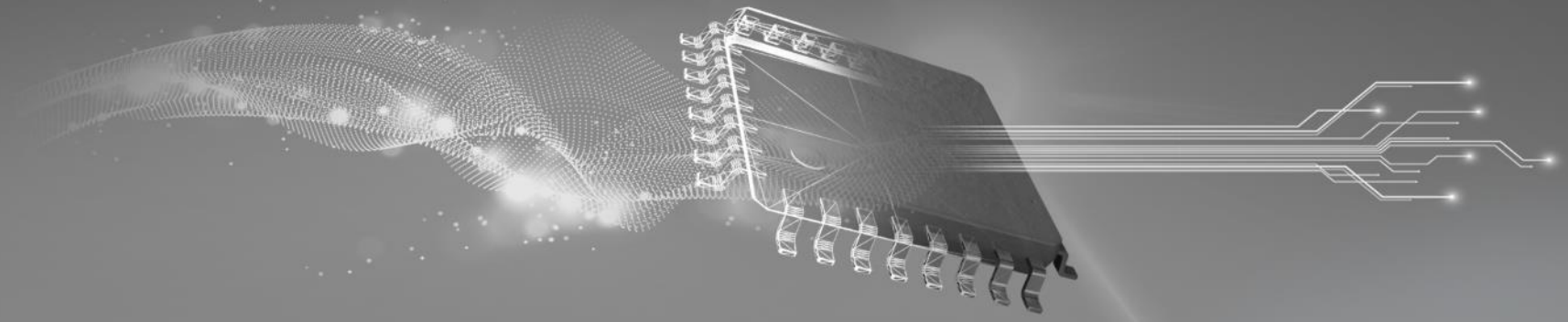

USB Type-C® and USB Type-C® PD

Adam McGaffin

APP-PSIL-PI

Texas Instruments

Agenda

Introduction to USB Type-C® and Power Delivery

USB Type-C® PD battery charging reference designs

Portfolio walkthrough and value propositions

Agenda

Introduction to USB Type-C® and Power Delivery

USB Type-C® PD battery charging reference designs

Portfolio walkthrough and value propositions

The USB connectors

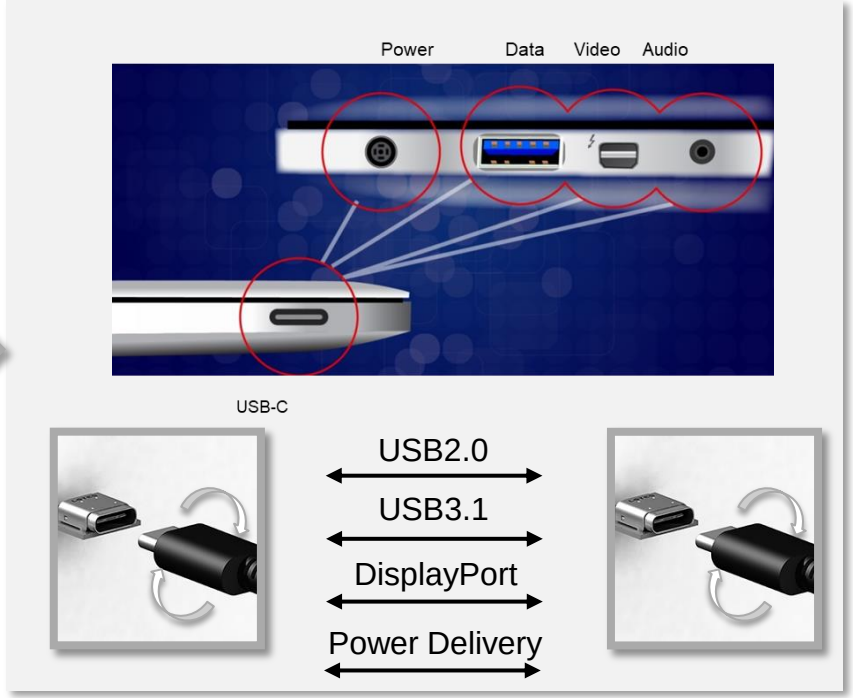

USB Type-C®/PD technology overview

What is Type-C® /PD

USB-C/PD (Power Delivery) is a wide-spread interface that is scalable for power & signaling. It is a specification for a reversible-plug connector for USB devices and cabling.

When to use Type-C® /PD


Wall Outlet


Adapter



Charger


Power Bank



USB Devices Accessories


Mobile/Desktop HDD


USB Powered Accessories


Desktop PC/Server


USB Hub


Infotainment


Laptop


Monitor, TV


Docking Station


Mobile Devices

Why Now?

- A single USB Type-C® connector can deliver functions that several connectors provide today in our electronic gadgets.
- Standard USB Type-C® now offer more than twice of existing BC1.2 power and USB Type-C® PD now offer up to 100 W of power.
- Supports increased demand of video and high data rates through alternate modes.

USB Type-C® is a physical interface

Supports USB 2.0 or USB 3.1 or DisplayPort video or other protocols

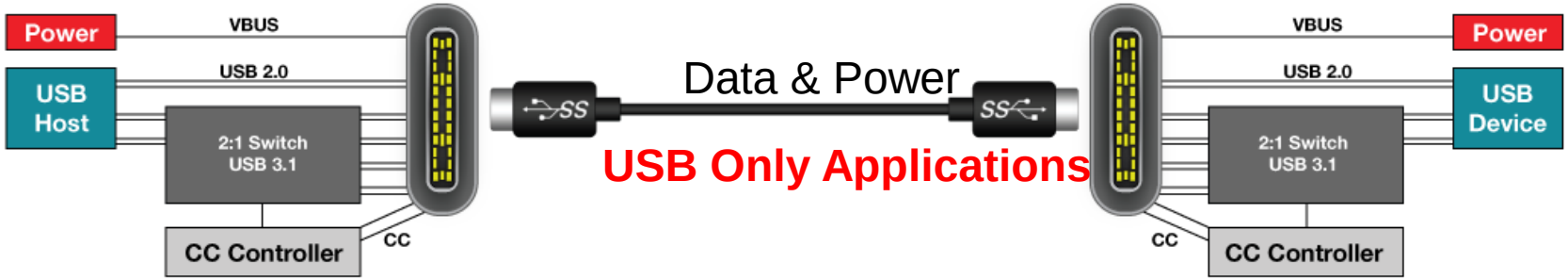

USB Type-C® is a connector/cable interface, not a new speed
USB2, USB3.1 and Alt Mode function (DP video) can co-exist

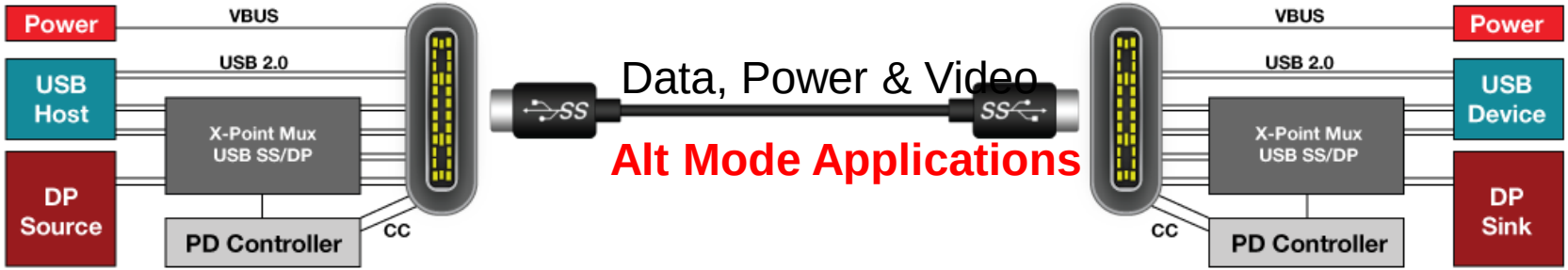

USB power supply options

Mode of Operation	Nominal Voltage	Maximum Current	Notes
USB 2.0	5 V	500 mA	2.5 W
USB 3.1	5 V	900 mA	4.5 W
USB BC 1.2	5 V	Up to 1.5 A	Up to 7.5 W
USB Type-C	5 V	1.5 A	7.5 W
USB Type-C	5 V	3 A	15 W
USB PD	Configurable up to 20 V	Configurable up to 5 A	Up to 100 W, directional control and power level, management

USB speed options

USB Type	Speed (Gb/s)
USB 2.0	0.480
USB 3.1 Gen 1	5
USB 3.1 Gen 2	10
USB 3.2 Gen 2x2	20
Type-C® PD2 with AM (TBT2)	20
Type-C® PD3 with AM (TBT3/USB4)	40

USB Type-C® flippable receptacle int

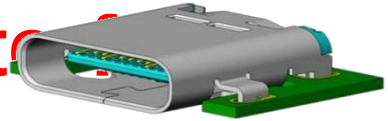

Note: Determining the plug's polarity is only necessary if USB SS or DP Alt Mode is used

High Speed Data, USB SS, SS+ TX or DP Alt Mode

USB2 Data

Sideband Use, AUX for DP, Not Used for USB

High Speed Data USB SS, SS+ RX or DP Alt Mode

GND	TX1+	TX1-	VBUS	CC1	D+	D-	**SBU**	VBUS	RX2+	RX2-	GND
GND	RX1+	RX1-	VBUS	**SBU**	D-	D+	CC2	VBUS	TX2-	TX2+	GND

Cable Ground

Cable Bus Power

- Configuration channel, for cable attach, orientation, role detection, and current mode
- One becomes VCONN to supply power for cable or adaptor

USB Type-C® Power Delivery (PD) features

Why use USB PD?

- Enables higher voltage, up to 20 V
  - 5 V, 9 V, 15 V and 20 V satisfy most customer needs
- Up to 100 W power over USB cable
- Which port provides power is negotiable:
  - DFP can be provider or consumer
  - UFP can be provider or consumer
- Efficient power management across multiple peripherals
- Determine capabilities of the connected device
- Co-existence with legacy USB products
- Enables alternate modes

Not related to power, but USB PD required

Typical PD Flow

VBUS initially defaults to 5V, current based on Rp — 5 V

↓

USB power delivery negotiation over CC wire — 5 V

↓

Power supplied over VBUS at the rate negotiated — 20 V

USB Type-C® Alternate Modes – what is it?

Example Display Port

Traditional Mode of Operation

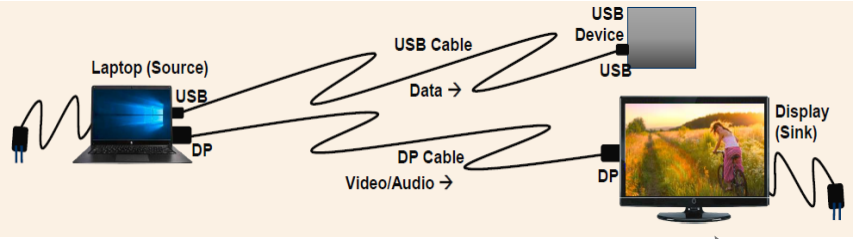

New USB-C Mode of Operation (Video/Data)

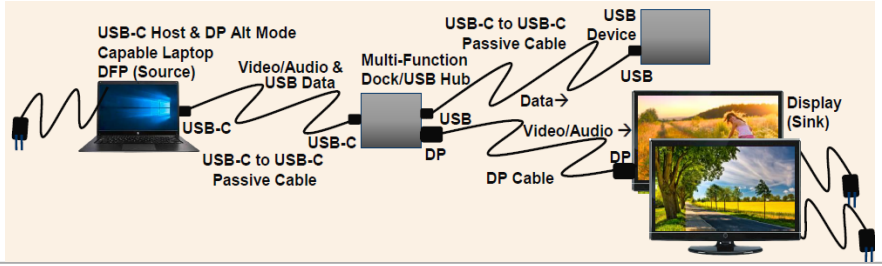

New USB-C Mode of Operation (Video/Power)

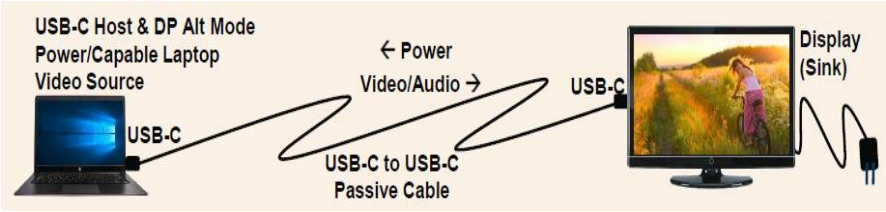

How it works

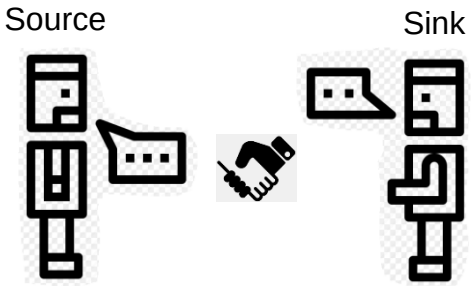

- Negotiating power is simple and robust
  - Source sends its capabilities
  - Sink makes a Request
  - Source Accepts and send PS_Ready
- What happens when Sink needs more power?
  - Sink can indicate it needs more power (cause Capability Mismatch)
  - Source reads Sink's capabilities to determine how much it needs to function
- Additional information between Source and Sink can be exchanged through Extended Capabilities
  - Source supports extended overload peak current
  - Sink load characteristics
- Status provides real-time operational information

Startup sequence for USB Type-C® and PD

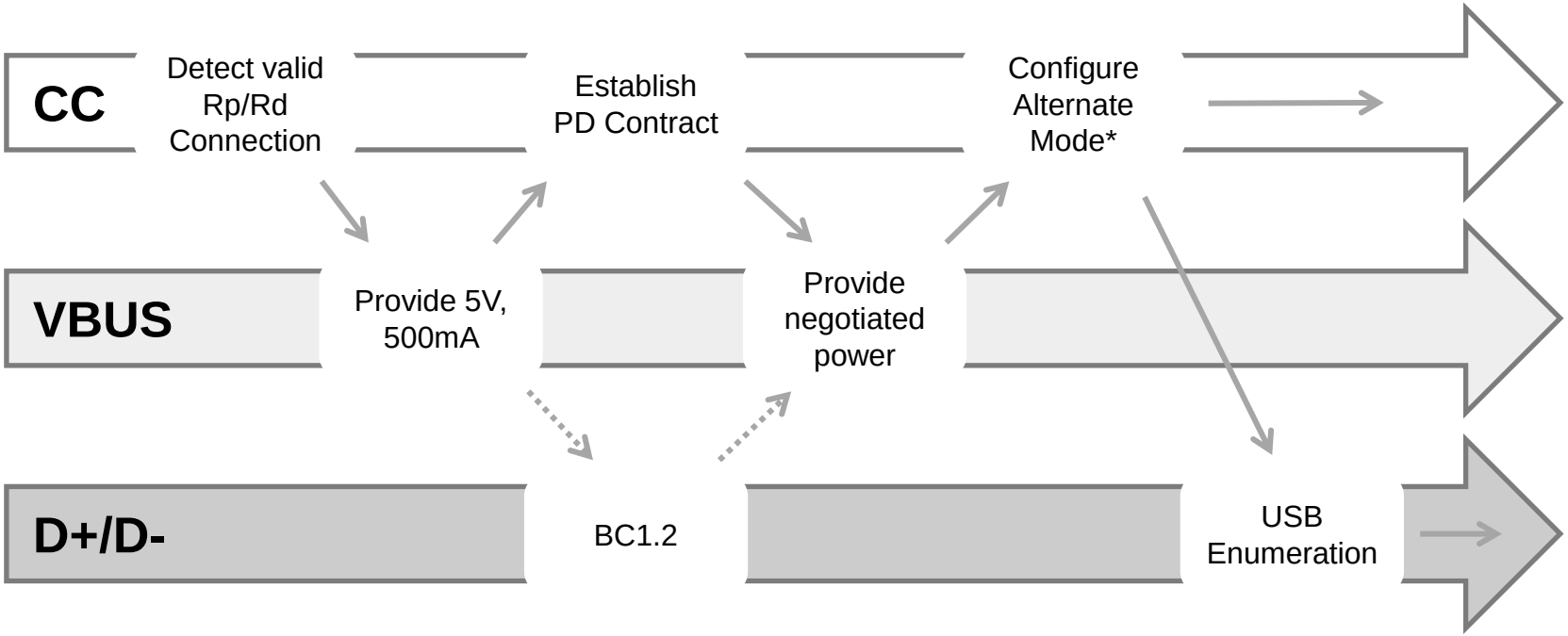

* For non PD applications, miss configure alternate mode step

USB Type-C® PD Alternate Mode negotiation

Scope Trace between a Dock and Notebook establishing a USB PD Contract

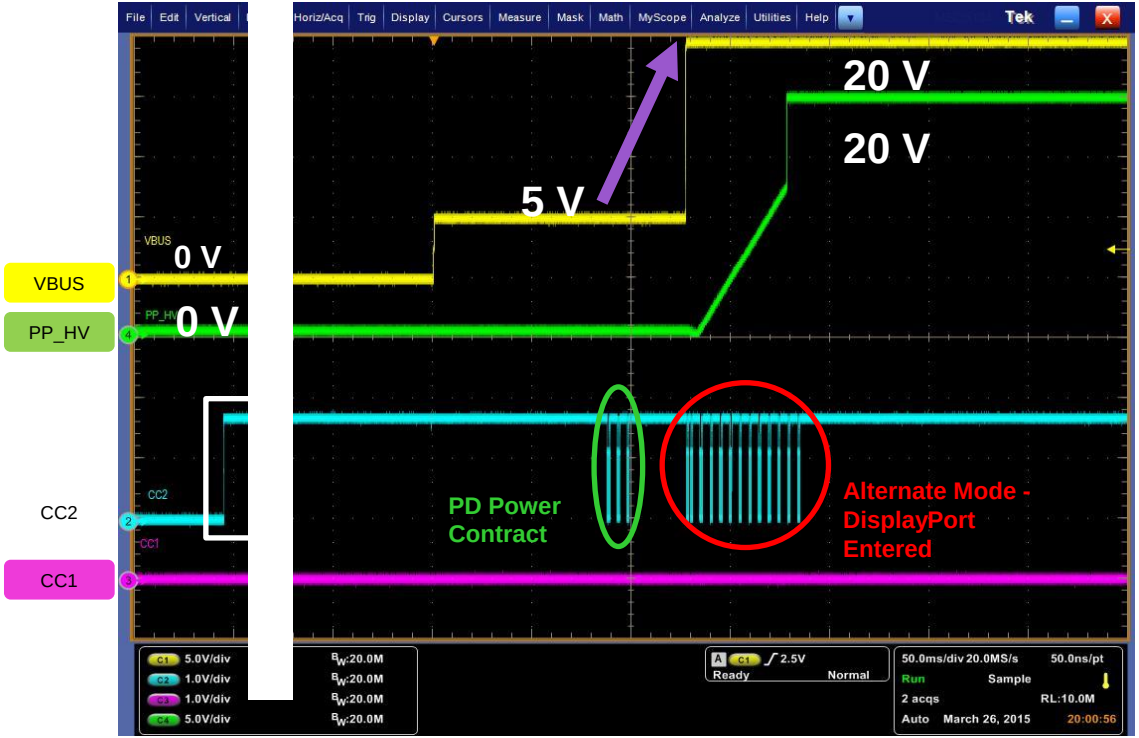

USB Power Delivery Analyzer with PD Controller Firmware
(A Dock acting as a DFP/Source & Notebook acting as the UFP/Sink)

Source Capabilities (Fixed 5V 3A, Fixed 20V 3A)	OUT
Source Capabilities packet (Fixed 5V 3A, Fixed 20V 3A)	OUT
GoodCrc packet	IN
Request (Object 2 = Fixed 20V 3A, Requested 3A, Maximum 3A) › Accepted	IN
Request (Object 2 = Fixed 20V 3A, Requested 3A, Maximum 3A)	IN
Accept	OUT
PsRdy	OUT
PsRdy packet	OUT
GoodCrc packet	IN
Discover Identity › Ack (Undefined)	OUT
Discover Identity	OUT
Discover Identity Ack (Undefined)	IN
Discover SVIDs › Ack (0xFF01)	OUT
Discover SVIDs	OUT
Discover SVIDs Ack (0xFF01)	IN
Discover Modes (SVID = 0xFF01) › Ack (0x001C0045)	OUT
Discover Modes (SVID = 0xFF01)	OUT
Discover Modes (SVID = 0xFF01) Ack (0x001C0045)	IN
Enter Mode (SVID = 0xFF01, Mode = 1) › Ack	OUT
Enter Mode (SVID = 0xFF01, Mode = 1)	OUT
Enter Mode (SVID = 0xFF01, Mode = 1) Ack	IN
SVID Specific Command (0x10) › Ack	OUT
SVID Specific Command (0x10)	OUT
SVID Specific Command (0x10) Ack	IN
SVID Specific Command (0x11) › Ack	OUT
SVID Specific Command (0x11)	OUT
SVID Specific Command (0x11) Ack	IN

Agenda

Introduction to USB Type-C® and Power Delivery

USB Type-C® PD battery charging reference designs

Portfolio walkthrough and value propositions

USB Type-C® PD market adoption

Avionics

- Faster charge for passenger devices
- Display video from passenger devices

Power Tools

- Remove need for proprietary battery chargers
- Offer dual role power to use power tool batteries like a power bank

Barrel jack replacement

- Remove proprietary barrel jack power connectors/chargers
- Aim to not have to include power adapter with products (reduce e-waste)

Battery powered devices

- Remove need for multiple connectors
- Source (provide) and sink (consume) power using the same USB-C connector

Wall plugs

- Charge larger electronics such as tablets and laptops

Speakers

- Support a standardized charging connector
- Enable charging of downstream devices
- Use speaker like a power bank

Medical

- Reduce connector count
- Transmit data & power on the same port

Point of sales

- Reduce connector count
- Transmit data & power on the same port

TI's battery charger solutions *

Features	BQ25790/BQ25792	BQ25730/731
Input Voltage/Battery configuration	3.6V – 24V/ 1-4S	3.5V – 26V/ 1-5S
Charging Current	Up to 5A	Up to 16.2A
Integrated ADC	Yes 16 Bit	Yes 8 Bit
Package	CSP (2.9mm x 3.3mm) and QFN (4mm x 4mm) Package Available	QFN (4mm x 4mm) Package Available
Power Path	Yes	Yes (BQ25730 Only)

TI's USB C PD controller solutions *

Features	TPS25750S	TPS25750D
Power Roles	Source/Sink or Sink Only	Source/Sink or Sink Only
Integrated Power Path	5V source only + external NFET control	5V source only + HV bi-directional
Control Mode	I2C/GPIO	I2C/GPIO
Package	QFN (4mm x 4mm)	QFN (4mm x 6mm)

* TI has more battery charger and USB C PD solutions. These are just highlighted within our charging reference designs

Low power optimized charging solution for 1-4S battery

USB-C Port

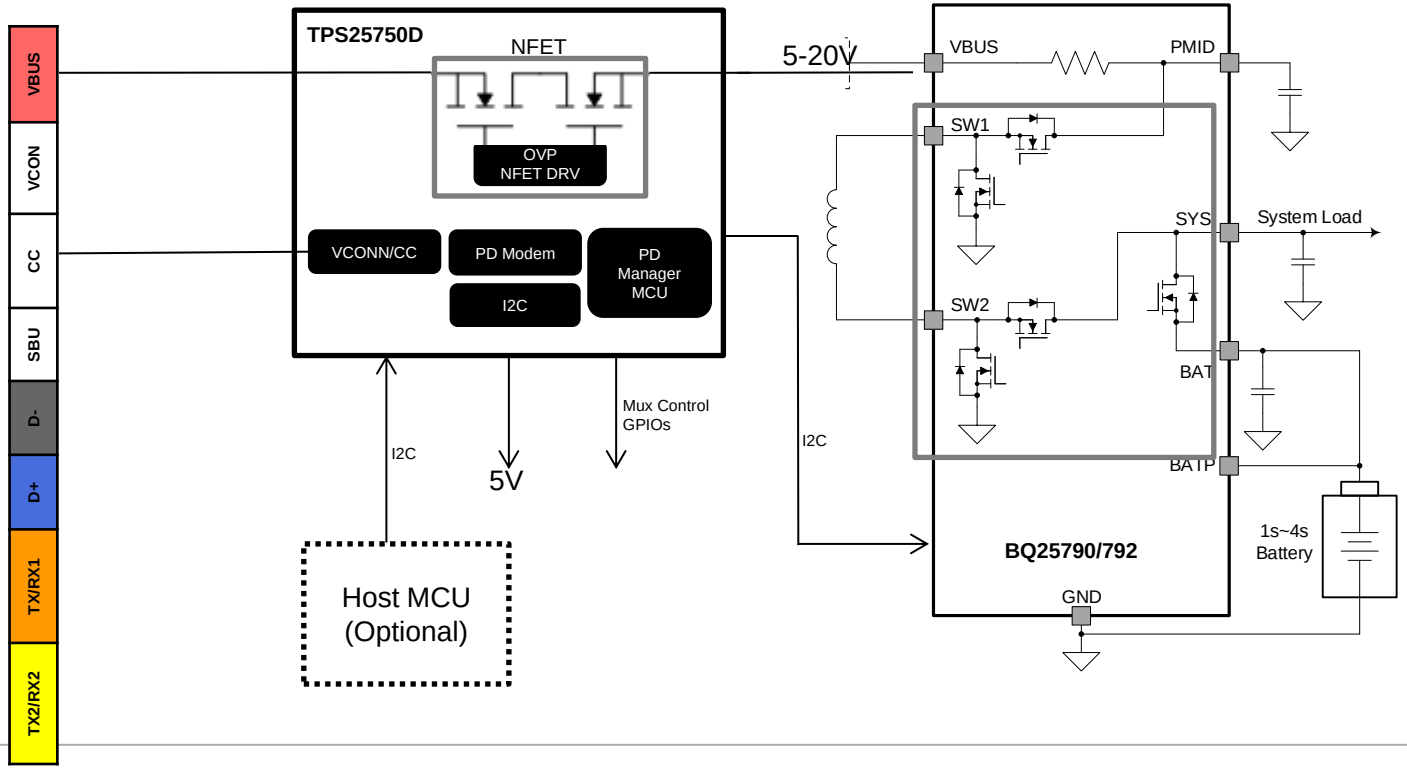

- Options 45W, 27W, & 15W Source and Sink settings
- Options to select preferred power role and preferred data role
- I2C Master control for BQ25790/792 only
- 1-4S Li-ion charging from 5-20V input
- I2C Pass-through option so Host MCU can communicate with Charger through PD Controller
- **Total integrated solution to reduce BOM material and solution size**

High power optimized charging solution for 1-5S battery

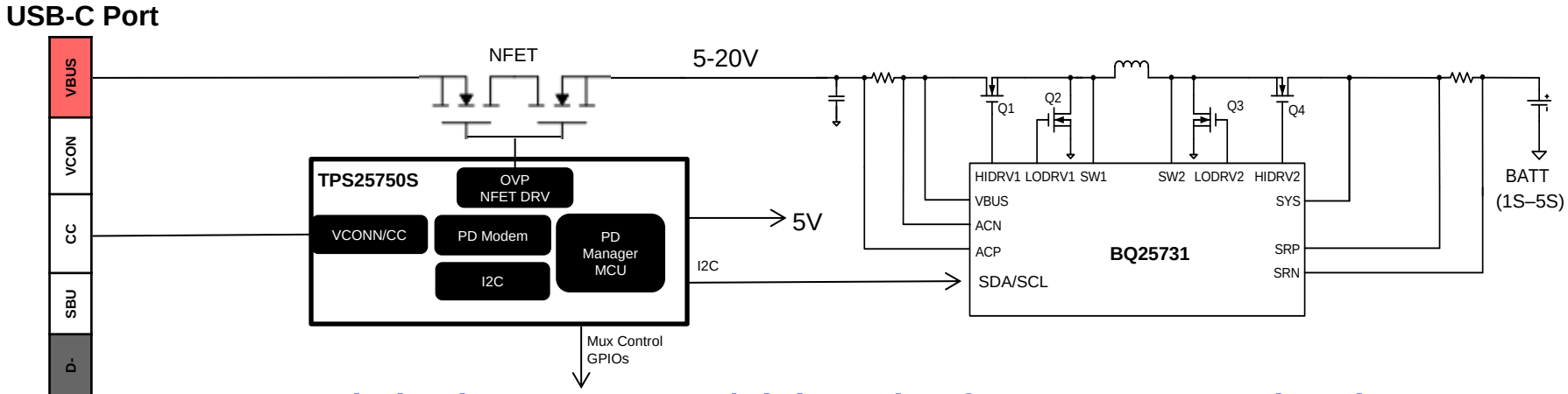

Optimized Power Source/Sink Design for 1-5S Battery Charging

- Options for **100W, 60W**, 45W, 27W, & 15W Source and Sink settings
- Options to select preferred power role and preferred data role
- I2C Master control for BQ25731 only, no MCU required
- 1-5S Li-ion charging from 5-20V input
- High power solution to charge up to 100W

Integrated vs. non-integrated solution

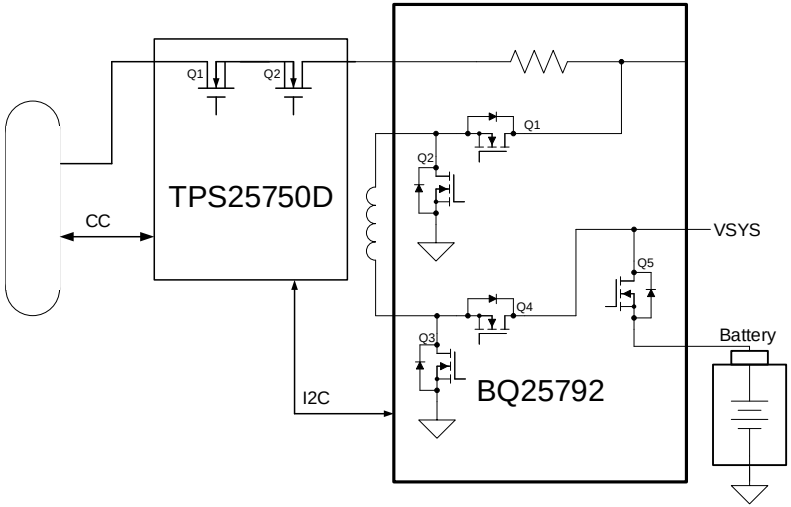

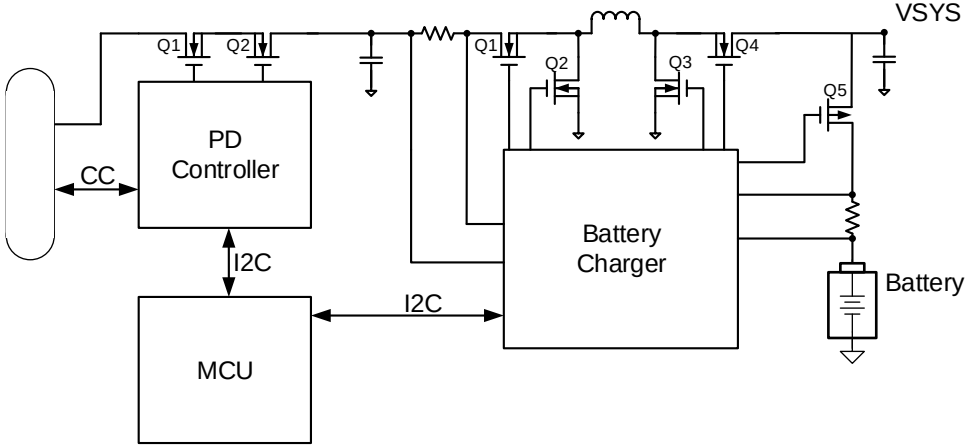

- Simple to use, two-chip solution:
  - No need for external FETs (7 total system FETs integrated)
  - Smallest total solution size (~50mm^2 typ.)
- No need for external MCU:
  - PD Controller is I2C Master for Battery Charger
- Configured using simple web-based GUI tool:
  - No need to write any MCU or PD controller code

- Complex, multi-chip solution:
  - Total of 7 external FETs needed for USB-C charging solution
  - Large total solution size (~110mm^2 typ.)
- External MCU required:
  - MCU required to interface with PD controller and write to Battery charger. → Customer needs to develop MCU code

Integrated vs. non-integrated solution cont.

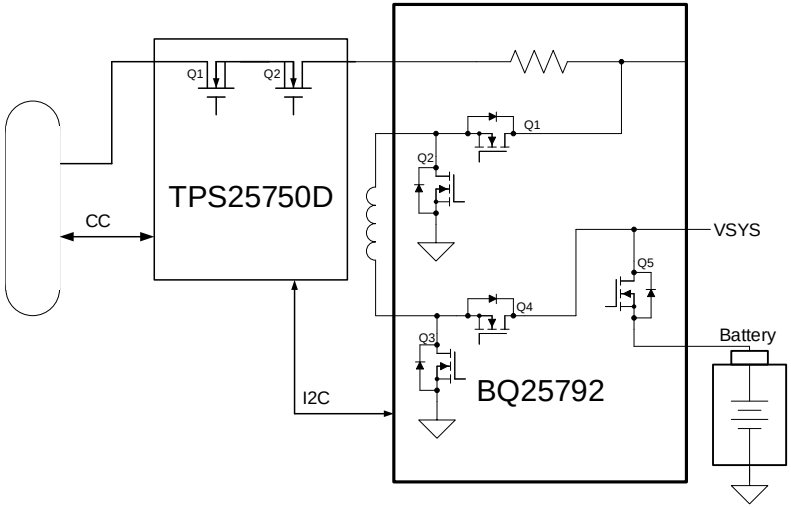

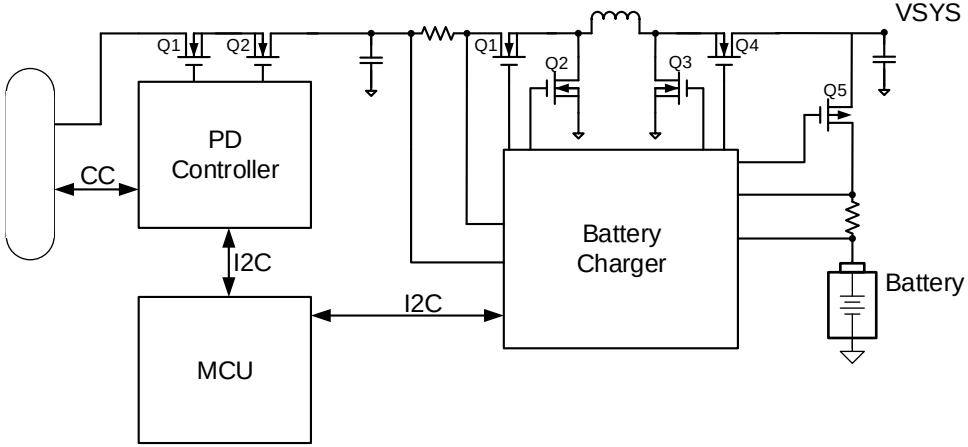

More Information

Agenda

Introduction to USB Type-C® and Power Delivery

USB Type-C® PD battery charging reference designs

Portfolio walkthrough and value propositions

Broad portfolio of TI's USB products

USB Type-A, BC1.2

Products

- TPS2547
- TPS2513A/14A
- TPS2549

Winning Application

- Laptop/PC
- Powerbank
- Wall Charger
- Car charger

Standard Type-C 15W Max, USB Data

Products

- TPS25810
- TPS25820
- TPD2S300 (CC OVP)

Winning Applications

- Set-Top Box
- Laptop/PC
- Powerbank
- Wall Charger
- Car charger

Type-C & Full PD Power + Data/Video

Products

- TPS65987DH/TPS65988
- TPS25750
- TPD6S300A (CC/SBU OVP)

Winning Application

- Laptop/PC
- Monitor
- Tablet
- Dock/Dongle
- Infotainment

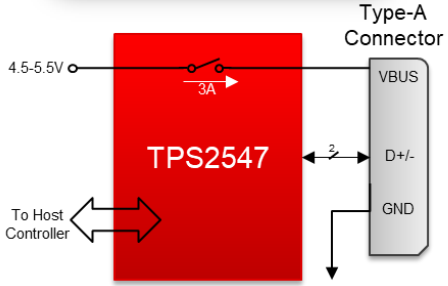

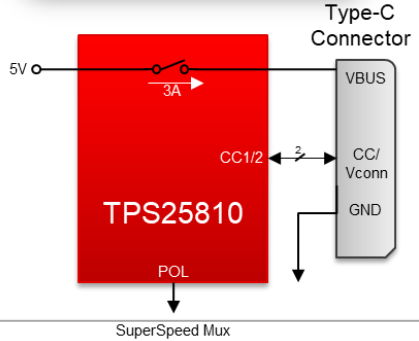

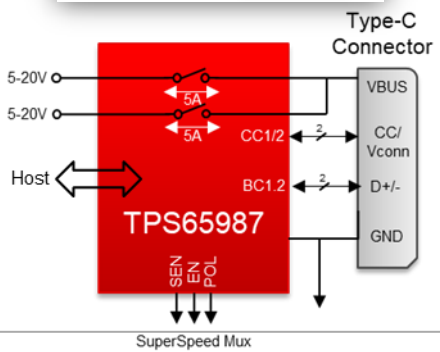

TPS25750D | Single USB Type-C® DRP USB-PD Controller

Features

- Controls One USB Type-C ® Power Delivery port
- **Integrated 5 A 18m Ω bidirectional power path**
- **Integrate 5 V Source power path**
- Configurable as Source/Sink or Sink Only power roles
- Configurable data role and power role preference
- Comprehensive power path management
- **Comprehensive power path protection**
- **I2C Control for BQ257xx device**
- GPIOs for external USB3 mux and fault detection
- Dead-battery Rd
- 4x6 QFN (0.4mm pitch)
- External I2C EEPROM required to store configuration data
- **Configuration options selected via "Binary Vending Machine" GUI**

Benefits

- Fully Integrated USB Type-C and PD Solution
  - No additional discrete IC's needed for full CC Function
  - UL Certification
- Compliant to the USB Type-C 1.x and USB PD 3.x Specifications
- Industry's smallest solution size

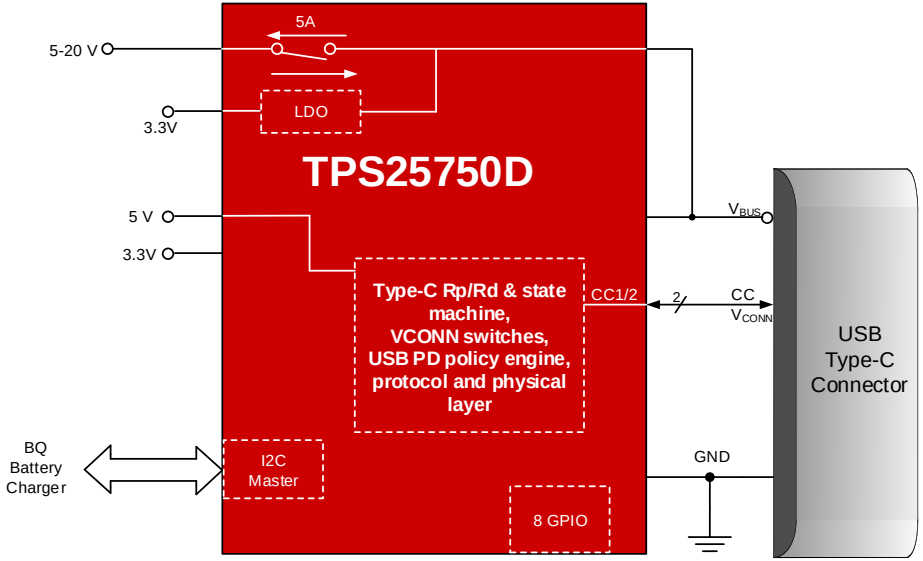

TPS25750D vs. competition PD controllers

TPS25750D Solution

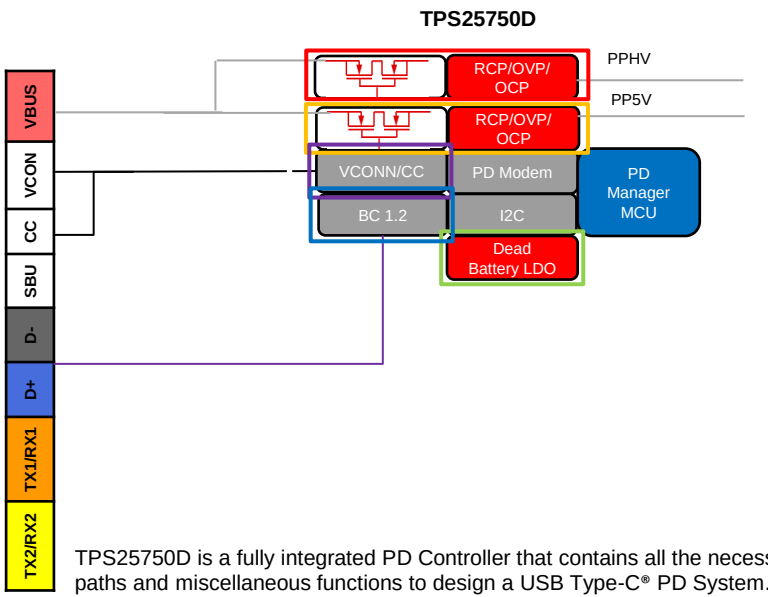

TPS25750D is a fully integrated PD Controller that contains all the necessary power paths and miscellaneous functions to design a USB Type-C® PD System.

- Only external component required is an I2C EEPROM for storing configuration and FW Patch information.
- 32kB for ping-pong image, 16kB for single image ($0.19, $0.16 at Digikey)

Competitor Solution

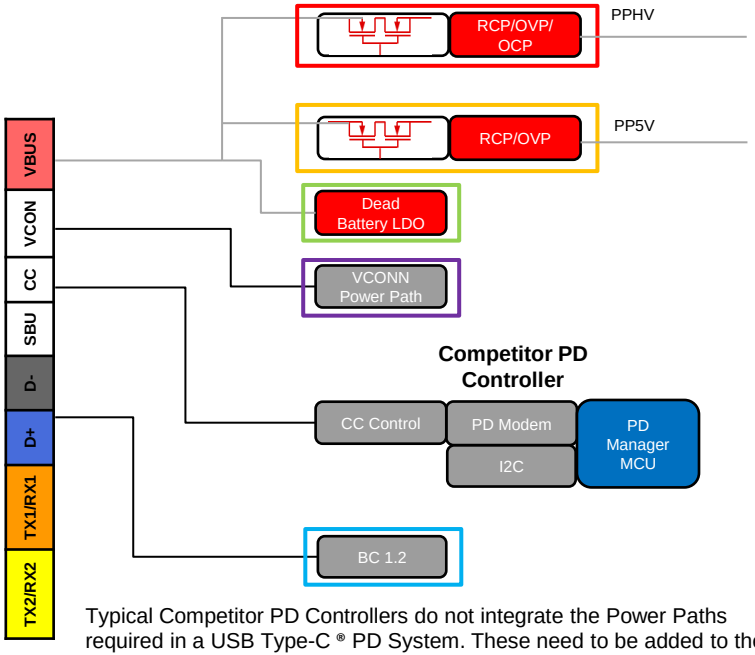

Typical Competitor PD Controllers do not integrate the Power Paths required in a USB Type-C ® PD System. These need to be added to the system by either designing a discrete power path, or purchasing a 5V or HV load switch.

TPS25750S | Single USB Type-C® DRP USB-PD Controller

Features

- Controls One USB Type-C® Power Delivery port
- Configurable as Source/Sink or Sink Only power roles
- **Integrated 5 V Source power path**
- Configurable data role and power role preference
- **External VBUS 30V gate drivers (N-ch) with RCP**
- Comprehensive power path management
- **Comprehensive power path protection**
- **I2C Control for BQ257xx device**
- GPIOs for external USB3 mux and fault detection
- Dead-battery Rd
- 4x4 QFN (0.4mm pitch)
- External I2C EEPROM required to store configuration data
- **Configuration options selected via "Binary Vending Machine" GUI**

Benefits

- Fully Integrated USB Type-C® and PD Solution
  - No additional discrete IC's needed for full CC Function
  - UL Certification
- Compliant to the USB Type-C® 1.x and USB PD 3.x Specifications
- Industry's smallest solution size

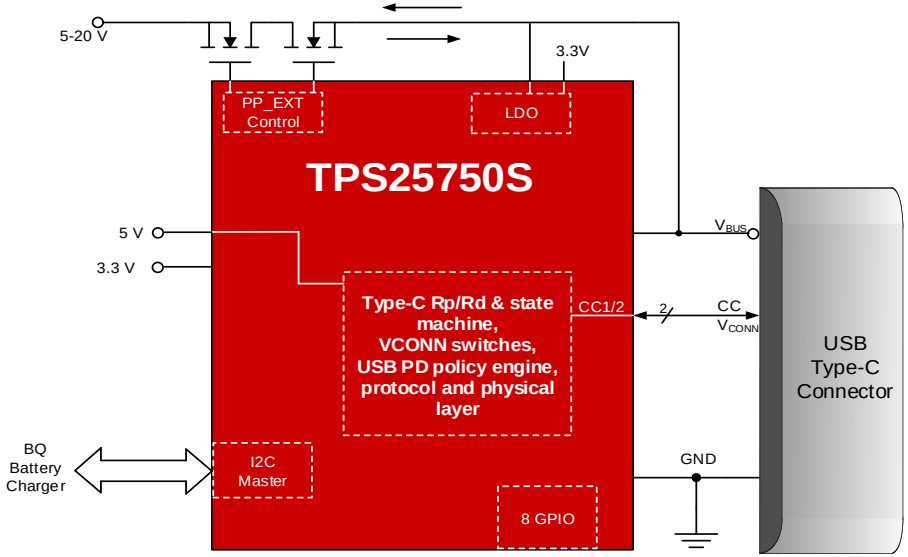

TPS25750S vs. Competition PD Controllers

TPS25750S Solution

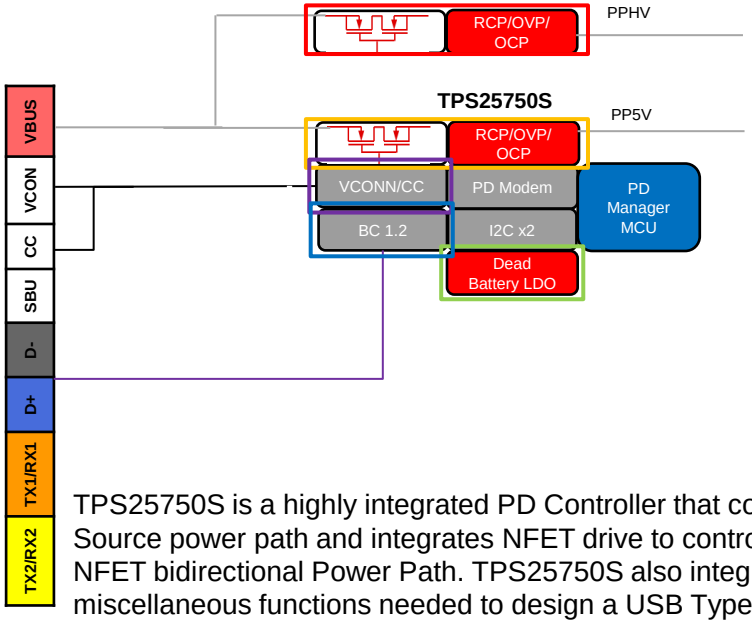

TPS25750S is a highly integrated PD Controller that contains the 5V Source power path and integrates NFET drive to control an external NFET bidirectional Power Path. TPS25750S also integrates miscellaneous functions needed to design a USB Type-C ® PD System.

- External I2C EEPROM is required for storing configuration and FW Patch information.
- External NFETs can be added for high voltage (>5V) Sourcing and Sinking
  - TPS25750S integrates RCP, OVP, & UVP on external NFET Power Path

Competitor Solution

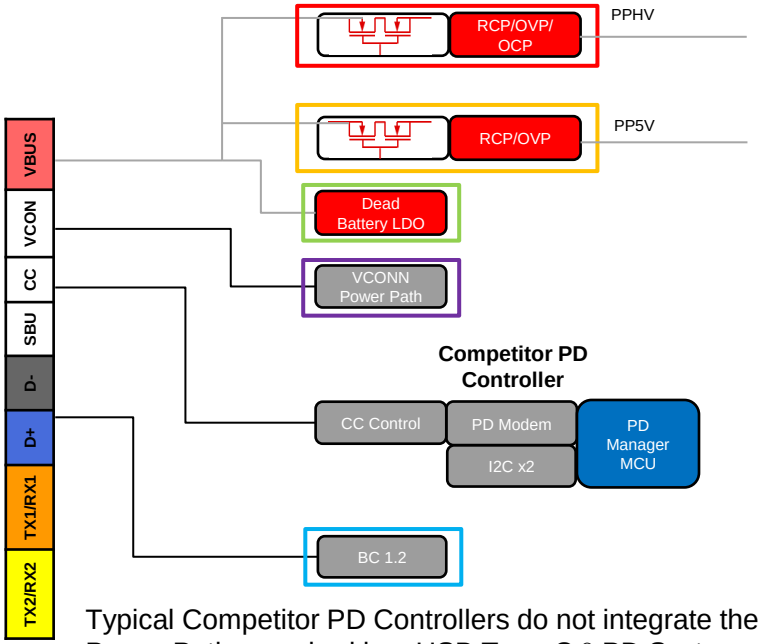

Typical Competitor PD Controllers do not integrate the Power Paths required in a USB Type-C ® PD System. These need to be added to the system by either designing a discrete power path, or purchasing a 5V or HV load switch.

Hero products

Feature	TPS2547/ TPS2511	TPS25810	TPS65987DH	TPS25750	TPS65994	TPD6S300A	TPS66020	TPS66120
Package	3 mm x 3 mm WQFN	3 mm x 4 mm WQFN	7 mm x 7 mm QFN	4 mm x 4 mm or 4 mm x 6 mm QFN *	6 mm x 6 mm QFN	3 mm x 3mm WQFN	1.6 mm x 2.8 mm WCSP	1.6 mm x 2.8 mm WCSP
USB Type-A	✓							
USB Type-C®		✓	✓	✓	✓	✓	Sink & Source	Sink only
PD Control			✓	✓	✓			
Internal Power Switch		✓	✓	✓ **	✓		✓	✓
No. of Ports	1	1	1	1	2	1	1	1
Protection				✓		✓		
Benefits	• BC1.2 tested with 100+ devices! • TPS2511 is the lowest cost power only type-A solution.	• Simple, easy to use • Integrated Vbus discharge, VCONN support, and load detection • Replaces 2 chip solution!	• Smaller size, higher integration, higher performance • 2 integrated power FETs both capable of 100W	• Ability to control a TI battery charger without hassle on customers end • Optimized for new Type-C® PD customers	• Optimized solution for IPC • Supports Industrial Tigerlake Platform • Saves board space & reduces overall BOM cost	• Integrated OVP, short and ESD protection in one chip saves design time, board space and cost	• Replaces 2 NXP switches (sink and source) • Saves board space and improves R_{ds_on}	• Saves board space • Improves R_{ds_on} • High Voltage Dead Battery LDO