SmartRF Transceiver Evaluation Board "TrxEB"

User's Guide

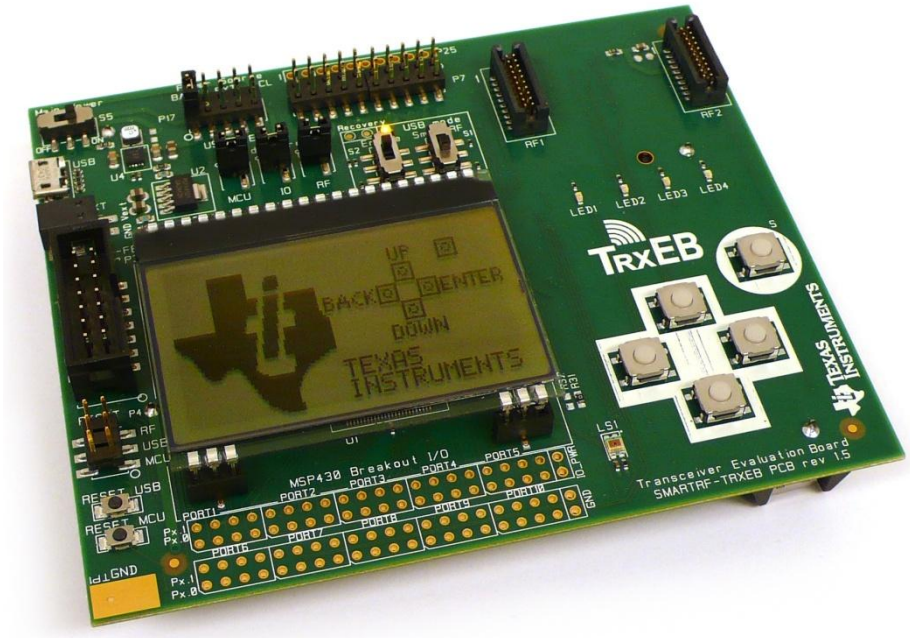

SWRU294A

Table of Contents

TABLE OF CONTENTS **2**
LIST OF FIGURES **4**
LIST OF TABLES **4**
1 INTRODUCTION **5**
2 ABOUT THIS MANUAL **5**
3 ACRONYMS AND ABBREVIATIONS **6**
4 GETTING STARTED **7**
4.1 SmartRF Studio 7
4.2 Installing SmartRF Studio and USB drivers 7
4.2.1 Cebal USB driver *7*
4.2.2 Virtual COM port USB driver *8*
5 USING THE SMARTRF TRANSCEIVER EVALUATION BOARD **9**
5.1 Absolute maximum ratings 10
6 SMARTRF TRANSCEIVER EVALUATION BOARD OVERVIEW **11**
6.1 USB MCU 12
6.1.1 SmartRF Mode *13*
6.1.2 UART Mode *13*
6.1.3 Disabled Mode *14*
6.2 MSP430 MCU 15
6.3 Power Sources 15
6.3.1 Battery Power *16*
6.3.2 USB Power *16*
6.3.3 External Power Supply *17*
6.3.4 MSP-FET Power *18*
6.4 LCD 18
6.5 Accelerometer 18
6.6 Ambient Light Sensor 18
6.7 Serial Flash 18
6.8 Buttons 19
6.9 LEDs 19
6.9.1 General Purpose LEDs *19*
6.9.2 USB LED *19*
6.10 EM Connectors 20
6.11 Breakout Headers and Jumpers 23
6.11.1 EM I/O breakout headers *23*
6.11.2 MSP430 I/O breakout *23*
6.12 Current Measurement Jumpers 26
7 CONNECTING AN EXTERNAL MCU TO SMARTRF TRXEB **28**
7.1 Disable MCUs onboard SmartRF TrxEB 28
7.2 Select power source 28
7.2.1 Power external MCU from SmartRF TrxEB *28*
7.2.2 Power SmartRF TrxEB from external power source *28*
7.3 Connect signals 29
7.3.1 Common signals *29*
7.3.2 Transceiver GPIO signals *29*
8 SMARTRF TRXEB REV. 1.3.0 ..... **30**
8.1 Board Overview 30
8.2 Software Considerations 30
8.2.1 Virtual COM port over USB *30*
8.2.2 Accelerometer *30*
8.3 USB MCU pin-out 31
8.4 MSP430 MCU pin-out 31
9 SMARTRF TRXEB REV. 1.5.0 ..... **32**
9.1 Board Overview 32
9.2 Changes from rev. 1.3.0 32

9.2.1 RC filter on USB MCU reset line 32
9.2.2 Accelerometer 32
9.2.3 Silk print 33
9.3 USB MCU PIN-OUT 33
9.4 MSP430 MCU PIN-OUT 33
10 SMARTRF TRXEB REV. 1.7.0 34
10.1 BOARD OVERVIEW 34
10.2 CHANGES FROM REV. 1.5.0 34
10.2.1 Switch added to enable combo EM support 34
10.2.2 Connector type for external power sources 35
10.2.3 Connector type for LCD 35
10.2.4 Ground pad between P17 and P7 35
10.2.5 Silk print 36
10.3 USB MCU PIN-OUT 36
10.4 MSP430 MCU PIN-OUT 36
11 UPDATING THE FIRMWARE 37
11.1 FORCED BOOT RECOVERY MODE 38
11.2 BOARD RESURRECTION 39
12 FREQUENTLY ASKED QUESTIONS 41
13 REFERENCES 43
14 DOCUMENT HISTORY 44

List of Figures

Figure 1 – Install virtual COM port USB driver using the Windows Hardware Wizard 8
Figure 2 – SmartRF TrxEB (rev. 1.5.0) with EM connected 9
Figure 3 – SmartRF TrxEB architecture 11
Figure 4 – Flow chart of the USB MCU bootloader and standard firmware 12
Figure 5 – UART lines connected between the USB MCU and the onboard MSP430 MCU. 14
Figure 6 – Main power selection header (P17) and power switch (P5) 15
Figure 7 – P17 jumper settings to power TrxEB using batteries 16
Figure 8 – P17 jumper settings to power TrxEB via the USB cable 16
Figure 9 – P17 jumper settings to power TrxEB using external power supply 17
Figure 10 – Powering TrxEB rev. ≤1.5.0 via the external power supply connector (P201) 17
Figure 11 – TrxEB rev. 1.7.0 external power supply header (P1) 17
Figure 12 – P17 jumper settings to power EB using a MSP-FET 18
Figure 13 – SmartRF TrxEB EM connectors RF1 and RF2 20
Figure 14 – EM interface 20
Figure 15 – SmartRF TrxEB I/O breakout overview 23
Figure 16 – I/O connector P25A-E PCB layout 23
Figure 17 – MSP430 I/O breakout on SmartRF TrxEB 23
Figure 18 – Current measurement jumpers 26
Figure 19 – Current measurement setup 26
Figure 20 – Switch and jumper settings to disable both SmartRF TrxEB MCUs 28
Figure 21 – Power external MCU board by connecting it to IO_PWR and GND 28
Figure 22 – P7 with strapping to connect external MCU to SmartRF TrxEB 29
Figure 23 – SmartRF TrxEB revision 1.3.0 overview 30
Figure 24 – Accelerometer axes on SmartRF TrxEB rev. 1.3.0 30
Figure 25 – SmartRF TrxEB revision 1.5.0 overview 32
Figure 26 – Accelerometer axes on SmartRF TrxEB rev. ≥1.5.0 32
Figure 27 – Correct silk print for MCLK and SMCLK test points 33
Figure 28 – SmartRF TrxEB revision 1.7.0 overview 34
Figure 29 – Signal overview for switch TS3A44159 added for SmartRF TrxEB rev. 1.7.0 35
Figure 30 – Added ground pad on SmartRF TrxEB rev. 1.7.0. 35
Figure 31 – Firmware upgrade steps in SmartRF Studio 37
Figure 32 – Enter forced boot recovery mode 38
Figure 33 – Proper connection for board resurrection. 39

List of Tables

Table 1 – Available features on the SmartRF TrxEB 5
Table 2 – Supply voltage: Recommended operating conditions and absolute max. ratings 10
Table 3 – Temperature: Recommended operating conditions and storage temperatures 10
Table 4 – SmartRF TrxEB operating modes 13
Table 5 – Data rates supported by the USB MCU in UART Mode 13
Table 6 – USB LED state descriptions 19
Table 7 – EM connector RF1 pin-out 21
Table 8 – EM connector RF2 pin-out 22
Table 9 – MSP430 Port 1-5 pin-out 24
Table 10 – MSP430 Port 6-10 pin-out 25
Table 11 – Component/Power segment overview 27
Table 12 – Strapping overview to connect common signals to an external MCU 29
Table 13 – Strapping overview to strap CC1120 GPIO to an external MCU 29
Table 14 – USB MCU pin-out on SmartRF TrxEB rev. 1.3.0 31
Table 15 – MSP430 miscellaneous signal pin-out 31
Table 16 – S1 control over TS3A44159 switch for SmartRF TrxEB rev. 1.7.0 35
Table 17 – USB MCU pin-out on SmartRF TrxEB rev. 1.7.0 36

1 Introduction

The SmartRF Transceiver Evaluation Board (SmartRF TrxEB or simply EB) is the motherboard in a number of development kits for Low Power RF transceiver devices from Texas Instruments. The board has a wide range of features, listed in Table 1 below.

Component	Description
MSP430 MCU	The Ultra-low Power MSP430 serves as a platform for software development, testing and debugging.
Full-speed USB 2.0 interface	Easy plug and play access to full transceiver control using SmartRF™ Studio PC software. Integrated serial port over USB enables communication between onboard MSP430 and PC.
64x128 pixels serial LCD	Big LCD display for demo use and user interface development.
LEDs	Four general purpose LEDs for demo use or debugging.
Serial Flash	External flash for extra storage, over-the-air upgrades and more.
Buttons	Five push-buttons for demo use and user interfacing.
Accelerometer	Three-axis highly configurable digital accelerometer for application development and demo use.
Light Sensor	Ambient Light Sensor for application development and demo use.
Breakout pins	Easy access to GPIO pins for quick and easy debugging.

Table 1 – Available features on the SmartRF TrxEB

2 About this manual

This manual contains reference information about the SmartRF TrxEB.

Chapter 4 will give a quick introduction on how to get started with the SmartRF TrxEB. It describes how to install SmartRF Studio and to get the required USB drivers for the evaluation board. Chapter 5 briefly explains how the EB can be used throughout a project's development cycle. Chapter 6 gives an overview of the various features and functionality provided by the board.

Chapter 8, 9 and 10 provide additional details about the different versions of SmartRF TrxEB, revision 1.3.0, 1.5.0 and 1.7.0, respectively. Chapter 11 gives details on how to update the EB firmware, while a troubleshooting guide is found in chapter 12.

Appendices A, B and C contain the schematics for the different versions of SmartRF TrxEB.

The PC tools SmartRF Studio and SmartRF Flash Programmer have their own user manual.

See chapter 13 for references to relevant documents and web pages.

3 Acronyms and Abbreviations

ACM	Abstract Control Model
ALS	Ambient Light Sensor
CEBAL	CC Evaluation Board Abstraction Layer
CDC	Communication Device Class
CTS	Clear to Send
CW	Continuous Wave
DK	Development Kit
DUT	Device Under Test
EB	Evaluation Board
EM	Evaluation Module
IC	Integrated Circuit
I/O	Input/Output
KB	Kibi Byte (1024 byte)
LCD	Liquid Crystal Display
LED	Light Emitting Diode
LPRF	Low Power RF
MCU	Micro Controller
MISO	Master In, Slave Out (SPI signal)
MOSI	Master Out, Slave In (SPI signal)
NA	Not Applicable / Not Available
NC	Not Connected
PER	Packet Error Rate
RF	Radio Frequency
RX	Receive
RTS	Request to Send
SoC	System on Chip
SPI	Serial Peripheral Interface
TI	Texas Instruments
TrxEB	Transceiver Evaluation Board
TX	Transmit
TRX	Transmit / Receive
UART	Universal Asynchronous Receive Transmit
USB	Universal Serial Bus

4 Getting Started

Before connecting the SmartRF TrxEB to the PC via the USB connector, it is highly recommended to install the USB drivers needed for proper communication between the TrxEB and applicable PC tools. The drivers are bundled and installed together with SmartRF™ Studio.

4.1 SmartRF Studio

SmartRF Studio is a PC application developed for evaluation of the low power RF IC products from Texas Instruments. The application is designed for use with SmartRF Evaluation Boards, such as SmartRF TrxEB, and runs on Microsoft Windows operating systems.

SmartRF Studio gives the user full overview of and access to the devices' registers for configuration of the radio parameters and behavior. It also provides a control interface for performing operations like sending and receiving packets and setting up a continuous wave signal. In addition, it offers a flexible system for exporting radio register values to a user defined format for easy integration in software.

The latest version of SmartRF Studio can be downloaded from the Texas Instruments website [1].

4.2 Installing SmartRF Studio and USB drivers

Before your PC can communicate with the SmartRF TrxEB over USB, you will need to install the USB drivers for the EB. The latest SmartRF Studio installer [1] includes the required USB drivers both for Windows x86 and Windows x64 platforms.

After you have downloaded SmartRF Studio from the web, extract the zip-file, run the installer and follow the instructions. Select the complete installation to include the SmartRF Studio program, the SmartRF Studio documentation and the USB drivers. There are two drivers needed for TrxEB: Cebal and a virtual COM port driver.

4.2.1 Cebal USB driver

> **NOTE:** The SmartRF TrxEB must be in "SmartRF Mode" in order to be recognized by the PC as a Cebal device. The EB is in SmartRF Mode when hardware switches S1 and S2 are in positions "SmartRF" and "Enable", respectively. See section 6.1 for more information about the SmartRF TrxEB operating modes.

SmartRF PC software such as SmartRF Studio uses a proprietary USB driver, Cebal, to communicate with evaluation boards. Connect your SmartRF TrxEB to the computer with a USB cable, set the mode switches to "SmartRF" and "Enable", and turn it on. If you did a complete install of SmartRF Studio, Windows will recognize the device automatically and the SmartRF TrxEB is ready for use!

For more information regarding the USB drivers, please consult the SmartRF Studio documentation, the USB driver installation guide [2] or chapter 11.

4.2.2 Virtual COM port USB driver

> **NOTE:** The SmartRF TrxEB must be in "UART Mode" in order to be recognized as a virtual COM port. The EB is in UART Mode when hardware switches S1 and S2 are in positions "UART" and "Enable", respectively. See section 6.1 for more information about the SmartRF TrxEB operating modes.

If you are using SmartRF TrxEB in UART Mode (see section 6.1.2), a standard driver for a virtual COM port over USB is used (USB CDC-ACM). If you did a complete install of SmartRF Studio, Windows will recognize the device automatically. If prompted with the Windows Hardware Wizard, select "Install the software automatically (recommended)" and click next to finish the installation. The SmartRF TrxEB is now ready for use!

If the SmartRF TrxEB CDC-ACM driver is not found by the Hardware Wizard, make sure you have installed the latest version of SmartRF Studio [1]. In the Windows Hardware Wizard, select "Install from a list or specific location (Advanced)". You will see below window.

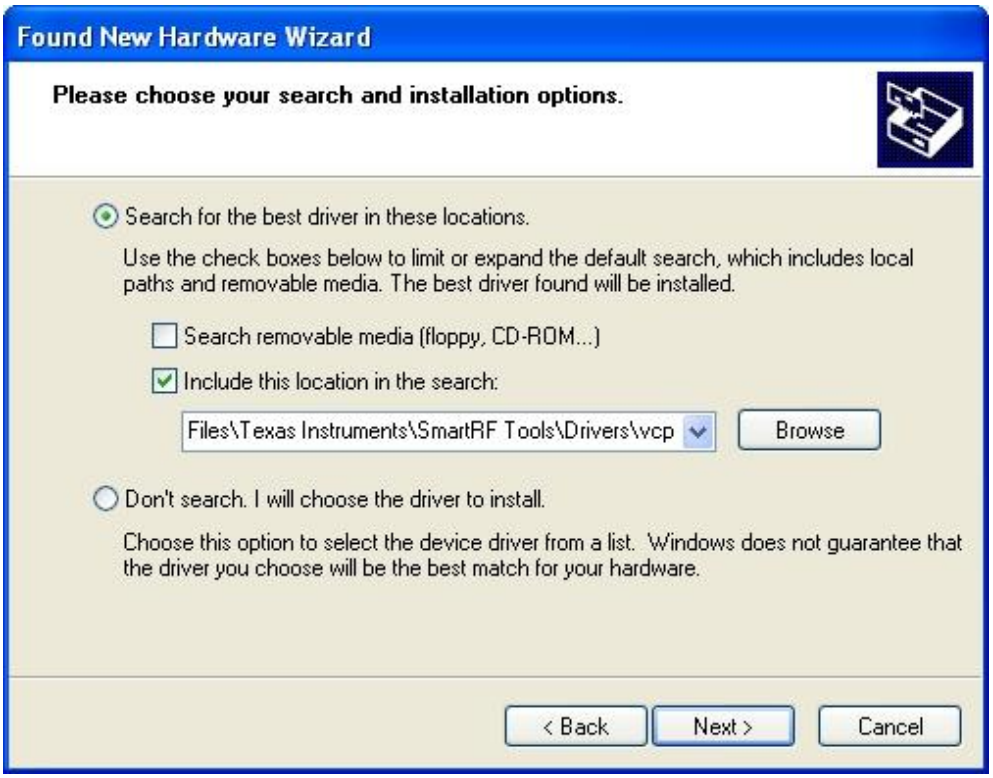

Figure 1 – Install virtual COM port USB driver using the Windows Hardware Wizard

The driver for the Virtual COM Port (VCP) is typically located in the directory *C:\Program Files\Texas Instruments\SmartRF Tools\Drivers\vcp*, where *C:\Program Files\Texas Instruments\SmartRF Tools* is the root installation directory for SmartRF Tools such as SmartRF Studio. The path may be different if you have chosen a different installation directory for SmartRF Studio.

If the above fails, select "Don't Search. I will choose the driver to install." A new window will open, asking for a location of where the drivers can be found. Locate the *trxeb_cdc_uart.inf* file and select that driver for installation.

5 Using the SmartRF Transceiver Evaluation Board

The SmartRF TrxEB is a flexible test and development platform that works together with RF Evaluation Modules from Texas Instruments.

An Evaluation Module is a small RF module with RF chip, balun, matching filter, antenna, and I/O connectors. The modules can be plugged into the SmartRF TrxEB which lets the PC take direct control of the RF device on the EM over the USB interface.

Currently, SmartRF TrxEB supports:

- CC1120EM
- CC1121EM
- CC1175EM
- CC1101EM
- CC1100EM
- CC1100EEM
- CC110LEM
- CC113LEM
- CC115LEM
- CC2520EM

SmartRF TrxEB is included in e.g. the CC1120 development kit. Some of the above EMs comes in variants combined with a RF front-end such as CC1190, CC2590, or CC2591. Such variants are called combo EMs and are also supported by the SmartRF TrxEB[1].

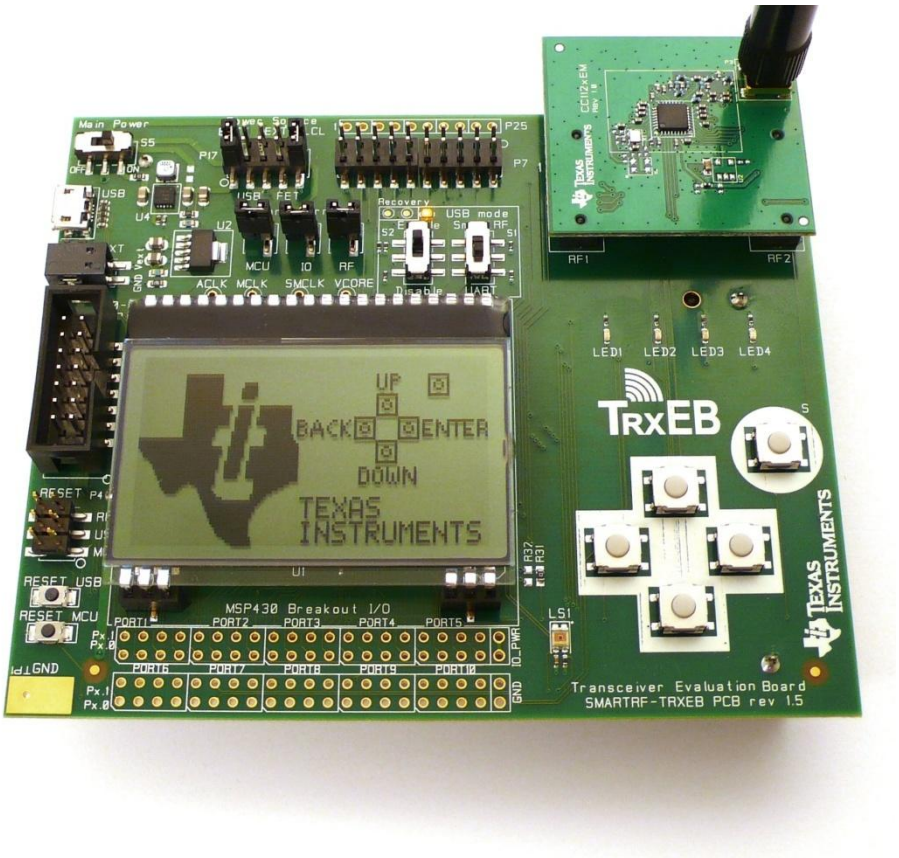

Figure 2 – SmartRF TrxEB (rev. 1.5.0) with EM connected

[1] Some limitations exist for boards prior to version 1.7.0.

The PC software that controls the SmartRF TrxEB + EM is SmartRF Studio. Studio can be used to perform several RF tests and measurements, e.g. to set up a CW signal and send and receive packets.

The EB+EM can be of great help during the whole development cycle for a new RF product.

- Perform comparative studies. Compare results obtained with EB+EM with results from your own system.
- Perform basic functional tests of your own hardware by connecting the radio on your board to SmartRF TrxEB. SmartRF Studio can be used to exercise the radio.
- Verify your own software with known good RF hardware, by simply connecting your own microcontroller to an EM via the EB. Test the send function by transmitting packets from your SW and receive with another board using SmartRF Studio. Then transmit using SmartRF Studio and receive with your own software.
- Develop code for the MSP430 MCU.
- Use the SmartRF TrxEB as a debugger interface to the low power RF 8051-based SoCs with IAR Embedded Workbench.

5.1 Absolute maximum ratings

The minimum and maximum operating supply voltages and absolute maximum ratings for the active components onboard the SmartRF TrxEB are summarized in Table 2. Table 3 lists the recommended operating temperature and storage temperature ratings. Please refer to the respective component's datasheet for further details.

Component	Operating voltage		Absolute max. rating	
	Min. [V]	Max. [V]	Min. [V]	Max. [V]
USB MCU [3]	+3.0	+3.6	-0.3	+3.9
MSP430 MCU [6]	+1.8	+3.6	-0.3	+4.1
LCD [7]	+3.0	+3.3	-0.3	+3.6
Accelerometer [8]	+1.7	+3.6	-0.3	+3.6
Ambient light sensor [9]	+2.3	+5.5	NA	+6
Serial Flash [10]	+2.7	+3.6	-0.4	+4.0

Table 2 – Supply voltage: Recommended operating conditions and absolute max. ratings

Component	Operating temperature		Storage temperature	
	Min. [˚C]	Max. [˚C]	Min. [˚C]	Max. [˚C]
USB MCU [3]	0	+85	-50	+150
MSP430 MCU [6]	-40	+85	-55	+105
LCD [7]	-20	+70	-30	+80
Accelerometer [8]	-40	+85	-40	+125
Ambient light sensor [9]	-40	+85	-40	+85
Serial Flash [10]	-40	+85	-65	+150

Table 3 – Temperature: Recommended operating conditions and storage temperatures

6 SmartRF Transceiver Evaluation Board Overview

SmartRF TrxEB acts as the motherboard in several development kits for low power RF ICs from Texas Instruments. The board has several user interfaces and connections to external interfaces, allowing fast prototyping and testing of both software and hardware.

This chapter will give an overview of the general architecture of the board and describe the available I/O. The following sub-sections will explain the I/O in more detail. Pin connections between the evaluation board I/O and EM can be found in section 6.10.

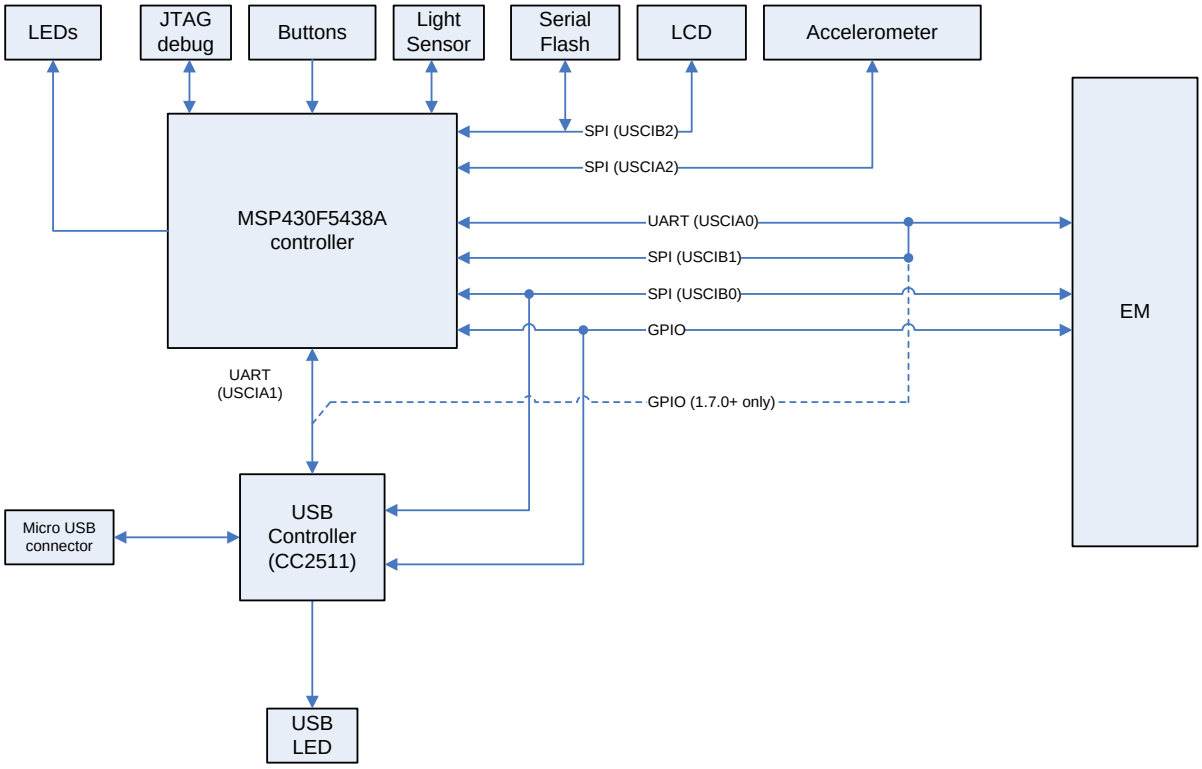

Figure 3 – SmartRF TrxEB architecture

NOTE: Signal names used in this user's guide and in the SmartRF TrxEB schematics, are named "as seen" from the onboard MSP430 MCU. E.g. signal name "P1_3" refers to the signal connected to MSP430 port 1, pin 3.

6.1 USB MCU

The USB MCU is the CC2511F32 from Texas Instruments. Please see the CC2511 product page [3] on the TI web for detailed information about this controller. The recommended operating condition for the CC2511 is a supply voltage between 3.0 V and 3.6 V. The min (max) operating temperature is 0 (+85) ˚C.

The USB controller is programmed with a bootloader and the standard SmartRF TrxEB firmware when it is shipped from the factory. A flow chart over the USB MCU bootloader and standard firmware is shown in Figure 4.

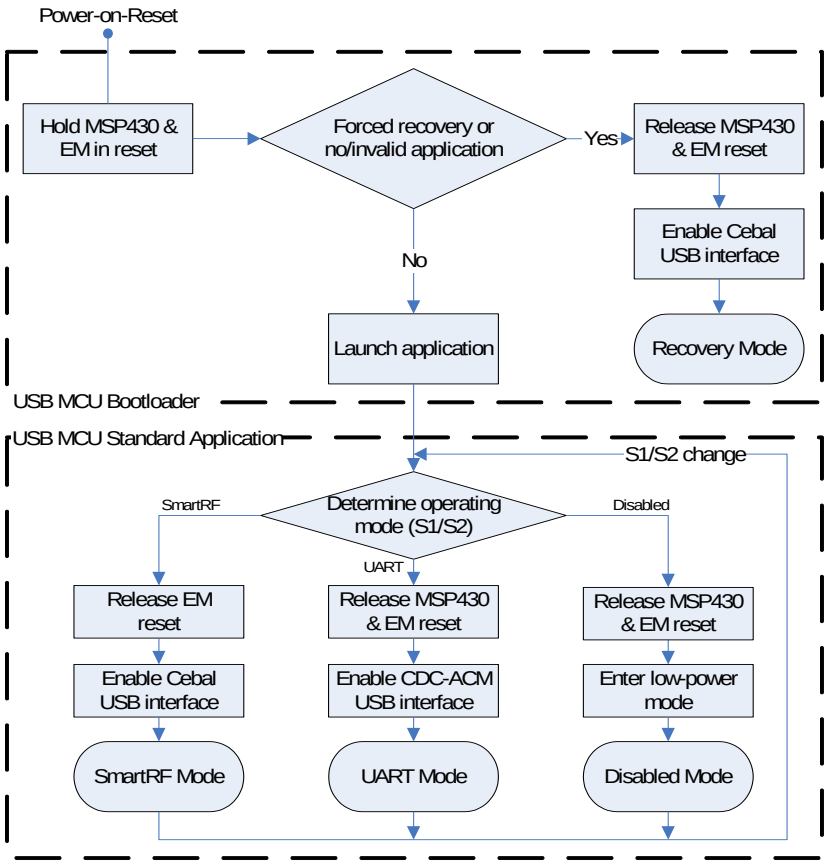

Figure 4 – Flow chart of the USB MCU bootloader and standard firmware

When the bootloader starts running, it will check for a valid application in the CC2511 flash memory. If detection is successful, the application is started and the board can be operated normally. If no application is detected (e.g. blank flash or firmware upgrade failed) the USB LED (D6) will start blinking rapidly – indicating failure. See section 6.9.2 for more details on USB LED states.

The USB MCU bootloader will allow programming/upgrading of the USB MCU firmware over the USB interface. No additional hardware or programmers are needed. Both SmartRF Studio and SmartRF Flash Programmer [4] can be used for this purpose. Please refer to chapter 11 for details.

The standard firmware application has three operating modes, controlled by hardware switches S1 and S2. The three modes are named “SmartRF Mode”, “UART Mode” and “Disabled Mode”. Table 4 shows which S1 and S2 positions that give the different operation modes. The following sections will discuss the different operating modes in more detail.

	S2	S1	Operating Mode	Key features
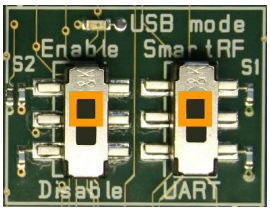	Enable	SmartRF	SmartRF Mode	- Cebal USB interface - MSP430 disabled - Control RF-IC using SmartRF PC software
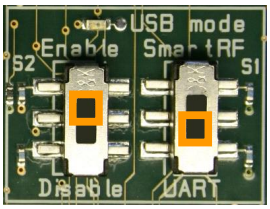	Enable	UART	UART Mode	- CDC-ACM USB interface - MSP430 enabled - UART bridge between PC and MSP430 - Control RF-IC using MSP430 or external MCU
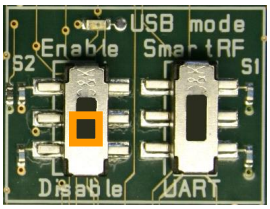	Disable	x	Disabled Mode	- USB interface disabled - MSP430 enabled - Control RF-IC using MSP430 or external MCU

Table 4 – SmartRF TrxEB operating modes

6.1.1 SmartRF Mode

SmartRF Mode is the standard operating mode and is obtained by setting hardware switches S1 and S2 on the EB to “SmartRF” and “Enable”, respectively (see Table 4).

In SmartRF mode the EB is recognized over USB as a Cebal device, enabling PC software like SmartRF Studio to configure and control the RF-IC connected to the EB’s EM connectors.

The onboard MSP430 microcontroller is in this operating mode held in reset by the USB MCU.

6.1.2 UART Mode

UART Mode is obtained by setting hardware switches S1 and S2 on the EB to “UART” and “Enable”, respectively (see Table 4).

In UART mode, the EB is recognized over USB as a virtual serial port (CDC-ACM). The USB MCU works as a UART bridge between the onboard MSP430 and the PC. The hardware connection between the USB MCU and the MSP430 is shown in Figure 5. The supported data rates are listed in Table 5.

It is not possible to use SmartRF Studio or other PC software to communicate with a connected RF-IC when operating in UART Mode. To communicate with a connected RF-IC, the onboard MSP430 or an external MCU must be programmed with custom firmware. Please refer to the MSP430 User’s Guide [5] for more information about the MSP430 MCU.

Data rate [baud]
9 600
38 400
56 700
115 200

Table 5 – Data rates supported by the USB MCU in UART Mode

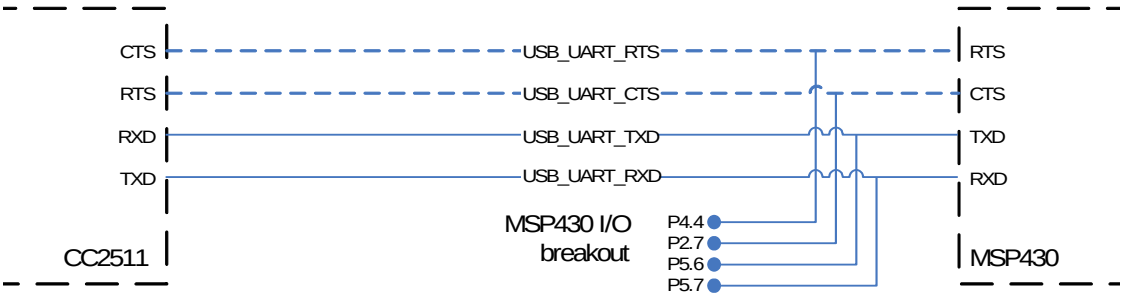

Figure 5 – UART lines connected between the USB MCU and the onboard MSP430 MCU. CTS and RTS lines are dotted to indicate that the USB MCU standard firmware only implements a two-line UART interface to the MSP430 MCU.

NOTE: Figure 5 shows the four hardware connected UART lines between the USB MCU and the MSP430 MCU. The MSP430 does not support hardware flow control (RTS and CTS lines). Such support must be manually implemented in the MSP430 software. To ease MSP430 application development, the standard USB MCU firmware uses a two-line UART interface to the MSP430, i.e. hardware flow control is not implemented.

6.1.3 Disabled Mode

Disabled Mode is obtained by setting hardware switch S2 on the EB to “Disable” position (see Table 4). The position of S1 is disregarded by the USB MCU when S2 is in the “Disable” position.

In Disabled Mode, the USB MCU is in power-down mode and no USB communication is possible between a PC and the EB. It is however still possible to power the EB via the USB cable, see section 6.3.2.

6.2 MSP430 MCU

The SmartRF TrxEB is equipped with an MSP430F5438A micro controller from Texas Instruments. Please see the MSP430F5438A product page [6] on the TI website for detailed information about this controller.

All of the EB's user interface peripherals are available to the MSP430 (Figure 3 on page 11). Excluding the EM, the list of available peripherals consists of

- LCD
- 5x Buttons
- 4x LEDs
- Ambient Light Sensor
- Accelerometer
- SPI Flash.

The recommended operating condition for the MSP430 is a supply voltage (V_{CC}) between 1.8 V and 3.6 V. The min (max) operating temperature is -40 (+85) ˚C.

NOTE: The onboard MSP430 MCU is held in reset by the USB MCU in SmartRF Mode. In order to use the MSP430, make sure the USB MCU is set to Disabled Mode or UART Mode. See section 6.1 for details.

6.3 Power Sources

There are four possible solutions for applying power to the SmartRF TrxEB; batteries, USB bus, external power supply and MSP-FET. The power source can be selected using the power source selection jumpers on header P17 (Figure 6). The main power supply switch (S5) turns off all power sources.

Figure 6 – Main power selection header (P17) and power switch (P5)

WARNING! Do not use multiple power sources to power the SmartRF TrxEB at the same time. Doing so may lead to excessive currents, causing onboard components to break.

WARNING! When using the SmartRF TrxEB with a MSP430 debugger (e.g. MSP-FET430UIF), while powering the EB with a different power source (batteries, USB or external power supply), a jumper should short circuit pin 9-10 of header P17 ("LCL"). This will prevent the MSP-FET from supplying power to the EB.

6.3.1 Battery Power

The SmartRF TrxEB includes a battery holder for two 1.5 V AA batteries on the reverse side of the PCB. Normal AA batteries can be used and the onboard regulator supplies 3.3 V to the board. The power source selection jumpers should short circuit pin 1-2 (“BATT”) and 9-10 (“LCL”) of header P17, see Figure 7.

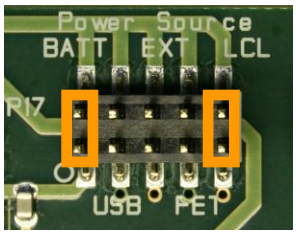

Figure 7 – P17 jumper settings to power TrxEB using batteries

The maximum current consumption is limited by the regulator to 800 mA.

6.3.2 USB Power

When the SmartRF TrxEB is connected to a PC via a USB cable, it can draw power from the USB bus. The onboard voltage regulator supplies approximately 3.3 V to the board. The power source selection jumpers should short circuit pin 3-4 (“USB”) and 9-10 (“LCL”) of header P17 (Figure 8).

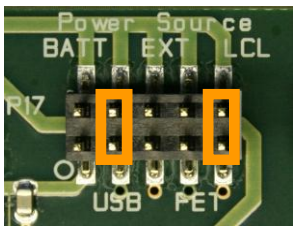

Figure 8 – P17 jumper settings to power TrxEB via the USB cable

The maximum current consumption is limited by the regulator to 1500 mA[2].

[2] Note that most USB power sources are limited to 500 mA.

6.3.3 External Power Supply

The SmartRF TrxEB has a connector for powering the board using an external power supply. The power source selection jumpers should short circuit pin 5-6 (“EXT”) and 9-10 (“LCL”) of header P16 as shown in Figure 9.

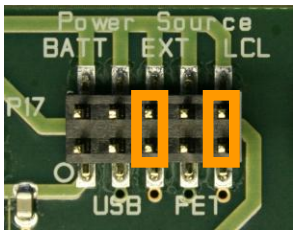

Figure 9 – P17 jumper settings to power TrxEB using external power supply

WARNING! When using an external power source, all onboard voltage regulators are bypassed. There is a risk of damaging the onboard components if the applied voltage on the external power connector/header is lower than -0.3 V or higher than 3.6 V (combined absolute maximum ratings for onboard components. See section 5.1 for further information.

6.3.3.1 SmartRF TrxEB revision ≤1.5.0

The external supply’s ground should be connected to pin 2 of P201. Apply a voltage in the range from 3.0 V to 3.3 V to pin 1 (see Figure 10). Pin 1 and pin 2 of P201 are marked “Vext” and “GND”, respectively, on SmartRF TrxEB revision 1.5.0.

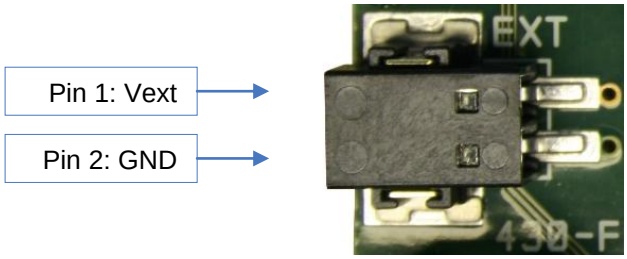

Figure 10 – Powering TrxEB rev. ≤1.5.0 via the external power supply connector (P201)

6.3.3.2 SmartRF TrxEB revision 1.7.0

The external supply’s ground should be connected to the TrxEB ground, e.g. to the ground pad in the bottom left corner of the EB. Connect the positive supply connector to either of the two pins on the external power header P1 (Figure 11). The applied voltage must be in the range from 3.0 V to 3.3 V.

Figure 11 – TrxEB rev. 1.7.0 external power supply header (P1)

6.3.4 MSP-FET Power

The SmartRF TrxEB can be powered via an MSP430 debugger such as MSP-FET430UIF. The power source selection jumpers should in that case short circuit pin 7-8 of header P17 (Figure 12). Note that the MSP-FET will not power the EB if pin 9-10 of header P17 ("LCL") is short circuited.

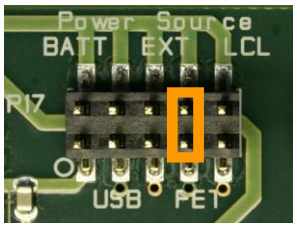

Figure 12 – P17 jumper settings to power EB using a MSP-FET

6.4 LCD

The SmartRF TrxEB comes with a 128x64 pixels display from Electronic Assembly (DOGM128E-6) [7]. The LCD display is available to the onboard MSP430 via an SPI interface, enabling software development of user interfaces and demo use. The LCD display shares SPI interface with the serial flash device (section 6.7).

The recommended operating condition for the LCD display is a supply voltage between 3.0 V and 3.3 V. The min (max) operating temperature is -20 (+70) ˚C.

6.5 Accelerometer

The SmartRF TrxEB is equipped with a digital accelerometer from VTI Technologies (CMA3000-D01) [8]. The accelerometer is available to the onboard MSP430 MCU via an SPI interface and has a dedicated interrupt line to the MCU. The onboard accelerometer is suitable for application development, prototyping and demo use. See sections 8.2.2 and 9.2.2 for details on accelerometer axis orientation for EB revision 1.3.0 and ≥1.5.0, respectively.

The recommended operating condition for the accelerometer is a supply voltage between 1.7 V and 3.6 V. The min (max) operating temperature is -40 (+85) ˚C.

6.6 Ambient Light Sensor

The SmartRF TrxEB has an analog SFH 5711 ambient light sensor from Osram [9] that is available to the onboard MSP430, enabling quick application development for demo use and prototyping. The light sensor is placed outside the bottom right corner of the LCD display.

The recommended operating condition for the ambient light sensor is a supply voltage between 2.3 V and 5.5 V. The min (max) operating temperature is -40 (+85) ˚C.

6.7 Serial Flash

SmartRF TrxEB has a M25PE20 flash device – a paged 256 KB serial flash memory from Micron [10]. The device gives the MSP430 access to extra flash, enabling over-the-air upgrades and more. The serial device shares SPI bus with the LCD display (section 6.4).

The recommended operating condition for the serial flash device is a supply voltage between 2.7 V and 3.6 V. The min (max) operating temperature is -40 (+85) ˚C.

6.8 Buttons

There are 7 buttons on the SmartRF TrxEB. Status of BTN_LEFT, BTN_RIGHT, BTN_UP, BTN_DOWN and BTN_SELECT can be read by the onboard MSP430. These buttons are intended for user interfacing and development of demo applications.

The RESET MCU button resets the MSP430 MCU by pulling its reset line low (MCU_RESET_N). The RESET USB button similarly resets the USB controller (pulling USB_RESET_N low). Note that the standard firmware on the USB controller will reset the EM and MSP430 during startup, so pushing the RESET USB button also resets the controller on the EM board and the MSP430.

6.9 LEDs

6.9.1 General Purpose LEDs

The four LEDs D3, D4, D5, D7 can be controlled from the onboard MSP430 and are suitable for demo use and debugging. The LEDs are active low.

6.9.2 USB LED

LED D6 (USB LED) is controlled by the USB controller and is used to indicate the status of the EB. The USB LED has several states, listed in Table 6.

USB LED state	Description
OFF	Power is turned off, the USB controller is in Disabled Mode or the software on the USB controller is corrupt.
ON	**SmartRF Mode:** The standard firmware is running and a RF-IC has been detected. **UART Mode:** The standard firmware is running. The USB LED is quickly toggled OFF/ON when UART traffic. This is typically seen as slight variations in emitted intensity.
BLINKING (100 ms ON – 900 ms OFF)	**SmartRF Mode:** No RF-IC is detected.
BLINKING (1 Hz)	The USB MCU has entered the boot recovery mode. See chapter 11 for further details.
BLINKING (10 Hz)	The bootloader on the USB MCU could not find a valid application to boot. Basic USB services are available and both SmartRF Studio and SmartRF Flash Programmer can be used to program an application to the USB controller's flash. See chapter 11 for further details.

Table 6 – USB LED state descriptions

6.10 EM Connectors

The EM connectors (TFM-110-02-S-D-A from Samtec), shown in Figure 13, are used for connecting an EM board to the SmartRF TrxEB. The connectors RF1 and RF2 are the main interface and are designed to avoid incorrect mounting of the EM board.

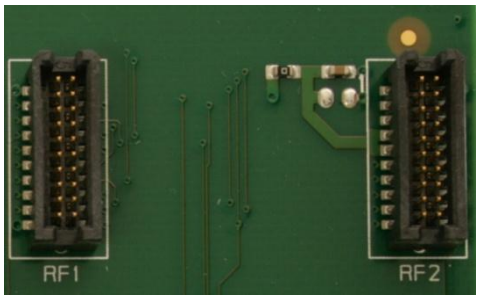

Figure 13 – SmartRF TrxEB EM connectors RF1 and RF2

The signals from the EM are primarily connected to the MSP430 on the TrxEB. Some of the signals are also connected to the USB controller in order to allow control of the RF device from the PC with SmartRF Studio. The figure below (Figure 14) illustrates how the signals are connected to the MSP430 and which serial peripheral modules on the MSP430 that can potentially be used for communication with the EM.

The main serial interface to the EM (transceiver) is over SPI using USCIB0. To support some of the network processors and other EMs with alternative pin-out, some of the signals from the EM are connected to **both** USCIB1 (for SPI) and USCIA0 (for UART). If the serial peripheral modules are not needed, the same pins on the MSP430 can be used as general purpose IOs.

Also note that most of the general purpose control signals from the EM (i.e. the signals not used for serial communication) are connected to interrupt capable pins on the MSP430 (port 1 and 2).

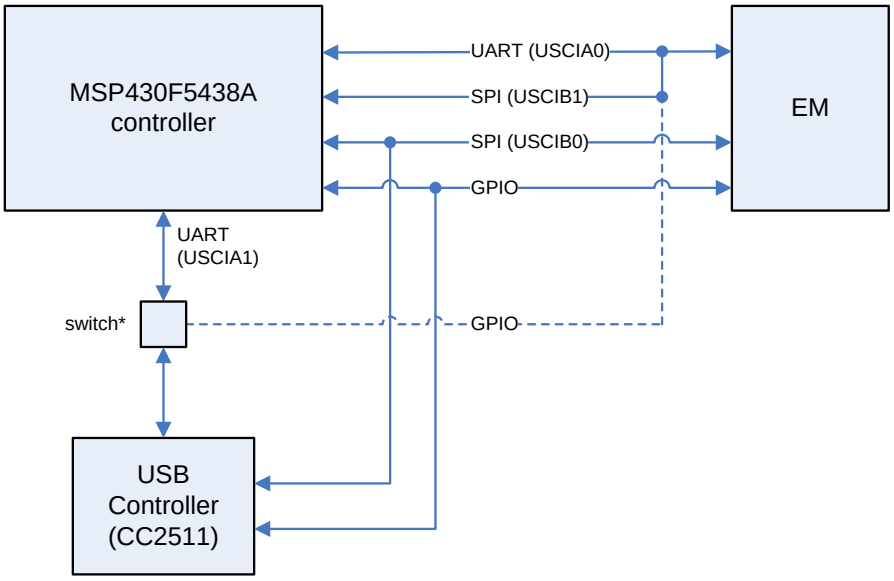

Figure 14 – EM interface

(*) Note that the switch is only present on rev 1.7.0 and newer of the TrxEB (see 10.2.1)

The pin-out of the EM connectors is given in Table 7 and Table 8 below. The signals from the EM connectors are all accessible from either the EM I/O breakout headers (see section 6.11.1) and/or the MSP430 I/O breakout (section 6.11.2).

EM pin	Signal name	Description	Breakout header	MSP430
RF1.1	GND	Ground		
RF1.2	NC	Not connected		
RF1.3	P1_4 / RF_SPI1_CS_N	GPIO signal to EM board / Alt. SPI	P7.5	P1.4
RF1.4	P1_1	GPIO signal to EM board	P7.2	P1.1
RF1.5	P8_2	GPIO signal to EM board	P7.13	P8.2
RF1.6	P1_5	GPIO signal to EM board	P7.6	P1.5
RF1.7	RF_UART_TXD / RF_SPI1_MISO	2-line UART to EM board / Alt. SPI	P7.9	P3.4 / P5.4
RF1.8	(breakout)	GPIO signal	P25A.1	
RF1.9	RF_UART_RXD / RF_SPI1_MOSI	2-line UART to EM board / Alt. SPI	P7.7	P3.5 / P3.7
RF1.10	P1_7	GPIO signal to EM board	P7.8	P1.7
RF1.11	P8_3	GPIO signal to EM board	P7.15	P8.3
RF1.12	P1_3	GPIO signal to EM board	P7.4	P1.3
RF1.13	(breakout)	GPIO signal	P25A.2	
RF1.14	RF_SPI0_CS_N	EM SPI Chip Select	P7.14	P3.0
RF1.15	P8_4	GPIO signal to EM board	P7.17	P8.4
RF1.16	RF_SPI0_SCLK	EM SPI Clock	P7.12	P3.3
RF1.17	P8_5	GPIO signal to EM board	P7.19	P8.5
RF1.18	RF_SPI0_MOSI	EM SPI MOSI	P7.16	P3.1
RF1.19	GND	Ground	P7.20	
RF1.20	RF_SPI0_MISO	EM_SPI_MISO	P7.18	P3.2

Table 7 – EM connector RF1 pin-out

EM pin	Signal name	Description	Breakout header	MSP430
RF2.1	NC	Not connected		
RF2.2	GND	Ground		
RF2.3	NC	Not connected		
RF2.4	NC	Not connected		
RF2.5	NC	Not connected		
RF2.6	(breakout)	GPIO signal	P25C.1	
RF2.7	RF_PWR	EM power		
RF2.8	(breakout)	GPIO signal	P25C.2	
RF2.9	RF_PWR	EM power		
RF2.10	(breakout)	GPIO signal	P25D.1	
RF2.11	(breakout)	GPIO signal	P25B.1	
RF2.12	(breakout)	GPIO signal	P25D.2	
RF2.13	(breakout)	GPIO signal	P25B.2	
RF2.14	(breakout)	GPIO signal	P25E.1	
RF2.15	RF_RESET_N	Signal used to reset EM board	P7.10	P8.0
RF2.16	NC	Not connected		
RF2.17	P8_1	GPIO signal to EM board	P7.11	P8.1
RF2.18	P1_2 / RF_SPI1_SCLK	GPIO signal to EM board / Alt. SPI	P7.3	P1.2 / P5.5
RF2.19	P1_0	GPIO signal to EM board	P7.1	P1.0
RF2.20	GND (NC on rev < 1.7.0)	Ground		

Table 8 – EM connector RF2 pin-out

6.11 Breakout Headers and Jumpers

Header P7 and P25A-E give access to main EM connector pins, while P11, P14, P16 and P18-P24 give access to the MSP430 I/O (section 6.11.2). Some signals can be accessed from both the EM I/O breakout headers and the MSP430 I/O breakout as indicated by Figure 15.

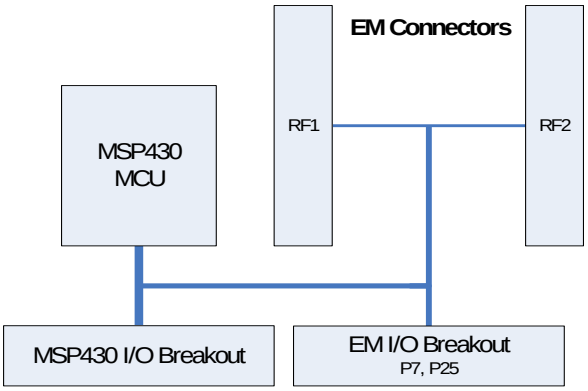

Figure 15 – SmartRF TrxEB I/O breakout overview

6.11.1 EM I/O breakout headers

The EM I/O breakout headers on SmartRF TrxEB consist of header P7 and I/O connector P25. P25 is made out of five 2-pin connectors (P25A-E). The layout of these connectors is shown in Figure 16. Table 7 and Table 8 in section 6.10 shows how the EM I/O connector headers are mapped to EM connector RF1 and RF2, respectively.

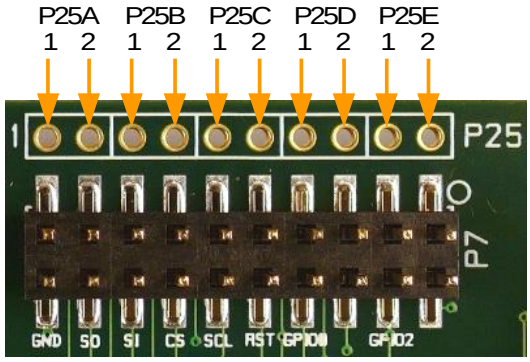

Figure 16 – I/O connector P25A-E PCB layout

6.11.2 MSP430 I/O breakout

MSP430 ports 1-10 are on SmartRF TrxEB available through the MSP430 I/O breakout shown in Figure 17. Table 9 lists I/O breakout for ports 1-5, while Table 10 covers ports 6-10. Both tables indicate if the given MSP430 pin is connected to an EM connector pin. For additional info on the MSP430 pin-out on SmartRF TrxEB, please refer to section 8.4.

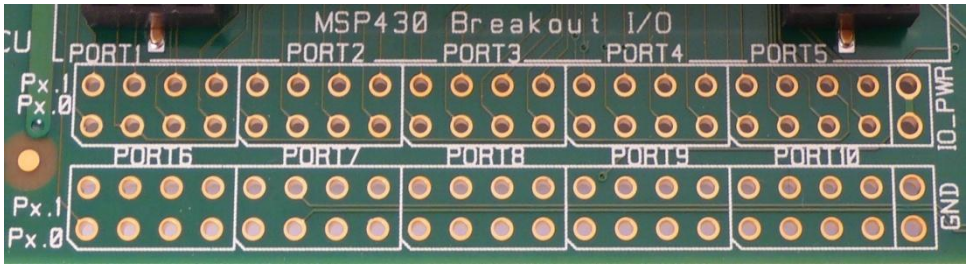

Figure 17 – MSP430 I/O breakout on SmartRF TrxEB

MSP430	Signal Name	Description	EM pin
P1.0	P1_0	Unused GPIO	RF2.19
P1.1	P1_1	GPIO signal to EM board	RF1.4
P1.2	P1_2 / RF_SPI1_SCLK	Alternative EM SPI Clock	RF2.18
P1.3	P1_3	GPIO signal to EM board	RF1.12
P1.4	P1_4 / RF_SPI1_CS_N	Alternative EM SPI Chip Select	RF1.3
P1.5	P1_5	GPIO signal to EM board	RF1.6
P1.6	P1_6	Unused GPIO	
P1.7	P1_7	GPIO signal to EM board	RF1.10
P2.0	ACC_INT	Accelerometer interrupt line	
P2.1	BTN_LEFT	Left button input line	
P2.2	BTN_RIGHT	Right button input line	
P2.3	BTN_SELECT	Select button input line	
P2.4	BTN_UP	Up button input line	
P2.5	BTN_DOWN	Down button input line	
P2.6	P2_6	Unused GPIO	
P2.7	USB_UART_CTS	CTS line to USB MCU	
P3.0	RF_SPI0_CS_N	EM SPI Chip Select	RF1.14
P3.1	RF_SPI0_MOSI	EM SPI MOSI	RF1.18
P3.2	RF_SPI0_MISO	EM SPI MISO	RF1.20
P3.3	RF_SPI0_SCLK	EM SPI Clock	RF1.16
P3.4	RF_UART_TXD / RF_SPI1_MISO	2-line UART to EM board	RF1.7
P3.5	RF_UART_RXD / RF_SPI1_MOSI	2-line UART to EM board	RF1.9
P3.6	LCD_BL	LCD backlight module enable line [3]	
P3.7	RF_UART_RXD / RF_SPI1_MOSI	Alternative EM SPI MOSI	RF1.9
P4.0	LED_1	General purpose LED 1 line	
P4.1	LED_2	General purpose LED 2 line	
P4.2	LED_3	General purpose LED 3 line	
P4.3	LED_4	General purpose LED 4 line	
P4.4	USB_UART_RTS	RTS line to USB MCU	
P4.5	P4_5	Unused GPIO	
P4.6	P4_6	Unused GPIO	
P4.7	P4_7	Unused GPIO	
P5.0	P5_0	GPIO or VREF+	
P5.1	P5_1	GPIO or VREF-	
P5.2	P5_2 / XT2IN	Unused GPIO / External crystal oscillator line	
P5.3	P5_3 / XT2OUT	Unused GPIO / External crystal oscillator line	
P5.4	RF_UART_TXD / RF_SPI1_MISO	Alternative EM SPI MISO	RF1.7
P5.5	P1_2 / RF_SPI1_SCLK	Alternative EM SPI Clock	RF2.18
P5.6	USB_UART_TXD	TXD line to USB MCU	
P5.7	USB_UART_RXD	RXD line to USB MCU	

Table 9 – MSP430 Port 1-5 pin-out

[3] LCD backlight module is not included. Additional components needed to use backlight module.

MSP430	Signal Name	Description	EM pin
P6.0	ACC_PWR	Accelerometer power, enable high	
P6.1	ALS_PWR	Ambient light sensor power, enable high	
P6.2	ALS_OUT	Ambient light sensor output line	
P6.3	P6_3	Unused GPIO	
P6.4	P6_4	Unused GPIO	
P6.5	P6_5	Unused GPIO	
P6.6	P6_6	Unused GPIO	
P6.7	P6_7	Unused GPIO	
P7.0	P7_0 / XIN	External crystal oscillator line	
P7.1	P7_1 / XOUT	External crystal oscillator line	
P7.2	FLASH_RESET_N	Serial flash reset line, active low	
P7.3	LCD_RESET_N	LCD reset line, active low	
P7.4	P7_4	Unused GPIO	
P7.5	P7_5	Unused GPIO	
P7.6	FLASH_PWR	Serial flash power, enable high	
P7.7	LCD_PWR	LCD power, enable high	
P8.0	RF_RESET_N	Signal used to reset EM board	RF2.15
P8.1	P8_1	GPIO signal to EM board	RF2.17
P8.2	P8_2	GPIO signal to EM board	RF1.5
P8.3	P8_3	GPIO signal to EM board	RF1.11
P8.4	P8_4	GPIO signal to EM board	RF1.15
P8.5	P8_5	GPIO signal to EM board	RF1.17
P8.6	FLASH_CS_N	SPI Chip Select for serial flash, active low	
P8.7	ACC_CS_N	SPI Chip Select for accelerometer, active low	
P9.0	IO_SPI1_SCLK	SPI Clock (interface used by accelerometer)	
P9.1	IO_SPI0_MOSI	SPI MOSI (interface shared by LCD, serial flash)	
P9.2	IO_SPI0_MISO	SPI MISO (interface shared by LCD, serial flash)	
P9.3	IO_SPI0_SCLK	SPI SCLK (interface shared by LCD, serial flash)	
P9.4	IO_SPI1_MOSI	SPI MOSI (interface used by accelerometer)	
P9.5	IO_SPI1_MISO	SPI MISO (interface used by accelerometer)	
P9.6	LCD_CS_N	SPI Chip Select for LCD, active low	
P9.7	LCD_MODE	LCD mode select signal [7]	
P10.0	P10_0	Unused GPIO	
P10.1	P10_1	Unused GPIO	
P10.2	P10_2	Unused GPIO	
P10.3	P10_3	Unused GPIO	
P10.4	P10_4	Unused GPIO	
P10.5	P10_5	Unused GPIO	
P10.6	P10_6	Unused GPIO	
P10.7	P10_7	Unused GPIO	

Table 10 – MSP430 Port 6-10 pin-out

6.12 Current Measurement Jumpers

SmartRF TrxEB has three current measurement jumpers, MCU_PWR, IO_PWR and RF_PWR, as shown in Figure 18. By removing one of the jumpers, an ammeter can easily be connected to the board and perform current consumption measurements on the different segments of the EB. Similarly, a separate, regulated power supply for the EM can be connected. Table 11 shows an overview of what onboard components are connected to which power segment.

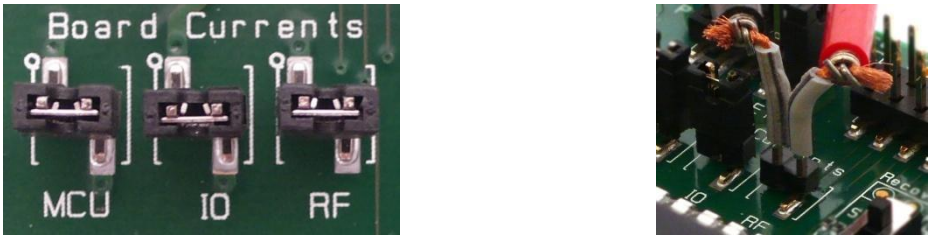

Figure 18 – Current measurement jumpers

If the EM is powered by a different source than the rest of the board, the same voltage should be used on the EM as on the EB. The digital signals between the EB and the EM are not isolated from each other, and different voltage levels can cause excessive current consumption or erroneous interaction between the EB and the EM.

NOTE: On SmartRF TrxEB revision 1.3.0, the “IO” and “RF” labels in the silk print are switched around. For all revisions, IO and RF current should be measured on the jumpers indicated by the silk print in Figure 18. See chapter 8 for details about EB revision 1.3.0.

Figure 19 – Current measurement setup

Component	Default power	Alternative power
Evaluation Module	RF_PWR	NA
MSP430 MCU	MCU_PWR	NA
USB MCU	IO_PWR	NA
General Purpose LEDs	IO_PWR	NA
USB LED	IO_PWR	NA
Accelerometer	MCU_PWR (MSP430 P6.0)	NA
Ambient Light Sensor	MCU_PWR (MSP430 P6.1)	NA
SPI Flash	MCU_PWR (MSP430 P7.6)	IO_PWR (swap R17/R18)
LCD	MCU_PWR (MSP430 P7.7)	IO_PWR (swap R29/R30)

Table 11 – Component/Power segment overview

7 Connecting an external MCU to SmartRF TrxEB

You can easily connect an external MCU to a SmartRF TrxEB and use it to control the EM board mounted on the TrxEB. This chapter gives a quick overview over the signals that must be connected to enable your external MCU to control the EM.

7.1 Disable MCUs onboard SmartRF TrxEB

To avoid any signal conflicts between the MCUs onboard the SmartRF TrxEB (MSP430 and USB MCU) and the external MCU, both onboard MCUs should be disabled.

Disable the USB MCU by setting mode selection switch S2 to “Disable” position (Figure 20a).

To hold the onboard MSP430 MCU in reset state, short circuit pins 1-2 on header P4 as shown in Figure 20b. An alternative, more power efficient option is to program the onboard MSP430 with you own, custom software which configures the MSP430 pins to minimize current consumption and makes the MSP430 enter a low-power mode [5].

a) Disable USB MCU ***b) Hold MSP430 in reset***

Figure 20 – Switch and jumper settings to disable both SmartRF TrxEB MCUs

7.2 Select power source

When connecting an external MCU board to the SmartRF TrxEB, there are typically two options for powering the boards, both consisting of sharing a power source. The first is to let the external MCU board draw power from the SmartRF TrxEB; the second is to power the SmartRF TrxEB from an external power source. It is in both cases important that the voltage levels on shared signals are the same.

7.2.1 Power external MCU from SmartRF TrxEB

Power the external MCU board by connecting it to IO_PWR (P9) and GND (P6) on SmartRF TrxEB, shown in Figure 21.

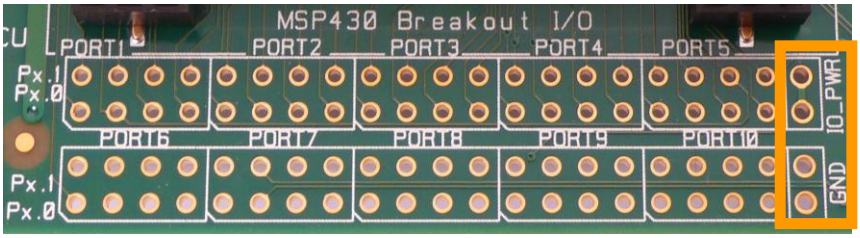

Figure 21 – Power external MCU board by connecting it to IO_PWR and GND

7.2.2 Power SmartRF TrxEB from external power source

Connect the power from the external power source to the external power source connector on SmartRF TrxEB and set the power source selection jumpers accordingly. Please see section 6.3.3 for a detailed description on how to power the SmartRF TrxEB from an external power source.

NOTE: When powering the SmartRF TrxEB from an external power source, the TrxEB main power switch must be in on position for the EB to be powered up.

7.3 Connect signals

7.3.1 Common signals

Table 12 shows the common signals needed to communicate with transceivers on a mounted EM board. Figure 22 shows where the signals listed Table 12 and Table 13 can be found on the P7 EM I/O breakout header on SmartRF TrxEB.

TrxEB Signal Name	TrxEB breakout pin	Description
RF_RESET_N	P7.10	Signal used to reset EM board
RF_SPI0_SCLK	P7.12	EM SPI interface clock signal
RF_SPI0_CS_N	P7.14	EM SPI interface chip select signal, active low
RF_SPI0_MOSI	P7.16	EM SPI interface MOSI signal
RF_SPI0_MISO	P7.18	EM SPI interface MISO signal
GND	P7.20	Common ground for EB and external MCU board

Table 12 – Strapping overview to connect common signals to an external MCU

7.3.2 Transceiver GPIO signals

The CC1120 GPIO pins available through the EM connectors on the SmartRF TrxEB are listed in Table 13. Figure 22 shows where the signals listed Table 12 and Table 13 can be found on the P7 EM I/O breakout header on SmartRF TrxEB. On SmartRF TrxEB rev. 1.7.0, silk print indicates where the most important EM I/O signals on header P7 are located.

NOTE: Transceiver EM boards from Texas Instruments share much of the same GPIO routing to the EM connectors. However, the number of GPIO signals available depends on the transceiver. Please refer to the schematics of your EM board for further details on the available GPIO.

TrxEB Signal Name	TrxEB Breakout Pin	Description
P1_7	P7.8	Transceiver GPIO0
RF_SPI0_MISO	P7.18	Transceiver GPIO1 (Shared with EM SPI MISO)
P1_3	P7.4	Transceiver GPIO2
P1_2 / RF_SPI1_SCLK	P7.3	Transceiver GPIO3

Table 13 – Strapping overview to strap CC1120 GPIO to an external MCU

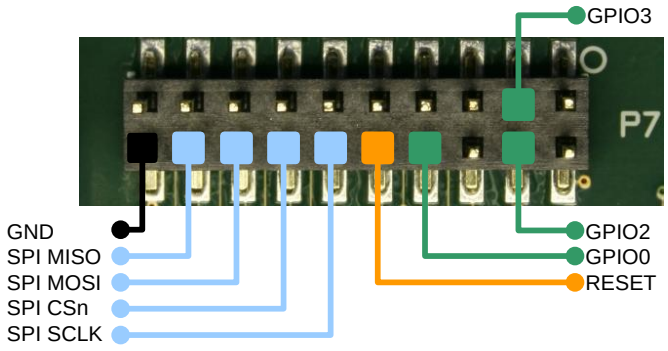

Figure 22 – P7 with strapping to connect external MCU to SmartRF TrxEB

8 SmartRF TrxEB rev. 1.3.0

8.1 Board Overview

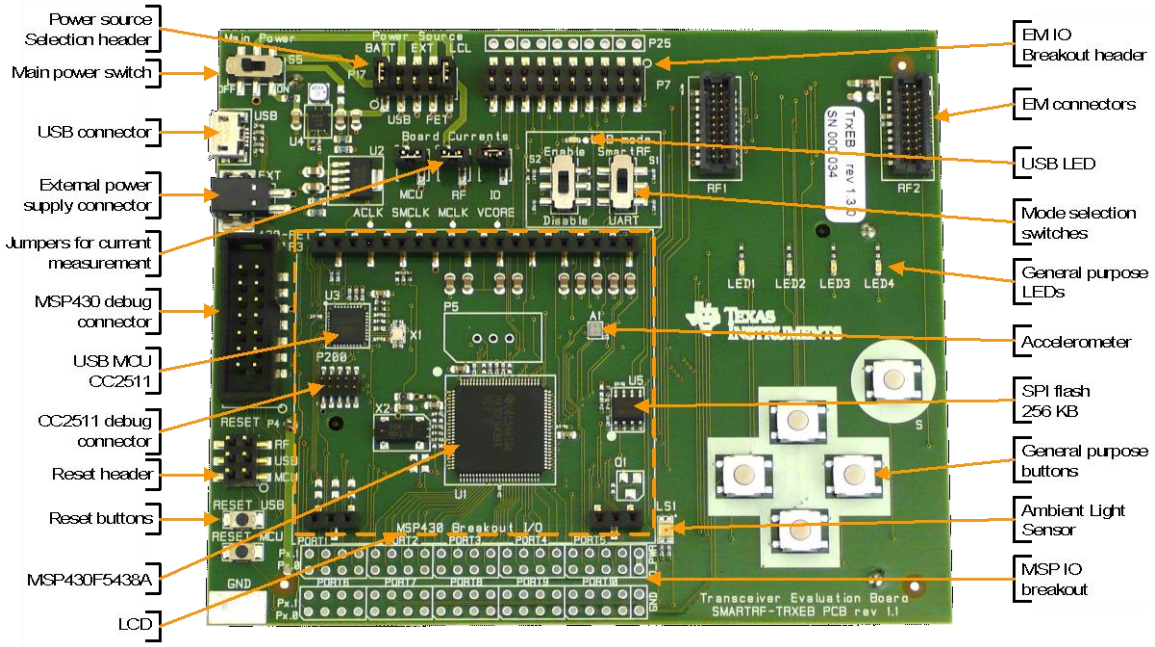

Figure 23 – SmartRF TrxEB revision 1.3.0 overview

8.2 Software Considerations

8.2.1 Virtual COM port over USB

The onboard MSP430 MCU can communicate with a PC over a virtual serial port when the USB MCU is in UART Mode (described in section 6.1.2). When developing MSP430 code to communicate via the USB MCU, keep in mind that the standard USB MCU firmware only supports a two-line UART interface (see section 6.1.2 for further details).

8.2.2 Accelerometer

The onboard MSP430 MCU has access to accelerometer A1. On SmartRF TrxEB revision 1.3.0, the accelerometer axes are as shown in Figure 24.

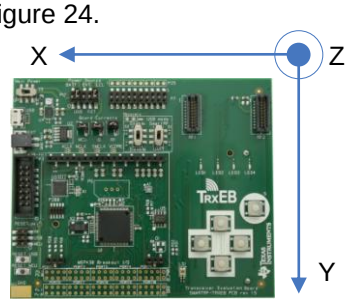

Figure 24 – Accelerometer axes on SmartRF TrxEB rev. 1.3.0

8.3 USB MCU pin-out

Table 14 shows how the USB MCU's pins are connected to the different functionalities on EB revision 1.3.0.

CC2511	Signal name	Description	EM pin
P0.0	MCU_RESET_N	Signal used to reset MSP430 MCU	
P0.1	RF_RESET_N	Signal used to reset EM board	RF2.15
P0.2	RF_SPI0_CS_N	EM SPI Chip Select	RF1.14
P0.3	RF_SPI0_SCLK	EM SPI Clock	RF1.16
P0.4	RF_SPI0_MOSI	EM SPI MOSI	RF1.18
P0.5	RF_SPI0_MISO	EM SPI MISO	RF1.20
P1.0	USB_PULLUP	Enable USB Interface pull-up resistor	
P1.1	P1_3	CC Debug Clock	RF1.12
P1.2	USB_UART_RTS	MSP430 UART (CC2511 CTS)	
P1.3	USB_UART_CTS	MSP430 UART (CC2511 RTS)	
P1.4	USB_UART_TXD	MSP430 UART (CC2511 RXD)	
P1.5	USB_UART_RXD	MSP430 UART (CC2511 TXD)	
P1.6	USB_ENABLE	Switch S2 input	
P1.7	P1_7	CC Debug Data	RF1.10
P2.0	RF_UART_RXD / RF_SPI1_MOSI	GPIO signal to EM board	RF1.9
P2.1	USB_DBG_DD	CC2511 CC Debug Interface Data	
P2.2	USB_DBG_DC	CC2511 CC Debug Interface Clock	
P2.3	USB_MODE	Switch S1 input	
P2.4	USB_LED	USB LED and Forced Recovery signal	

Table 14 – USB MCU pin-out on SmartRF TrxEB rev. 1.3.0

8.4 MSP430 MCU pin-out

For details on the pin-out for MSP430 port 1-10, please refer to Table 9 and Table 10 in section 6.11.2. Table 15 below shows the MSP430 pin-out not listed in section 6.11.2.

MSP430	Signal Name	Description
P11.0	ACLK	MSP430 ACLK output to test point TP5
P11.1	MCLK	MSP430 MCLK output to test point TP6
P11.2	SMCLK	MSP430 SMCLK output to test point TP7
VCORE	VCORE	MSP430 VCORE output to test point TP8
PJ.0	TDO	JTAG Test Data Out
PJ.1	TDI	JTAG Test Data In
PJ.2	TMS	JTAG Test Mode Select
PJ.3	TCK	JTAG Test Clock

Table 15 – MSP430 miscellaneous signal pin-out

9 SmartRF TrxEB rev. 1.5.0

9.1 Board Overview

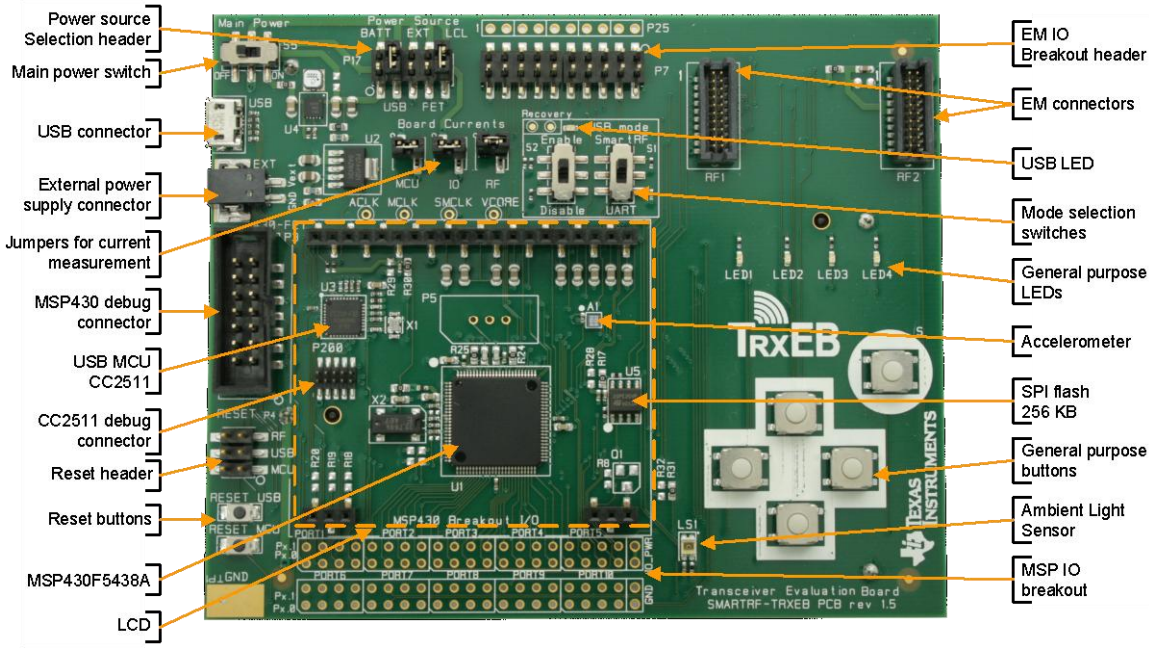

Figure 25 – SmartRF TrxEB revision 1.5.0 overview

9.2 Changes from rev. 1.3.0

9.2.1 RC filter on USB MCU reset line

The pull-up resistor R22 on the USB MCU's reset line (USB_RESET_N) has been removed. It is replaced by a RC filter (R22 and C50) to remove ripple during reset line state transitions. See the schematics for EB revision 1.5.0 for more details.

9.2.2 Accelerometer

The onboard accelerometer (A1) has been rotated 180 degrees compared to EB revision 1.3.0. The accelerometer axes are given in Figure 26. Silk print has been added on the EB backside indicating the accelerometer axes.

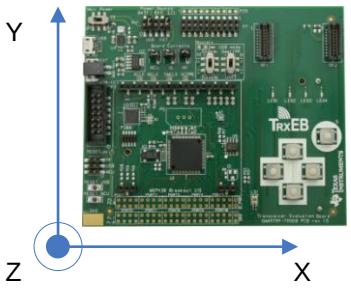

Figure 26 – Accelerometer axes on SmartRF TrxEB rev. ≥1.5.0

9.2.3 Silk print

Silk print text “IO” and “RF” near board current measurement jumpers P10 and P15 were on EB revision 1.3.0 placed next to the wrong jumper. This has been corrected as seen in Figure 27.

Silk print text “MCLK” and “SMCLK” near test points TP6 and TP7 were on EB revision 1.3.0 swapped, and placed next to the wrong test point. This has been corrected as seen in Figure 27.

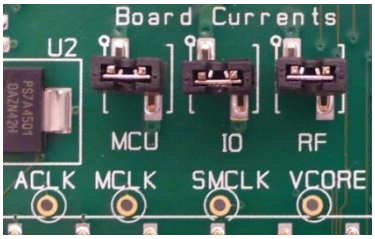

Figure 27 – Correct silk print for MCLK and SMCLK test points

Silk print has been added to the backside for EB revision 1.5.0. The silk print indicates the orientation of the accelerometer axes (see section 9.2.1) and power source jumper configurations (see section 6.3).

9.3 USB MCU pin-out

Same as revision 1.3.0, see section 8.3.

9.4 MSP430 MCU pin-out

Same as revision 1.3.0, see section 8.4.

10 SmartRF TrxEB rev. 1.7.0

10.1 Board Overview

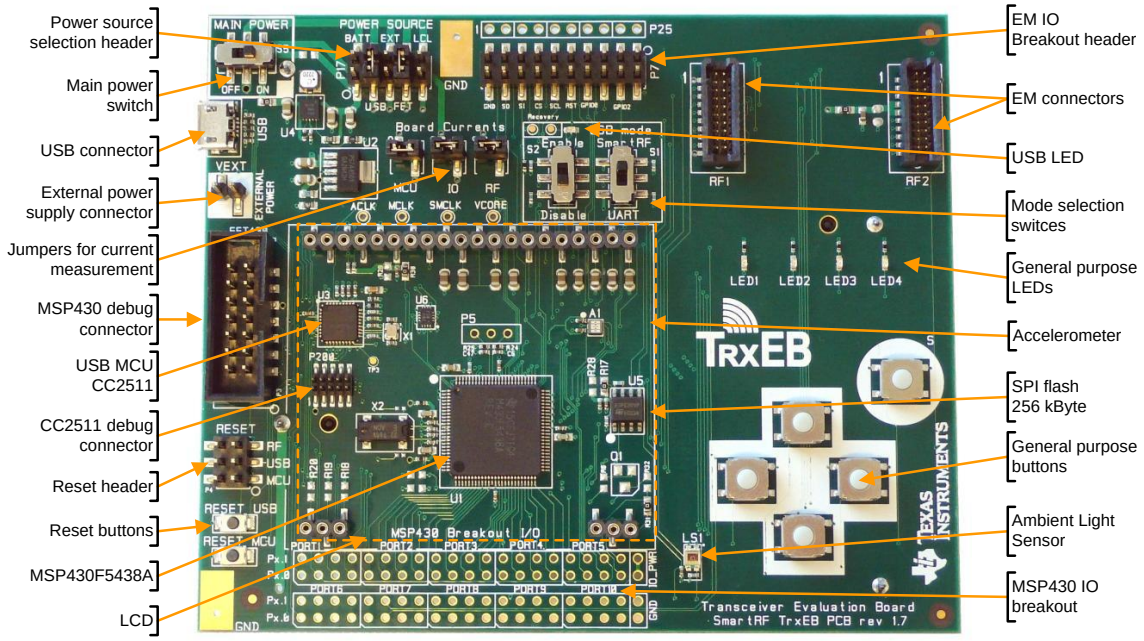

Figure 28 – SmartRF TrxEB revision 1.7.0 overview

10.2 Changes from rev. 1.5.0

10.2.1 Switch added to enable combo EM support

In order to support all combo EMs (e.g. CC1101-CC1190), a switch (TS3A44159) has been added in EB revision 1.7.0. The switch is placed between the four UART lines between the USB MCU and the MSP430 as shown in Figure 29. Hardware switch S1 controls the switch as given in Table 16.

With the USB MCU in UART Mode (see section 6.1.2), the switch connects COMx lines to NCx lines resulting in the same behavior as for older revisions of SmartRF TrxEB. In SmartRF Mode (see section 6.1.1), COMx lines are connected to NOx giving the USB MCU extra access to the EM interface, enabling support of combo EMs in SmartRF Studio.

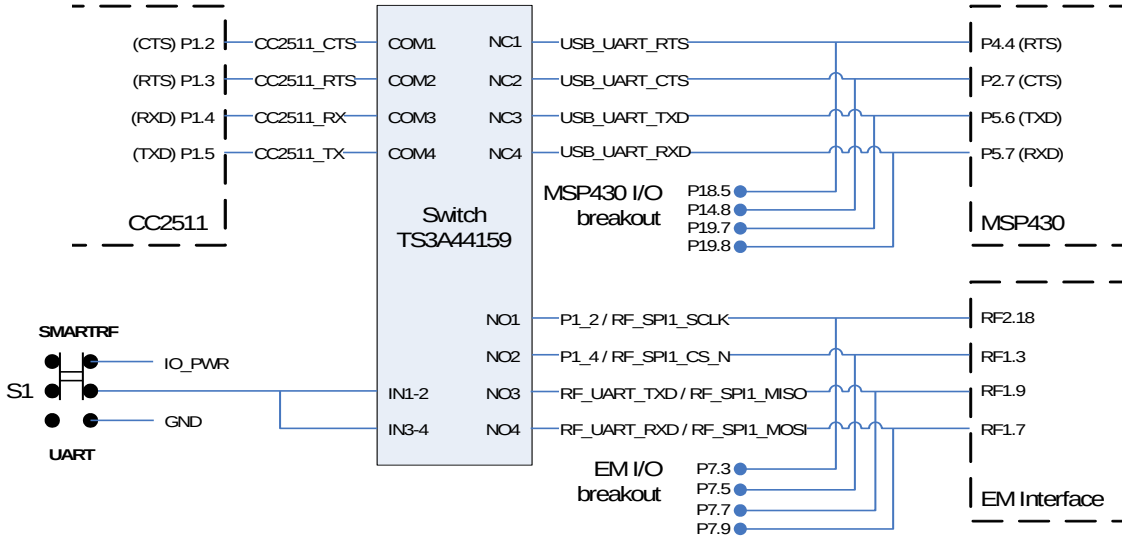

Figure 29 – Signal overview for switch TS3A44159 added for SmartRF TrxEB rev. 1.7.0

S1 position	Switch TS3A44159 connection
UART	COMx ↔ NCx
SMARTRF	COMx ↔ NOx

Table 16 – S1 control over TS3A44159 switch for SmartRF TrxEB rev. 1.7.0

10.2.2 Connector type for external power sources

On SmartRF TrxEB rev. 1.7.0, the external power source connector has been switched to a two-pin header (P1). See section 6.3.3.2 for more details on how to power SmartRF TrxEB rev. 1.7.0 using an external power supply.

10.2.3 Connector type for LCD

SmartRF TrxEB rev. 1.7.0 comes with a different LCD connector type than previous revisions to ensure proper connection to the LCD.

WARNING! The LCD connector on SmartRF TrxEB rev. 1.7.0 is very tight. Be extremely cautious when removing the LCD display to avoid the LCD display from breaking.

10.2.4 Ground pad between P17 and P7

A new ground pad has been added between the power source header (P17) and the EM I/O breakout header (P7) to ease connection of probes with these headers. The new ground pad is shown in Figure 30.

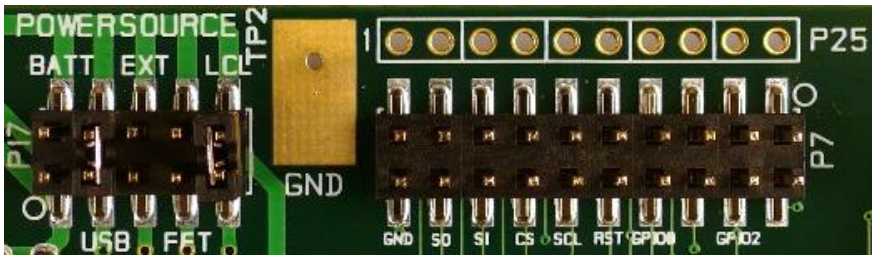

Figure 30 – Added ground pad on SmartRF TrxEB rev. 1.7.0.

10.2.5 Silk print

There has been made several minor additions to the silk print on SmartRF TrxEB 1.7.0, e.g. EM I/O breakout pins on header P7 are now marked (see Figure 30).

10.3 USB MCU pin-out

Table 17 shows how the USB MCU's pins are connected to the different functionalities on EB revision 1.7.0. Changes from previous EB revision are in bold.

CC2511	Signal name	Description	EM pin
P0.0	MCU_RESET_N	Signal used to reset MSP430 MCU	
P0.1	RF_RESET_N	Signal used to reset EM board	RF2.15
P0.2	RF_SPI0_CS_N	EM SPI Chip Select	RF1.14
P0.3	RF_SPI0_SCLK	EM SPI Clock	RF1.16
P0.4	RF_SPI0_MOSI	EM SPI MOSI (Master Out, Slave In)	RF1.18
P0.5	RF_SPI0_MISO	EM SPI MISO (Master in, slave out)	RF1.20
P1.0	USB_PULLUP	Enable USB Interface pull-up resistor	
P1.1	P1_3	CC Debug Clock	RF1.12
P1.2	**CC2511_CTS**	MSP430 UART / **GPIO connected to EM board**	**RF2.18** [4]
P1.3	**CC2511_RTS**	MSP430 UART / **GPIO connected to EM board**	**RF1.3** 4
P1.4	**CC2511_RX**	MSP430 UART / **GPIO connected to EM board**	**RF1.9** 4
P1.5	**CC2511_TX**	MSP430 UART / **GPIO connected to EM board**	**RF1.7** 4
P1.6	USB_ENABLE	Switch S2 input	
P1.7	P1_7	CC Debug Data	RF1.10
P2.0	**TP3**	**GPIO connected to test point TP3**	**NC**
P2.1	USB_DBG_DD	CC2511 CC Debug Interface Data	
P2.2	USB_DBG_DC	CC2511 CC Debug Interface Clock	
P2.3	USB_MODE	Switch S1 input	
P2.4	USB_LED	USB LED and Forced Recovery signal	

Table 17 – USB MCU pin-out on SmartRF TrxEB rev. 1.7.0

10.4 MSP430 MCU pin-out

Same as revision 1.3.0, see section 8.4.

[4] USB MCU pin is GPIO connected to the EM board in SmartRF Mode (section 6.1.1).

11 Updating the firmware

NOTE: This chapter only describes how to program the firmware on the USB controller on the TrxEB. To program the MSP430, use the MSP-FET430UIF tool and connect it to the FET430 connector on the EB. Programming can be done using IAR EW430, CCS or SmartRF Flash Programmer.

Updating the EB firmware is done automatically by SmartRF Studio and SmartRF Flash Programmer if an old or incompatible firmware version is found on the USB MCU. SmartRF Flash Programmer also allows manual programming of the EB firmware. Please refer to the respective user's guides for detailed instructions. A simple step-by-step guide for updating the USB MCU firmware using SmartRF Studio is provided below.

1. Turn off the evaluation board (EB).
2. Disconnect any connected evaluation module (EM).
3. Plug in the USB cable and turn the power switch on.
4. The SmartRF TrxEB device should appear in the SmartRF Studio main window as seen in Figure 31a.
5. Double click the TrxEB device. SmartRF Studio will prompt if you wish to update the EB firmware (Figure 31b).
6. Confirm that you wish to update the EB firmware and wait for the upgrade process to complete (Figure 31c). This may take several seconds.
7. The EB will re-appear as a connected device in the SmartRF Studio window when the update is completed.

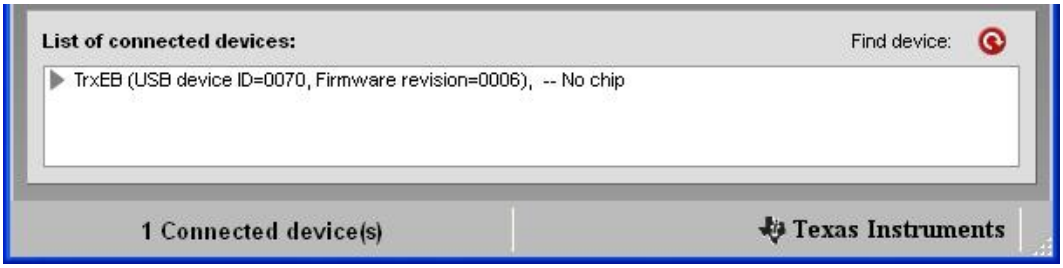

a)

b)

c)

Figure 31 – Firmware upgrade steps in SmartRF Studio

11.1 Forced Boot Recovery Mode

If the firmware update fails and the evaluation board appears to be dead, there is a way to force the board to only run the bootloader and stop all further execution. No attempts will be made to start the EB firmware.

1. Turn the EB power off.
2. Rev. 1.3.0: Ground the USB LED test point shown in Figure 32a.
   Rev. ≥1.5.0: Ground the USB LED test point with the GND test point in Figure 32b.
3. While doing as explained in the second step, turn the EB power on.

When the board is powered up, the bootloader will not attempt to start the firmware and it will remain in control of the board. LED D6 (USB LED) will be blinking with a 1 second interval, indicating that the bootloader is running. You can use the USB LED state as an indicator to whether you have a working bootloader or not.

When the bootloader is running, the only functionality that is offered from SmartRF Studio and SmartRF Flash Programmer is to load a new version of the standard firmware.

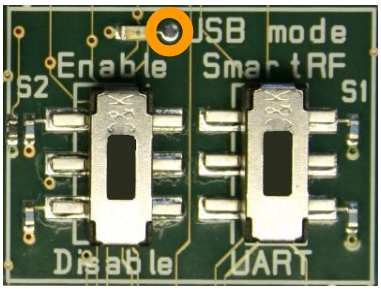

a) Revision 1.3.0

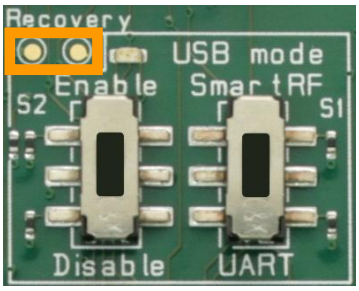

b) Revision ≥1.5.0

Figure 32 – Enter forced boot recovery mode

11.2 Board Resurrection

If the forced boot recovery method above also fails, the board might be faulty or the flash on the CC2511 device has been inadvertently deleted. If the latter has happened, you can try to reprogram the boot loader on the CC2511. This will require that you have a CC Debugger [11].

First, you will have to remove the LCD from the TrxEB to get access to the debug connector for the CC2511 (P200). The LCD might be difficult to remove and can easily break if you use excessive force. Once the LCD is removed, connect the CC Debugger to P200 with the small flat-cable and adapter board included with the debugger.

Next, apply power to the TrxEB board from a suitable power source (e.g. USB). Then connect the CC Debugger to the PC via a USB cable and press the reset button on the debugger. The GREEN LED on the debugger should now be turned on to indicate that it has detected the CC2511 device on the TrxEB. If the RED LED is turned on, verify that the voltage level on the TrxEB is 3.3V and that the debugger is connected correctly (note the orientation of pin 1 on the debugger cable).

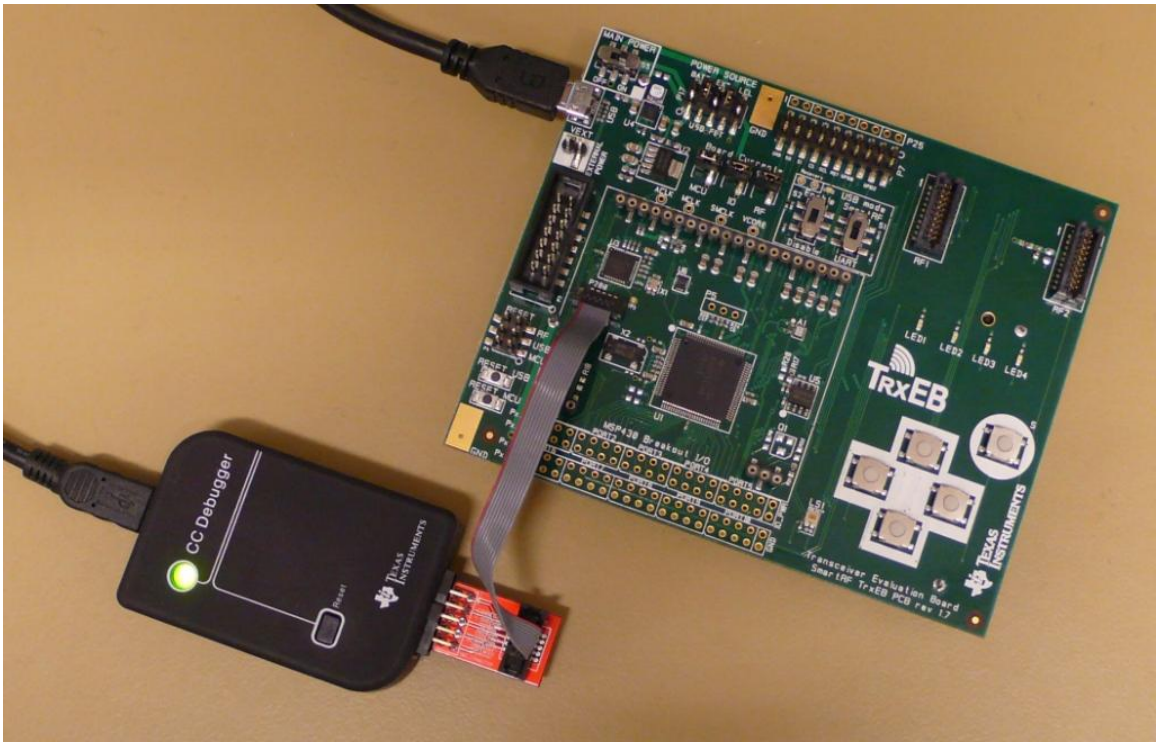

Figure 33 – Proper connection for board resurrection.

If the RED LED on the debugger remains on, the TrxEB is most likely broken. Please contact your TI representative for a possible replacement.

If the GREEN LED on the debugger is on, you can proceed with programming the boot loader from SmartRF Flash Programmer.

In SmartRF Flash Programmer, first select “Program Evaluation Board” and then go to the “EB bootloader” tab. The screenshot below shows the settings you will need to use.

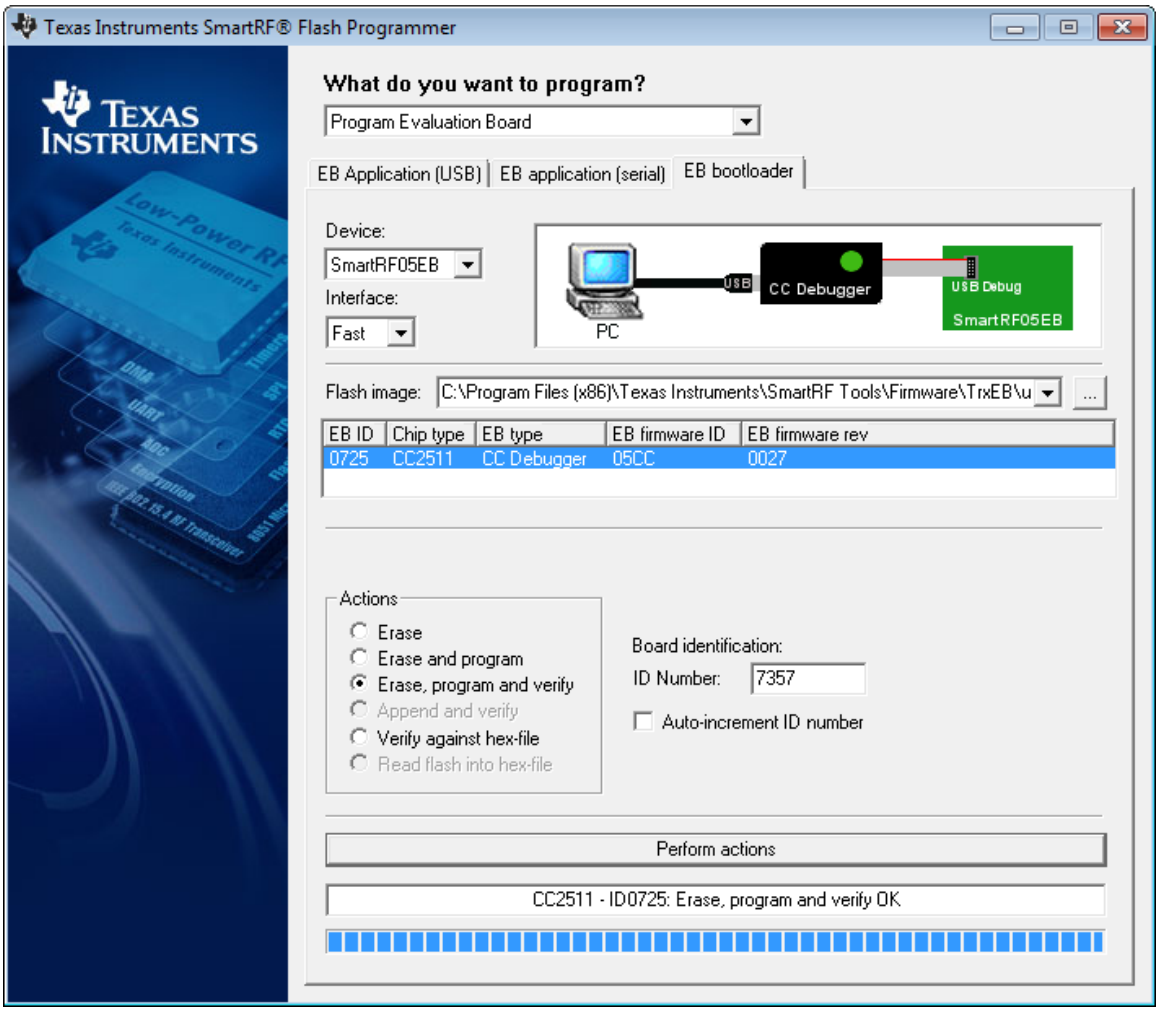

- In the Device drop down list, select SmartRF05EB.
- The interface speed can be set to Fast.
- The flash image to program is C:\Program Files (x86)\Texas Instruments\SmartRF Tools\Firmware\TrxEB\usb_bootloader_trxeb.hex
- In the list of connected devices, you should see the CC Debugger connected to the CC2511.
- Select “Erase, program and verify” from the list of actions.
- Give the board a unique ID number.

When all of the above is set, press the “Perform actions” button.

If everything went well, the yellow USB Led on the TrxEB should start blinking rapidly. This means that the boot loader is running and that it is waiting for the firmware to be programmed. Follow the steps in the first section of this chapter to program the firmware.

12 Frequently Asked Questions

Q1 **I have a SmartRF TrxEB that says revision 1.1 on the PCB, but rev. 1.1 is not mentioned in the User's Guide. Why?**

A1 Your SmartRF TrxEB is what this document calls revision 1.3.0. This user's guide refers to the assembly revision of the EB. On SmartRF TrxEB (assembly) revision 1.3.0, the PCB revision is 1.1. For EB revisions 1.5.0 and 1.7.0, PCB revisions are synchronized with the assembly revision, being 1.5 and 1.7, respectively.

Q2 **How do I check the firmware revision on the evaluation board?**

A2 You can use both SmartRF Studio and SmartRF Flash Programmer to check the firmware revision. Connect the EB to a PC via USB and launch e.g. the SmartRF Flash Programmer. Select the "EB application (USB)" tab. The SmartRF board should be listed with relevant information about the firmware running on the board. In the below example, the EB firmware revision is 0009.

Q3 **Installation of USB drivers for the evaluation board fails. Help!**

A3 Please refer to design note DN304 [2] on the TI web for help regarding installation of the Cxxxx Development Tools USB driver (Cebal).

Q4 **Nothing happens when I power up the evaluation board. Why?**

A4 Make sure the power selection jumpers on header P17 are set according to your power source (see section 6.3). Check that the Mode Selection switches (section 6.1) are not set to disable the USB MCU. Also, make sure the board current jumpers (P10, P13 and P15) are all short circuited.

Q5 **When powering up the evaluation board, LED D6 starts blinking. Why?**

A5 LED D6 (aka. USB LED) indicates the state of the TrxEB. If the observed behavior is short blinks with long pauses (0.1 s ON, 0.9 s OFF), the EB firmware does not detect any connected chip. If an EM is connected, the firmware does not support the connected EM. Try updating the EB firmware using SmartRF Studio or SmartRF Flash Programmer (see chapter 11).

If the blink frequency is about 1 Hz (0.5 s ON, 0.5 s OFF), the USB MCU bootloader has entered a forced boot recovery mode (set during programming of the device). Power off the system and turn it back on to start the application.

If the blinking is more rapid (10 times per second) the bootloader could not find a valid application in flash. Use SmartRF Studio or SmartRF Flash Programmer to program a new firmware on the board.

See section 6.9.2 for more details on LED D6 states.

Q6 **I already have a SmartRF TrxEB revision 1.3.0/1.5.0 and I have written a lot of software for the MSP430 MCU on that board. Now, I get revision 1.7.0 in new development kits. Do I need to rewrite all of my software?**

A6 No, you do not need to rewrite your software. The hardware connection between the onboard MSP430 and the EM remains the same in revision 1.7.0. The difference is that in revision 1.7.0, an extra switch has been added between the USB MCU and the MSP430/EM. This

switch gives the USB MCU access to extra EM I/O in SmartRF Mode, allowing support for combo EMs (e.g. CC1101-CC1190). See section 10.2 for further details on hardware changes in EB revision 1.7.0 and chapter.

Q7 I have a CC1101-CC1190EM combo board. Will it work with SmartRF TrxEB and SmartRF Studio?

A7 Yes and no. Yes, you can connect the CC1101-CC1190EM to the TrxEB and control the combo board from the MSP430. However, this assembly is not yet fully supported by SmartRF Studio. Studio does support the CC1101-CC1190 combo, but the automatic control of the signals to the CC1190 device is currently only supported on SmartRF04EB.

You can of course still use TrxEB + CC1101-CC1190EM in SmartRF Studio, as all the relevant RF registers will be correct, but you need to “help” the system to set the CC1190 device in the right mode. Use the jumpers on the EM to control the LNA/PA/HGM signals. For all RX tests, the LNA signal should be high (PA low) and for all TX tests, the PA signal should be high (LNA low).

13 References

[1] **SmartRF Studio Product Page**
www.ti.com/smartrfstudio

[2] **DN304 – CCxxxx Development Tools USB Driver Installation Guide**
www.ti.com/lit/swra366

[3] **CC2511F32 Product Page**
www.ti.com/product/cc2511f32

[4] **SmartRF Flash Programmer Product Page**
www.ti.com/tool/flash-programmer

[5] MSP430x5xx/MSP430x6xx Family User's Guide
www.ti.com/lit/slau208

[6] MSP430F5438A Product Page
www.ti.com/product/msp430f5438a

[7] Electronic Assembly DOGM128-6 Datasheet
http://www.lcd-module.com/eng/pdf/grafik/dogm128e.pdf

[8] VTI CMA3000-D01
http://www.vti.fi/en/products/accelerometers/consumer_electronics/cma3000_series/

[9] Osram SFH 5711
http://www.osram-os.com/

[10] **Micron M25PE Datasheet**
http://www.micron.com/~/media/Documents/Products/Data%20Sheet/NOR%20Flash/5965M25PE20_10.ashx

[11] **CC Debugger**
www.ti.com/tool/cc-debugger

14 Document History

Revision	Date	Description/Changes
SWRU294A	2012-02-10	Updated with information about revision 1.7.0. Corrected information about use of CC1101-CC1190EM on TrxEB. Added information about board resurrection. Added some more information about the EM connector/interface.
SWRU294	2011-06-30	Initial release.

Appendix A

Schematics

SmartRF TrxEB 1.3.0

USB Interface

- CC2511
- CC2511 debug
- USB enable switch
- USB mode select switch
- USB port

IO_PWR
USB_VBUS
RF_UART_RXD/RF_SPI1_MOSI
P1_3
USB_UART_RTS
USB_UART_CTS
USB_UART_TXD
USB_UART_RXD
P1_7
MCU_RESET_N
RF_RESET_N
RF_SPI0_CS_N
RF_SPI0_SCLK
RF_SPI0_MOSI
RF_SPI0_MISO
USB_RESET_N

Sheet 2

EXT I/O

P1-P5

Sheet 7

P6-P10

Power Supply

- Power ON/OFF switch
- External power terminals
- Regulators
- Power jumpers
- Batteries

USB_VBUS
LCL_PWR
FET_PWR
RF_PWR
MCU_PWR
IO_PWR

Sheet 3

RF Interface

- RF connection

RF_PWR
P1_4/RF_SPI1_CS_N
P8_2
RF_UART_TXD/RF_SPI1_MISO
RF_UART_RXD/RF_SPI1_MOSI
P8_3
P1_2/RF_SPI1_SCLK
P8_4
P8_5
P1_0
P1_1
P1_5
RF_RESET_N
P1_7
P1_3
RF_SPI0_CS_N
RF_SPI0_SCLK
RF_SPI0_MOSI
RF_SPI0_MISO

Sheet 5

MCU

- MSP430F5438A
- JTAG
- XTAL

FET_PWR
LCL_PWR
MCU_PWR
P1_0
P1_1
P1_2/RF_SPI1_SCLK
P1_3
P1_4/RF_SPI1_CS_N
P1_5
P1_6
P1_7
ACC_INT
BTN_LEFT
BTN_RIGHT
BTN_SELECT
BTN_UP
BTN_DOWN
P2_6
USB_UART_CTS
RF_SPI0_CS_N
RF_SPI0_MOSI
RF_SPI0_MISO
RF_SPI0_SCLK
RF_UART_TXD/RF_SPI1_MISO
RF_UART_RXD/RF_SPI1_MOSI
LCD_BL
LED_1
LED_2
LED_3
LED_4
USB_UART_RTS
P4_5
P4_6
P4_7

Sheet 4

LCD_PWR
FLASH_PWR
USB_UART_TXD
USB_UART_RXD
FLASH_RESET_N
LCD_RESET_N
MCU_RESET_N
RF_RESET_N
P8_1
P8_2
P8_3
P8_4
P8_5
FLASH_CS_N
ACC_CS_N
IO_SPI1_SCLK
IO_SPI0_MOSI
IO_SPI0_MISO
IO_SPI0_SCLK
IO_SPI1_MOSI
IO_SPI1_MISO
LCD_CS_N
LCD_MODE
P10_0
P10_1
P10_2
P10_3
P10_4
P10_5
P10_6
P10_7

User Interface

- LCD
- External Flash
- LEDs
- Buttons (4+1)
- Accelerometer
- Ambient Light Sensor
- Reset buttons

LCD_PWR
LCD_BL
IO_SPI0_MOSI
IO_SPI0_MISO
IO_SPI0_SCLK
FLASH_CS_N
FLASH_RESET_N
LCD_CS_N
LCD_MODE
FLASH_PWR
IO_SPI1_MOSI
IO_SPI1_MISO
IO_SPI1_SCLK
ACC_CS_N
ACC_INT
ALS_PWR
ALS_OUT
MCU_RESET_N
USB_RESET_N
RF_RESET_N
LCD_RESET_N
LED_1
LED_2
LED_3
LED_4
BTN_LEFT
BTN_RIGHT
BTN_SELECT
BTN_UP
BTN_DOWN

Sheet 6

FIDUCIAL_MARK FM1
FIDUCIAL_MARK FM3
FIDUCIAL_MARK FM5
FIDUCIAL_MARK FM4
FIDUCIAL_MARK FM6
FIDUCIAL_MARK FM2

CONTRACT NO. XXX		COMPANY NAME TI Norway, LPW	
APPROVALS	DATE	DWG TrxEB Top Level	
DRAWN	EIV OAT	SIZE A3	FSCM NO. / DWG NO. / REV. 1.3.0
CHECKED			
ISSUED		SCALE	SHEET 1(7)

USB SoC Debug

IO_PWR

R21 R_47K_0402_F

S2 SMD_SWITCH_DPDT

USB_ENABLE

R23 R_47K_0402_F

R46 R_47K_0402_F

S1 SMD_SWITCH_DPDT

USB_MODE

R47 R_47K_0402_F

P200 STL21 SMD_2x5_1.27MM

P202 STL21 SMD_2x5_1.27MM

USB_RESET_N

L4 L_BEAD_102_0402

C_100N_0402_X5R_K_10 C17

C_100N_0402_X5R_K_10 C18

C_1U_0402_X5R_K_6P3 C16

C_220P_0402_NP0_J_50 C33

C_100N_0402_X5R_K_10 C35

C_100N_0402_X5R_K_10 C36

C_220P_0402_NP0_J_50 C34

C_2U2_0603_X5R_K_10 C37

U3 CC2511

2	DVDD
12	DVDD
28	DGUARD
29	AVDD_DREG
30	DCOUPL
19	AVDD
22	AVDD
25	AVDD
26	AVDD
14	P2_0
15	P2_1
16	P2_2
4	P1_0/LED
3	P1_1/LED
1	P1_2
36	P1_3
35	P1_4
34	P1_5
33	P1_6
32	P1_7
23	RF_P
24	RF_N
17	P2_3/XOSC32_Q1
18	P2_4/XOSC32_Q2
5	P0_0/ATEST
6	P0_1
7	P0_2
8	P0_3
9	P0_4
13	P0_5
21	XOSC_Q1
20	XOSC_Q2
27	RBIAS
10	PADP
11	PADM
31	RESET_N
37	GND Exposed

USB_DBG_DD

USB_DBG_DC

RF_UART_RXD/RF_SPI1_MOSI

USB_PULLUP

P1_3

USB_UART_RTS

USB_UART_CTS

USB_UART_TXD

USB_UART_RXD

USB_ENABLE

P1_7

MCU_RESET_N

RF_RESET_N

RF_SPI0_CS_N

RF_SPI0_SCLK

RF_SPI0_MOSI

RF_SPI0_MISO

USB_MODE

USB_LED

TESTPOINT_CIRCLE_40MILS TP11

R44 R_56K_0402_F

R22 R_47K_0402_F

X1 X_48.000/15/18/60/16

C20 C_33P_0402_NP0_J_50

C19 C_33P_0402_NP0_J_50

GND

USB LED

R43 R_270_0402_F

D6 LED_EL19-21UYC_A2

P12 USB-B_MICRO

VBUS	1
D-	2
D+	3
ID	4
GND	5
Shield	6
Shield	7

USB_VBUS

R9 R_1K5_0402_G

R12 R_33_0402_G

R11 R_33_0402_G

C2 C_47P_0402_NP0_J_50

C3 C_47P_0402_NP0_J_50

CONTRACT NO. XXX		COMPANY NAME TI Norway, LPW	
APPROVALS	DATE	DWG USB Interface	
DRAWN	EIV OAT	SIZE A3	FSCM NO. / DWG NO. / REV. 1.3.0
CHECKED			
ISSUED		SCALE	SHEET 27(1)

VBAT

R_0603 R70

Do Not Mount

R_1M0_0603_J R68

R_180K_0603_G R69

R_1M0_0402_F R45

R_0_0603 R34

U4
TPS63000
FB Vout
GND L2
VINA PGND
PS L1
EN Vin
Thermal

L1
LPS3015-222ML
2.2uH

MAX 1200mA

C9 C_4U7_0805_X5R_K_25
C38 C_100N_0402_X5R_K_10
C10 C_4U7_0805_X5R_K_25
C11 C_10U_0805_X5R_K_10

TPS63000 Feedback :
R68 - 1M0, R69 - 180K
TPS63001 Feedback :
R68 - 0, R69 - Not Mounted

RF_PWR jumper
PINROW_SMD_1X2_2.54MM
P15
RF_PWR

MCU_PWR jumper
PINROW_SMD_1X2_2.54MM
P13
MCU_PWR

IO_PWR jumper
PWR1
PINROW_SMD_1X2_2.54MM
P10
IO_PWR

Power On/Off
S5
SMD_SWITCH_DPDT
VBAT

EXTERNAL POWER
PINROW_SMD_2X5_2.54MM
2PIN_SMD_TERMINAL_BLOCK
P201

P17
VBAT_REG
VUSB_REG
VEXT
FET_PWR
LCL_PWR

USB POWER
USB_VBUS
U2
TPS7A4501
In Out
SHDN ADJ
Gnd Gnd
C1 C_10U_0805_X5R_L_25
R63 R_6K2_0603_G
R64 R_3K6_0603_G
C8 C_10U_0805_X5R_K_10

Battery
1XAA_1_5V B3
1XAA_1_5V B4

Power Jumper Settings:

Battery : 1-2 & 9-10
USB : 3-4 & 9-10
EXTERNAL: 5-6 & 9-10
FET_PWR : 7-8, (Disconnect 9-10)

CONTRACT NO. XXX		COMPANY NAME TI Norway, LPW			
APPROVALS	DATE	DWG Power Supply			
DRAWN	EIV OAT	SIZE A3	FSCM NO.	DWG NO.	REV. 1.3.0
CHECKED		SCALE			SHEET 3(7)
ISSUED					

Ext. Osc.
Not mounted !

P5
PINROW_1X3
P5_3/XT2OUT
P5_2/XT2IN
C47
C6
C_22P_0402_NP0_J_50
C_22P_0402_NP0_J_50

JTAG
P3
FET_PWR
LCL_PWR

C4
C_2N2_0603_X7R_K_50
R3
R_47K_0402_F
DVCC

TEST POINTS

TESTPOINT_PAD
TP1

ACLK — TESTPOINT_CIRCLE_40MILS TP5
MCLK — TESTPOINT_CIRCLE_40MILS TP6
SMCLK — TESTPOINT_CIRCLE_40MILS TP7
VCORE — TESTPOINT_CIRCLE_40MILS TP8

MCU_RESET_N

C5
C_100N_0402_X5R_K_10
DVCC

PINROW_SMD_2X7_2.54MM_DEBUG

MCU_PWR
R1
R_10_0402_J
AVCC
R4
R_0_0603
DVCC
C7
C_4U7_0603_X5R_K_6
C12
C_4U7_0603_X5R_K_6
C13
C_100N_0402_X5R_K_10
P5_1
P5_0
C48
C_0603
C14
C_0603

X2
X_32.768/20/50/40/12.5
C25
C_15P_0402_NP0_J_50
C24
C_15P_0402_NP0_J_50
C23
C_100N_0402_X5R_K_10
DVCC

U1
MSP430F5438AIPZ

P6_4 — P6.4/A4
P6_5 — P6.5/A5
P6_6 — P6.6/A6
P6_7 — P7.4/A12
P7_4 — P7.5/A13
P7_5 — P7.6/A14
FLASH_PWR — P7.7/A15
LCD_PWR — P5.0/VREF+/VEREF+
P5.1/VREF-/VEREF-
AVCC
AVSS
P7_0/XIN — P7.0/XIN
P7_1/XOUT — P7.1/XOUT
DVSS1
DVCC1
P1_0 — P1.0/TA0CLK/ACLK
P1_1 — P1.1/TA0.0
P1_2/RF_SPI1_SCLK — P1.2/TA0.1
P1_3 — P1.3/TA0.2
P1_4/RF_SPI1_CS_N — P1.4/TA0.3
P1_5 — P1.5/TA0.4
P1_6 — P1.6/SMCLK
P1_7 — P1.7
ACC_INT — P2.0/TA1CLK/MCLK

P6_3 — P6.3/A3
ALS_OUT — P6.2/A2
ALS_PWR — P6.1/A1
ACC_PWR — P6.0/A0
TCK — /RST/NMI/SBWTDIO
TMS — PJ.3/TCK
TDI — PJ.2/TMS
TDO — PJ.1/TDI/TCLK
TEST — PJ.0/TDO
P5_3/XT2OUT — TEST/SBWTCK
P5_2/XT2IN — P5.3/XT2OUT
SMCLK — P5.2/XT2IN
MCLK — DVSS4
ACLK — DVCC4
P10_7 — P11.2/SMCLK
P10_6 — P11.1/MCLK
P10_5 — P11.0/ACLK
P10_4 — P10.7
P10_3 — P10.6
P10_2 — P10.5/UCA3RXDUCA3SOMI
P10_1 — P10.4/UCA3TXD/UCA3SIMO
P10_0 — P10.3/UCB3CLK/UCA3STE
P10.2/UCB3SOMI/UCB3SCL
P10.1/UCB3SIMO/UCB3SDA
P10.0/UCB3STE/UCA3CLK

P9.7 — 75 LCD_MODE
P9.6 — 74 LCD_CS_N
P9.5/UCA2RXDUCA2SOMI — 73 IO_SPI1_MISO
P9.4/UCA2TXD/UCA2SIMO — 72 IO_SPI1_MOSI
P9.3/UCB2CLK/UCA2STE — 71 IO_SPI0_SCLK
P9.2/UCB2SOMI/UCB2SCL — 70 IO_SPI0_MISO
P9.1/UCB2SIMO/UCB2SDA — 69 IO_SPI0_MOSI
P9.0/UCB2STE/UCA2CLK — 68 IO_SPI1_SCLK
P8.7 — 67 ACC_CS_N
P8.6/TA1.1 — 66 FLASH_CS_N
P8.5/TA1.0 — 65 P8_5
DVCC2 — 64
DVSS2 — 63
VCORE — 62 VCORE
P8.4/TA0.4 — 61 P8_4
P8.3/TA0.3 — 60 P8_3
P8.2/TA0.2 — 59 P8_2
P8.1/TA0.1 — 58 P8_1
P8.0/TA0.0 — 57 RF_RESET_N
P7.3/TA1.2 — 56 LCD_RESET_N
P7.2/TB0OUTH/SVMOUT — 55 FLASH_RESET_N
P5.7/UCA1RXD/UCA1SOMI — 54 USB_UART_RXD
P5.6/UCA1TXD/UCA1SIMO — 53 USB_UART_TXD
P5.5/UCB1CLK/UCA1STE — 52 P1_2/RF_SPI1_SCLK
P5.4/UCB1SOMI/UCB1SCL — 51 RF_UART_TXD/RF_SPI1_MISO

DVCC
C22
C_100N_0402_X5R_K_10
C21
C_4U7_0603_X5R_K_6

P2.1/TA2.0 — 26 BTN_LEFT
P2.2/TA2.1 — 27 BTN_RIGHT
P2.3/TA2.2 — 28 BTN_SELECT
P2.4/RTCCLK — 29 BTN_UP
P2.5 — 30 BTN_DOWN
P2.6/ACLK — 31 P2_6
P2.7/ADC12CLK/DMAE0 — 32 USB_UART_CTS
P3.0/UCB0STE/UCA0CLK — 33 RF_SPI0_CS_N
P3.1/UCB0SIMO/UCB0SDA — 34 RF_SPI0_MOSI
P3.2/UCB0SOMI/UCB0SCL — 35 RF_SPI0_MISO
P3.3/UCB0CLK/UCA0STE — 36 RF_SPI0_SCLK
DVSS3 — 37
DVCC3 — 38
P3.4/UCA0TXD/UCA0SIMO — 39 RF_UART_TXD/RF_SPI1_MISO
P3.5/UCA0RXD/UCA0SOMI — 40 RF_UART_RXD/RF_SPI1_MOSI
P3.6/UCB1STE/UCA1CLK — 41 LCD_BL
P3.7/UCB1SIMO/UCB1SDA — 42 RF_UART_RXD/RF_SPI1_MOSI
P4.0/TB0.0 — 43 LED_1
P4.1/TB0.1 — 44 LED_2
P4.2/TB0.2 — 45 LED_3
P4.3/TB0.3 — 46 LED_4
P4.4/TB0.4 — 47 USB_UART_RTS
P4.5/TB0.5 — 48 P4_5
P4.6/TB0.6 — 49 P4_6
P4.7/TB0.7/TBCLK — 50 P4_7

DVCC
C15
C_100N_0402_X5R_K_10

CONTRACT NO. XXX		COMPANY NAME TI Norway, LPW	
APPROVALS	DATE	DWG Application MCU	
DRAWN	EIV OAT	SIZE A3	FSCM NO. / DWG NO. / REV. 1.3.0
CHECKED		SCALE	SHEET 4(7)
ISSUED			

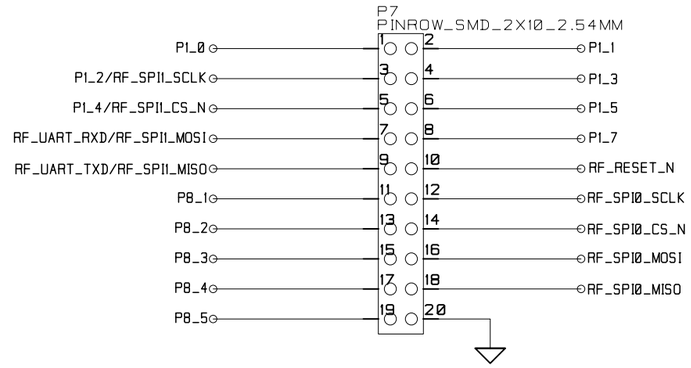

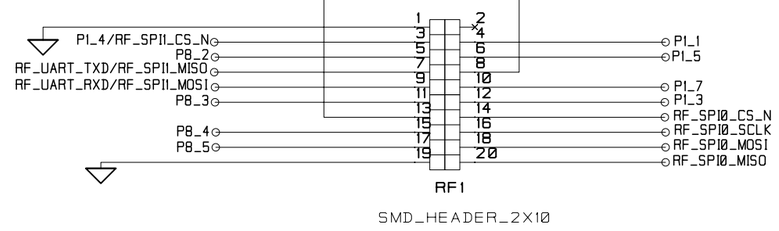

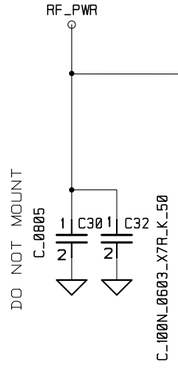

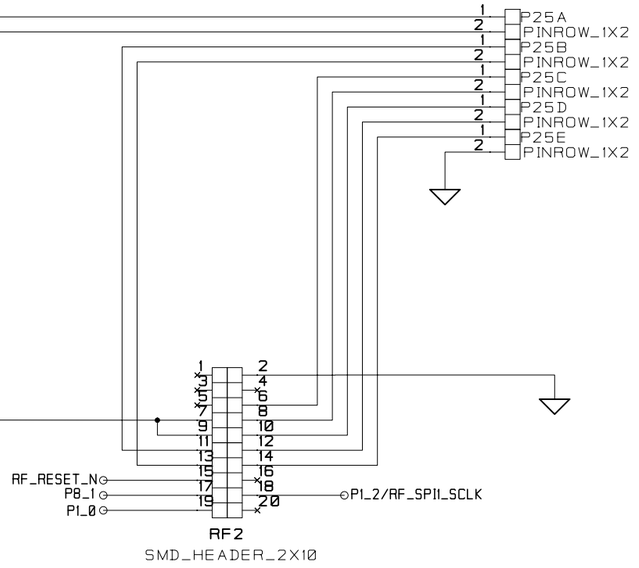

Connectors RF1 and RF2 are SMD,
2x10 pin row headers with 0.05 spacing.
P/N TFM-110-02-SM-D-A-K, produced by Samtec.

The matching connector used on RF
evaluation modules are SFM-110-02-SM-D-A-K.

The distance between RF1 and RF2 is 1200 mils
(center to center).

CONTRACT NO. XXX		COMPANY NAME TI Norway, LPW	
APPROVALS	DATE	DWG EM Interface	
DRAWN	EIV OAT	SIZE A3	FSCM NO. / DWG NO. / REV. 1.3.0
CHECKED			
ISSUED		SCALE	SHEET 5(7)

EXTERNAL FLASH

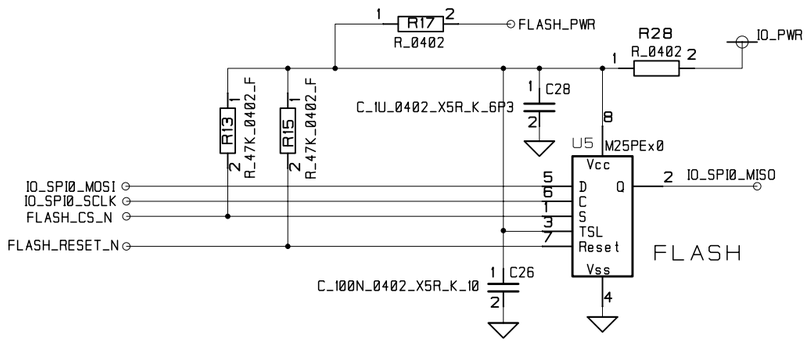

ACCELEROMETER

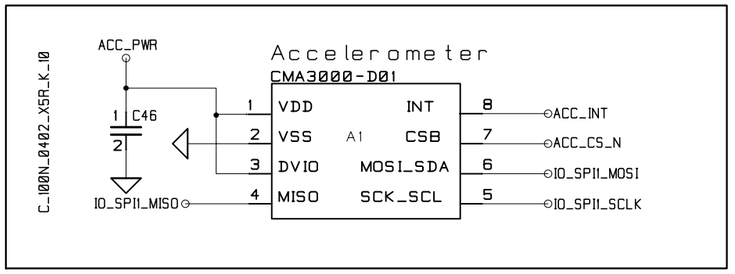

LEDS

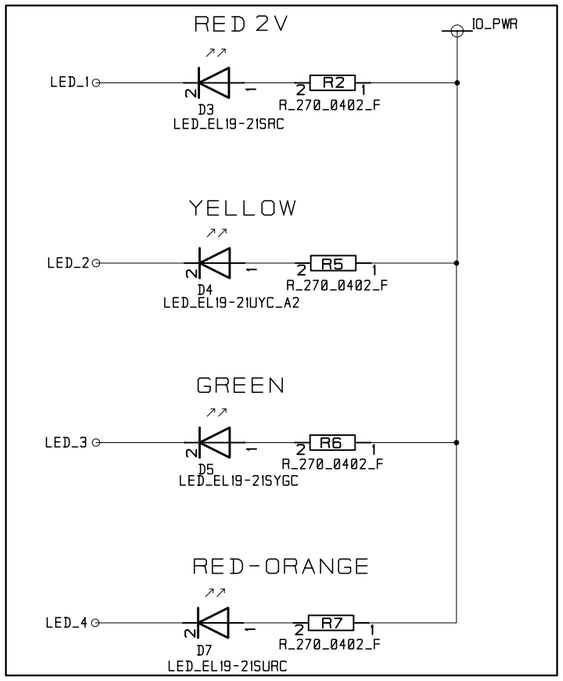

AMBIENT LIGHT SENSOR

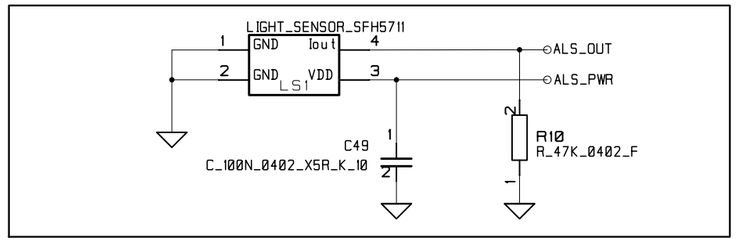

LCD

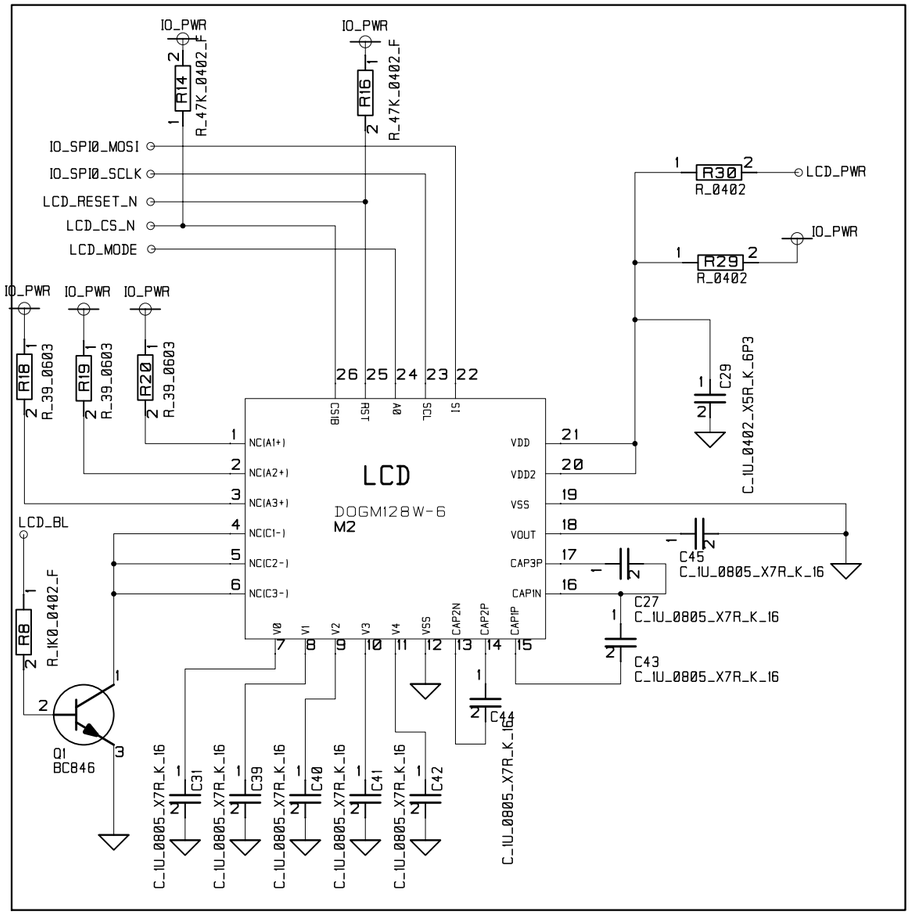

RESET BUTTONS

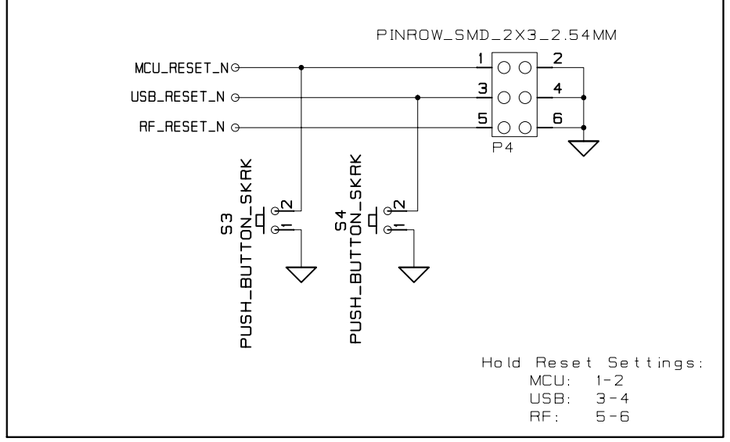

BUTTONS

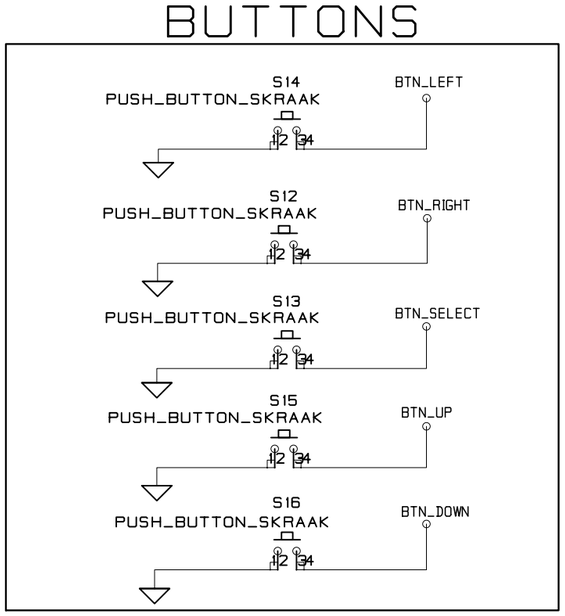

Q1,R8,R18,R19 and R20 Not Mounted when Backlight module (EA LED55x46) is not used, by default there will be no backlight module.

CONTRACT NO. XXX		COMPANY NAME TI Norway, LPW	
APPROVALS	DATE	DWG User Interface	
DRAWN	EIV OAT	SIZE A3	FSCM NO. / DWG NO. / REV. 1.3.0
CHECKED		SCALE	SHEET 6(7)
ISSUED			

EXTERNAL I/O

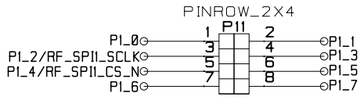

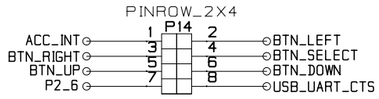

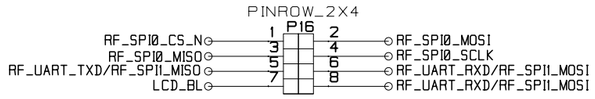

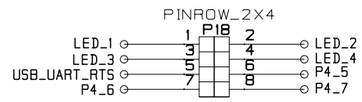

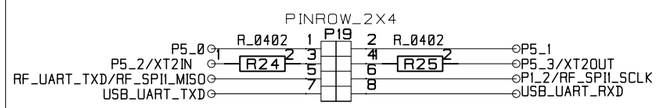

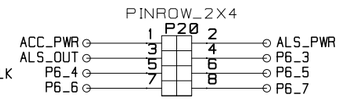

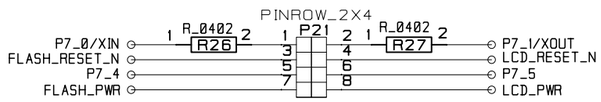

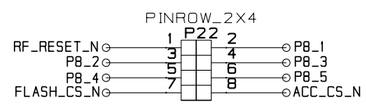

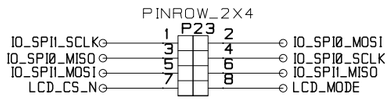

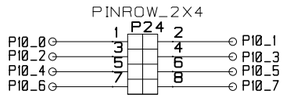

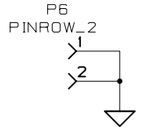

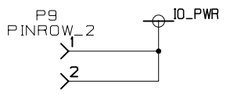

CONTRACT NO. XXX		COMPANY NAME TI Norway, LPW	
APPROVALS	DATE	DWG	
DRAWN	EIV OAT		
CHECKED		SIZE A3 / FSCM NO. / DWG NO. / REV. 1.3.0	
ISSUED		SCALE	SHEET 7 (7)

Appendix B

Schematics

SmartRF TrxEB 1.5.0

USB Interface

- CC2511
- CC2511 debug
- USB enable switch
- USB mode select switch
- USB port

IO_PWR
USB_VBUS
RF_UART_RXD/RF_SPI1_MOSI
P1_3
USB_UART_RTS
USB_UART_CTS
USB_UART_TXD
USB_UART_RXD
P1_7
MCU_RESET_N
RF_RESET_N
RF_SPI0_CS_N
RF_SPI0_SCLK
RF_SPI0_MOSI
RF_SPI0_MISO
USB_RESET_N

Sheet 2

EXT I/O

P1-P5

Sheet 7

P6-P10

Power Supply

- Power ON/OFF switch
- External power terminals
- Regulators
- Power jumpers
- Batteries

USB_VBUS
LCL_PWR
FET_PWR
RF_PWR
MCU_PWR
IO_PWR

Sheet 3

RF Interface

- RF connection

RF_PWR
P1_4/RF_SPI1_CS_N
P8_2
RF_UART_TXD/RF_SPI1_MISO
RF_UART_RXD/RF_SPI1_MOSI
P8_3
P1_2/RF_SPI1_SCLK
P8_4
P8_5
P1_0
P1_1
P1_5
RF_RESET_N
P1_7
P1_3
RF_SPI0_CS_N
RF_SPI0_SCLK
RF_SPI0_MOSI
RF_SPI0_MISO

Sheet 5

MCU

- MSP430F5438A
- JTAG
- XTAL

P1_0
P1_1
P1_2/RF_SPI1_SCLK
P1_3
P1_4/RF_SPI1_CS_N
P1_5
P1_6
P1_7
ACC_INT
BTN_LEFT
BTN_RIGHT
BTN_SELECT
BTN_UP
BTN_DOWN
P2_6
USB_UART_CTS
RF_SPI0_CS_N
RF_SPI0_MOSI
RF_SPI0_MISO
RF_SPI0_SCLK
RF_UART_TXD/RF_SPI1_MISO
RF_UART_RXD/RF_SPI1_MOSI
LCD_BL
LED_1
LED_2
LED_3
LED_4
USB_UART_RTS
P4_5
P4_6
P4_7

FET_PWR
LCL_PWR
MCU_PWR
LCD_PWR
FLASH_PWR
USB_UART_TXD
USB_UART_RXD
FLASH_RESET_N
LCD_RESET_N
MCU_RESET_N
RF_RESET_N
P8_1
P8_2
P8_3
P8_4
P8_5
FLASH_CS_N
ACC_CS_N
IO_SPI1_SCLK
IO_SPI0_MOSI
IO_SPI0_MISO
IO_SPI0_SCLK
IO_SPI1_MOSI
IO_SPI1_MISO
LCD_CS_N
LCD_MODE
PI0_0
PI0_1
PI0_2
PI0_3
PI0_4
PI0_5
PI0_6
PI0_7

Sheet 4

User Interface

- LCD
- External Flash
- LEDs
- Buttons (4+1)
- Accelerometer
- Ambient Light Sensor
- Reset buttons

LCD_BL
IO_SPI0_MOSI
IO_SPI0_MISO
IO_SPI0_SCLK
FLASH_CS_N
FLASH_RESET_N
LCD_CS_N
LCD_MODE
LCD_PWR
FLASH_PWR
IO_SPI1_MOSI
IO_SPI1_MISO
IO_SPI1_SCLK
ACC_CS_N
ACC_INT
ALS_PWR
ALS_OUT
MCU_RESET_N
USB_RESET_N
RF_RESET_N
LCD_RESET_N
LED_1
LED_2
LED_3
LED_4
BTN_LEFT
BTN_RIGHT
BTN_SELECT
BTN_UP
BTN_DOWN

Sheet 6

FIDUCIAL_MARK FM1
FIDUCIAL_MARK FM3
FIDUCIAL_MARK FM5
FIDUCIAL_MARK FM4
FIDUCIAL_MARK FM6
FIDUCIAL_MARK FM2

CONTRACT NO. XXX		COMPANY NAME TI Norway, LPW	
APPROVALS	DATE	DWG TrxEB Top Level	
DRAWN	EIV OAT	SIZE A3	FSCM NO. / DWG NO. / REV. 1.5.0
CHECKED			
ISSUED		SCALE	SHEET 1(7)

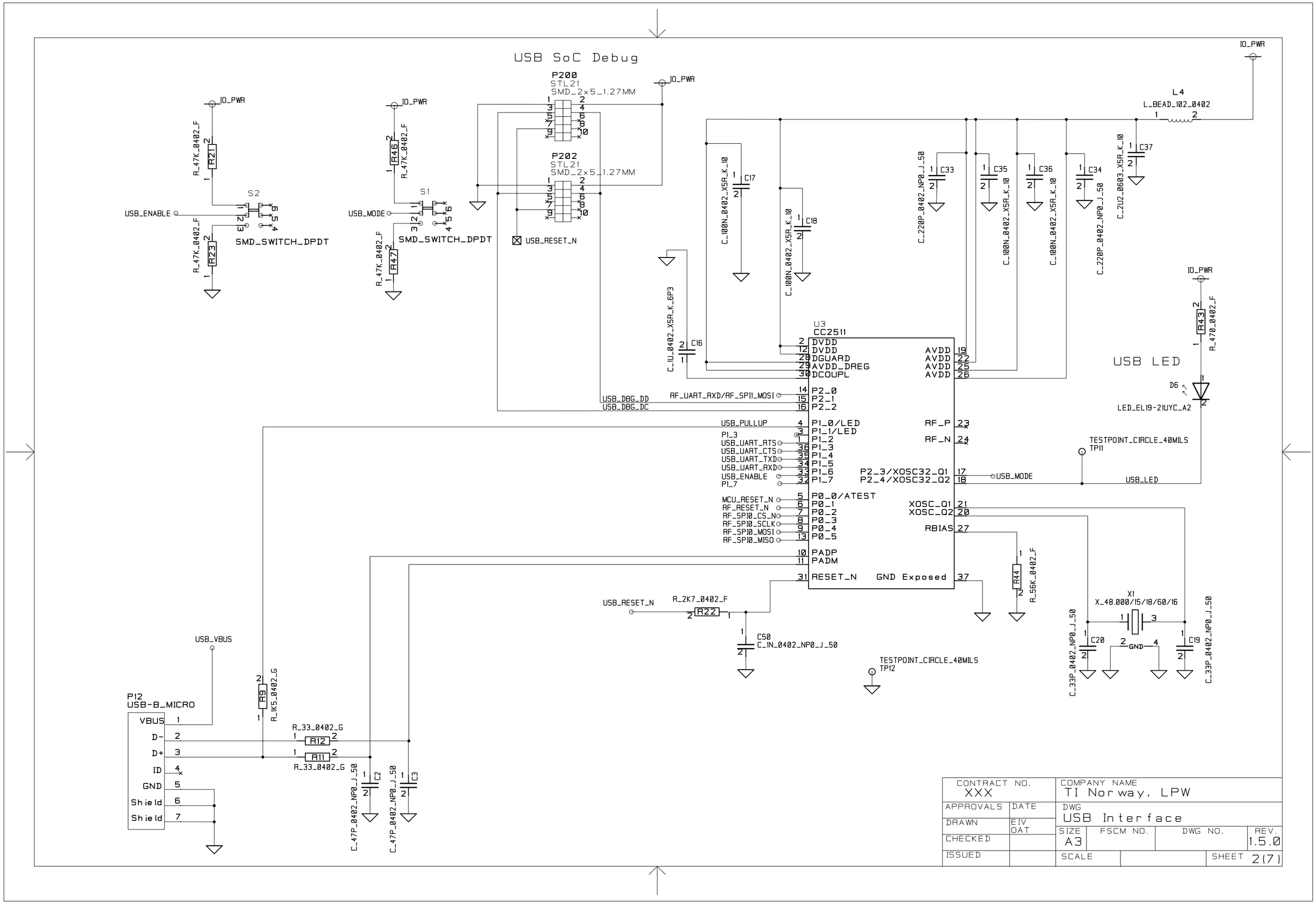
USB SoC Debug
P200
STL21
SMD_2x5_1.27MM
P202
STL21
SMD_2x5_1.27MM
IO_PWR
R_47K_0402_F
R21
R23
R46
R47
S2
S1
USB_ENABLE
USB_MODE
SMD_SWITCH_DPDT
USB_RESET_N
L4
L_BEAD_102_0402
C_100N_0402_X5R_K_10
C17
C18
C_220P_0402_NP0_J_50
C33
C35
C36
C34
C_2U2_0603_X5R_K_10
C37
C_1U_0402_X5R_K_6P3
C16
U3
CC2511
DVDD
DGUARD
AVDD_DREG
DCOUPL
AVDD
P2_0
P2_1
P2_2
RF_UART_RXD/RF_SPI1_MOSI
USB_DBG_DD
USB_DBG_DC
USB_PULLUP
P1_0/LED
P1_1/LED
P1_2
P1_3
P1_4
P1_5
P1_6
P1_7
P1_3
USB_UART_RTS
USB_UART_CTS
USB_UART_TXD
USB_UART_RXD
USB_ENABLE
P1_7
RF_P
RF_N
P2_3/XOSC32_Q1
P2_4/XOSC32_Q2
USB_MODE
USB_LED
TESTPOINT_CIRCLE_40MILS
TP11
MCU_RESET_N
RF_RESET_N
RF_SPI0_CS_N
RF_SPI0_SCLK
RF_SPI0_MOSI
RF_SPI0_MISO
P0_0/ATEST
P0_1
P0_2
P0_3
P0_4
P0_5
XOSC_Q1
XOSC_Q2
RBIAS
PADP
PADM
RESET_N
GND Exposed
R44
R_56K_0402_F
USB_RESET_N
R_2K7_0402_F
R22
C50
C_1N_0402_NP0_J_50
TESTPOINT_CIRCLE_40MILS
TP12
X1
X_48.000/15/18/60/16
GND
C20
C19
C_33P_0402_NP0_J_50
USB LED
R43
R_470_0402_F
D6
LED_EL19-21UYC_A2
USB_VBUS
P12
USB-B_MICRO
VBUS
D-
D+
ID
GND
Shield
Shield
R9
R_1K5_0402_G
R_33_0402_G
R12
R11
C2
C3
C_47P_0402_NP0_J_50
CONTRACT NO.
XXX
COMPANY NAME
TI Norway, LPW
APPROVALS
DATE
DWG
USB Interface
DRAWN
EIV
OAT
CHECKED
ISSUED
SIZE
A3
FSCM NO.
DWG NO.
REV.
1.5.0
SCALE
SHEET
2(7)

VBAT

R_0603 R70

Do Not Mount

R_1M0_0603_J R68

R_180K_0603_G R69

R_1M0_0402_F R45

R_0_0603 R34

U4 TPS63000

FB Vout GND L2 VINA PGND PS L1 EN Vin Thermal

L1 LPS3015-222ML 2.2uH

MAX 1200mA

C9 C_4U7_0805_X5R_K_25

C38 C_100N_0402_X5R_K_10

C10 C_4U7_0805_X5R_K_25

C11 C_10U_0805_X5R_K_10

TPS63000 Feedback :
R68 - 1M0, R69 - 180K
TPS63001 Feedback :
R68 - 0, R69 - Not Mounted

RF_PWR jumper

PINROW_SMD_1X2_2.54MM P15

RF_PWR

MCU_PWR jumper

PINROW_SMD_1X2_2.54MM P13

MCU_PWR

IO_PWR jumper

PWR1

PINROW_SMD_1X2_2.54MM P10

IO_PWR

Power On/Off

S5 SMD_SWITCH_DPDT

VBAT

P17

VBAT_REG VUSB_REG VEXT FET_PWR LCL_PWR

EXTERNAL POWER

PINROW_SMD_2X5_2.54MM 2PIN_SMD_TERMINAL_BLOCK P201

USB POWER

USB_VBUS

U2 TPS7A4501

In Out SHDN ADJ Gnd Gnd

C1 C_10U_0805_X5R_K_16

R63 R_6K2_0603_G

R64 R_3K6_0603_G

C8 C_10U_0805_X5R_K_10

Battery

1XAA_1_5V B3

1XAA_1_5V B4

Power Jumper Settings:

Battery : 1-2 & 9-10
USB : 3-4 & 9-10
EXTERNAL: 5-6 & 9-10
FET_PWR : 7-8, (Disconnect 9-10)

CONTRACT NO. XXX		COMPANY NAME TI Norway, LPW		
APPROVALS	DATE	DWG Power Supply		
DRAWN	EIV OAT	SIZE A3	FSCM NO.	DWG NO. REV. 1.5.0
CHECKED				
ISSUED		SCALE		SHEET 3(7)

Ext. Osc.
Not mounted !

P5
PINROW_1X3
P5_3/XT2OUT
P5_2/XT2IN
C47
C6
C_22P_0603_NP0_J_50
C_22P_0603_NP0_J_50

JTAG
P3
FET_PWR
LCL_PWR
PINROW_SMD_2X7_2.54MM_DEBUG

C4
C_2N2_0603_X7R_K_50
R3
R_47K_0402_F
DVCC
MCU_RESET_N

C5
C_100N_0402_X5R_K_10
DVCC

TEST POINTS

ACLK — TESTPIN TP5
MCLK — TESTPIN TP6
SMCLK — TESTPIN TP7
VCORE — TESTPIN TP8

TESTPOINT_PAD
TP1

MCU_PWR
R1
R_10_0402_J
AVCC
R4
R_0_0603
DVCC
C7
C_4U7_0603_X5R_K_6
C12
C_4U7_0603_X5R_K_6
C13
C_100N_0402_X5R_K_10
P5_1
C48
C_0603
P5_0
C14
C_0603
C_100N_0402_X5R_K_10
C23
X_32.768/20/50/40/12_50
X2
C24
C_15P_0402_NP0_J_50
C25
C_15P_0402_NP0_J_50
DVCC

MSP430F5438AIPZ
U1

P6_4 — P6.4/A4
P6_5 — P6.5/A5
P6_6 — P6.6/A6
P6_7 — P7.4/A12
P7_4 — P7.5/A13
P7_5 — P7.6/A14
FLASH_PWR — P7.7/A15
LCD_PWR — P5.0/VREF+/VEREF+
P5.1/VREF-/VEREF-
AVCC
AVSS
P7_0/XIN — P7.0/XIN
P7_1/XOUT — P7.1/XOUT
DVSS1
DVCC1
P1.0/TA0CLK/ACLK
P1_0 — P1.1/TA0.0
P1_1 — P1.2/TA0.1
P1_2/RF_SPI1_SCLK — P1.3/TA0.2
P1_3 — P1.4/TA0.3
P1_4/RF_SPI1_CS_N — P1.5/TA0.4
P1_5 — P1.6/SMCLK
P1_6 — P1.7
P1_7 — P2.0/TA1CLK/MCLK
ACC_INT

P6_3 — P6.3/A3
ALS_OUT — P6.2/A2
ALS_PWR — P6.1/A1
ACC_PWR — P6.0/A0
TCK — /RST/NMI/SBWTDIO
TMS — PJ.3/TCK
TDI — PJ.2/TMS
TDO — PJ.1/TDI/TCLK
TEST — PJ.0/TDO
P5_3/XT2OUT — TEST/SBWTCK
P5_2/XT2IN — P5.3/XT2OUT
SMCLK — P5.2/XT2IN
MCLK — DVSS4
ACLK — DVCC4
P10_7 — P11.2/SMCLK
P10_6 — P11.1/MCLK
P10_5 — P11.0/ACLK
P10_4 — P10.7
P10_3 — P10.6
P10_2 — P10.5/UCA3RXDUCA3SOMI
P10_1 — P10.4/UCA3TXD/UCA3SIMO
P10_0 — P10.3/UCB3CLK/UCA3STE
P10.2/UCB3SOMI/UCB3SCL
P10.1/UCB3SIMO/UCB3SDA
P10.0/UCB3STE/UCA3CLK

P9.7 — 75 LCD_MODE
P9.6 — 74 LCD_CS_N
P9.5/UCA2RXDUCA2SOMI — 73 IO_SPI1_MISO
P9.4/UCA2TXD/UCA2SIMO — 72 IO_SPI1_MOSI
P9.3/UCB2CLK/UCA2STE — 71 IO_SPI0_SCLK
P9.2/UCB2SOMI/UCB2SCL — 70 IO_SPI0_MISO
P9.1/UCB2SIMO/UCB2SDA — 69 IO_SPI0_MOSI
P9.0/UCB2STE/UCA2CLK — 68 IO_SPI1_SCLK
P8.7 — 67 ACC_CS_N
P8.6/TA1.1 — 66 FLASH_CS_N
P8.5/TA1.0 — 65 P8_5
DVCC2 — 64
DVSS2 — 63
VCORE — 62 VCORE
P8.4/TA0.4 — 61 P8_4
P8.3/TA0.3 — 60 P8_3
P8.2/TA0.2 — 59 P8_2
P8.1/TA0.1 — 58 P8_1
P8.0/TA0.0 — 57 RF_RESET_N
P7.3/TA1.2 — 56 LCD_RESET_N
P7.2/TB0OUTH/SVMOUT — 55 FLASH_RESET_N
P5.7/UCA1RXD/UCA1SOMI — 54 USB_UART_RXD
P5.6/UCA1TXD/UCA1SIMO — 53 USB_UART_TXD
P5.5/UCB1CLK/UCA1STE — 52 P1_2/RF_SPI1_SCLK
P5.4/UCB1SOMI/UCB1SCL — 51 RF_UART_TXD/RF_SPI1_MISO

P2.1/TAINCLK — 26 BTN_LEFT
P2.2/TACLK — 27 BTN_RIGHT
P2.3/TA0.2 — 28 BTN_SELECT
P2.4/RTCCLK — 29 BTN_UP
P2.5 — 30 BTN_DOWN
P2.6/ACLK — 31 P2_6
P2.7/ADC12CLK/DMAE0 — 32 USB_UART_CTS
P3.0/UCB0STE/UCA0CLK — 33 RF_SPI0_CS_N
P3.1/UCB0SIMO/UCB0SDA — 34 RF_SPI0_MOSI
P3.2/UCB0SOMI/UCB0SCL — 35 RF_SPI0_MISO
P3.3/UCB0CLK/UCA0STE — 36 RF_SPI0_SCLK
DVSS3 — 37
DVCC3 — 38
P3.4/UCA0TXD/UCA0SIMO — 39 RF_UART_TXD/RF_SPI1_MISO
P3.5/UCA0RXD/UCA0SOMI — 40 RF_UART_RXD/RF_SPI1_MOSI
P3.6/UCB1STE/UCA1CLK — 41 LCD_BL
P3.7/UCB1SIMO/UCB1SDA — 42 RF_UART_RXD/RF_SPI1_MOSI
P4.0/TB0.0 — 43 LED_1
P4.1/TB0.1 — 44 LED_2
P4.2/TB0.2 — 45 LED_3
P4.3/TB0.3 — 46 LED_4
P4.4/TB0.4 — 47 USB_UART_RTS
P4.5/TB0.5 — 48 P4_5
P4.6/TB0.6 — 49 P4_6
P4.7/TB0.7/TBCLK — 50 P4_7

DVCC
C15
C_100N_0402_X5R_K_10

DVCC
C22
C_100N_0402_X5R_K_10
C21
C_4U7_0603_X5R_K_6

CONTRACT NO. XXX		COMPANY NAME TI Norway, LPW	
APPROVALS	DATE	DWG Application MCU	
DRAWN	EIV OAT	SIZE A3	FSCM NO. / DWG NO. / REV. 1.5.0
CHECKED		SCALE	SHEET 4(7)
ISSUED			

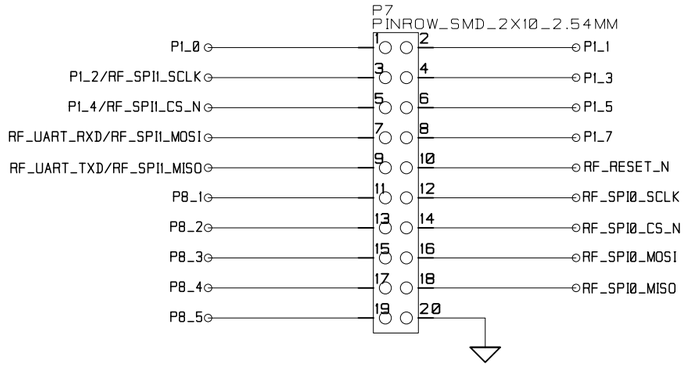

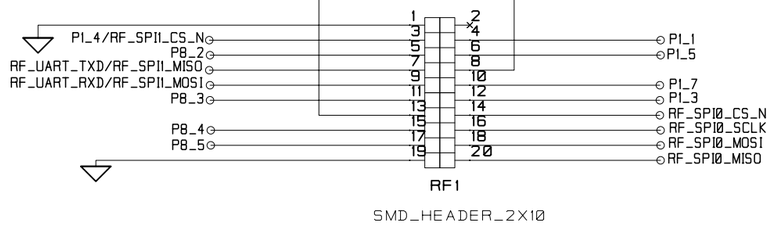

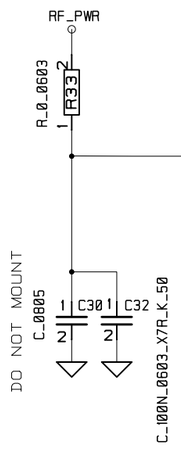

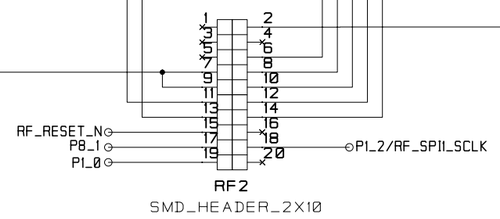

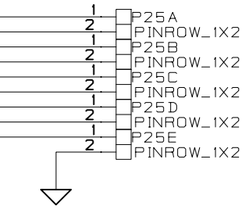

Connectors RF1 and RF2 are SMD,
2x10 pin row headers with 0.05 spacing.
P/N TFM-110-02-SM-D-A-K, produced by Samtec.

The matching connector used on RF
evaluation modules are SFM-110-02-SM-D-A-K.

The distance between RF1 and RF2 is 1200 mils
(center to center).

CONTRACT NO. XXX		COMPANY NAME TI Norway, LPW	
APPROVALS	DATE	DWG EM Interface	
DRAWN	EIV OAT	SIZE A3	FSCM NO. / DWG NO. / REV. 1.5.0
CHECKED			
ISSUED		SCALE	SHEET 5(7)

EXTERNAL FLASH

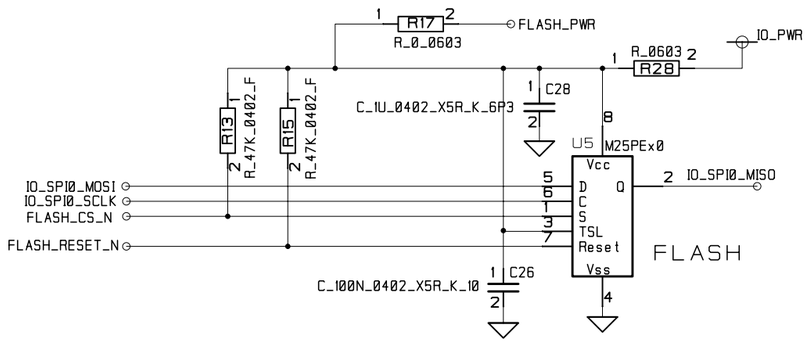

ACCELEROMETER

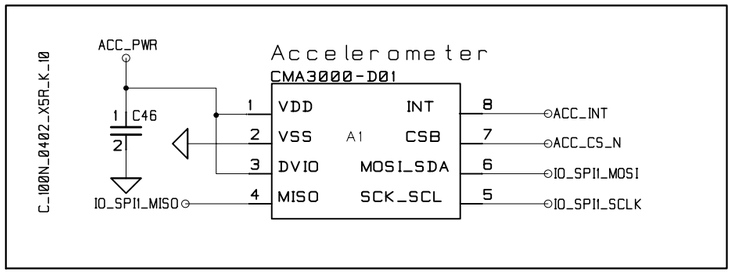

LEDS

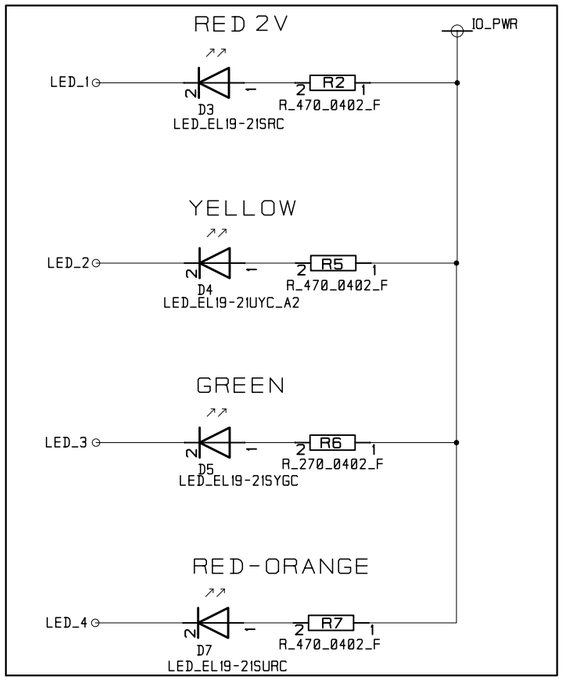

AMBIENT LIGHT SENSOR

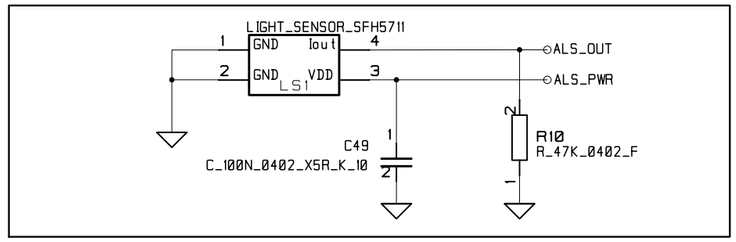

LCD

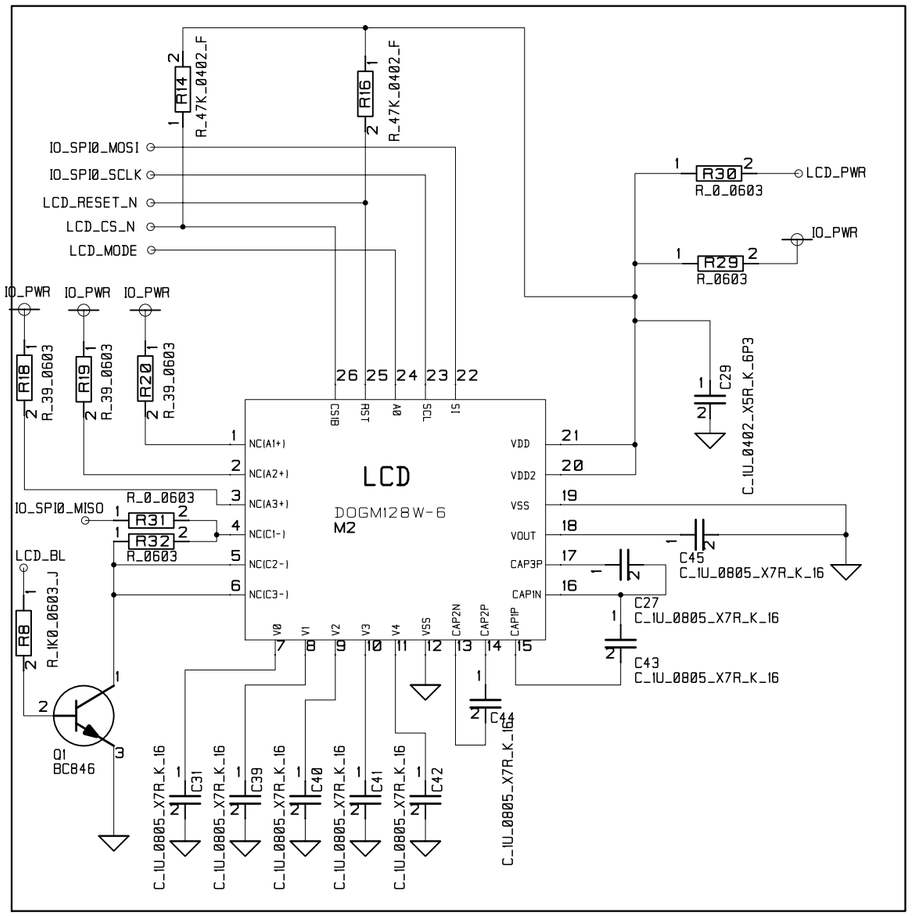

RESET BUTTONS

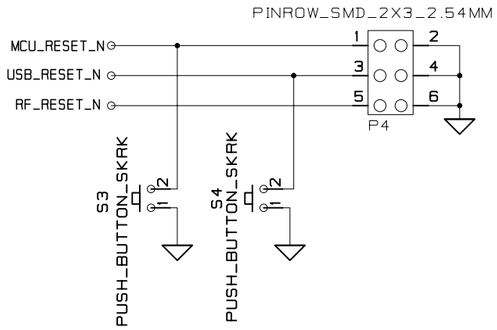

Hold Reset Settings:
MCU: 1-2
USB: 3-4
RF: 5-6

BUTTONS

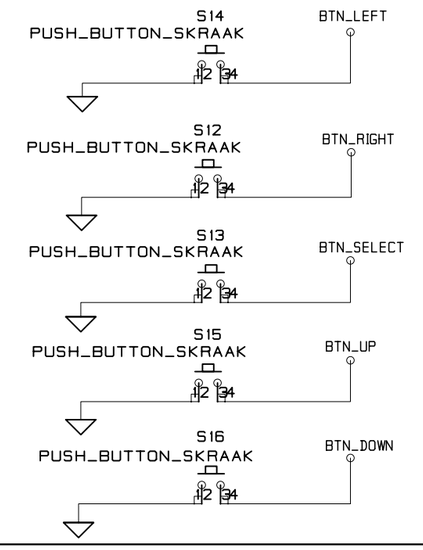

Q1,R8,R18,R19 and R20 Not Mounted when Backlight module (EA LED55x46) is not used, by default there will be no backlight module.

CONTRACT NO. XXX		COMPANY NAME TI Norway, LPW	
APPROVALS	DATE	DWG User Interface	
DRAWN	EIV OAT	SIZE A3	FSCM NO. / DWG NO. / REV. 1.5.0
CHECKED		SCALE	SHEET 6(7)
ISSUED			

EXTERNAL I/O

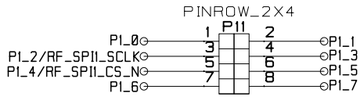

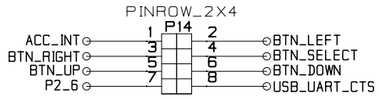

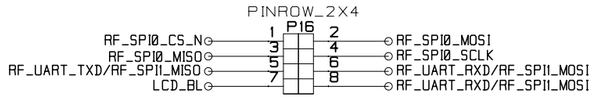

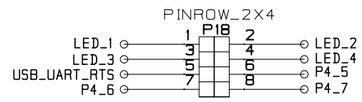

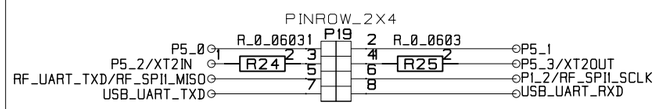

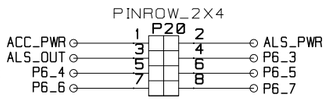

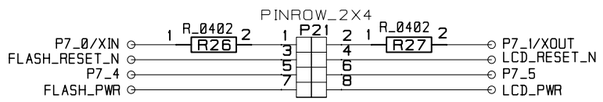

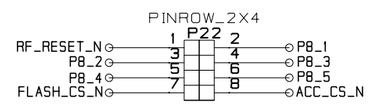

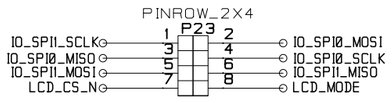

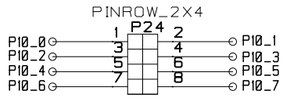

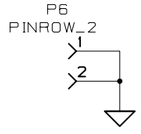

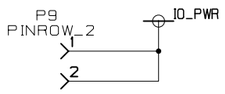

CONTRACT NO. XXX		COMPANY NAME TI Norway, LPW	
APPROVALS	DATE	DWG	
DRAWN	EIV OAT		
CHECKED		SIZE A3 / FSCM NO. / DWG NO. / REV. 1.5.0	
ISSUED		SCALE	SHEET 7 (7)

Appendix C

Schematics

SmartRF TrxEB 1.7.0

USB Interface

- CC2511
- CC2511 debug
- USB enable switch
- USB mode select switch
- USB port

IO_PWR
USB_VBUS
RF_UART_RXD/RF_SPI1_MOSI
P1_3
USB_UART_RTS
USB_UART_CTS
USB_UART_TXD
USB_UART_RXD
P1_7
MCU_RESET_N
RF_RESET_N
RF_SPI0_CS_N
RF_SPI0_SCLK
RF_SPI0_MOSI
RF_SPI0_MISO
USB_RESET_N

Sheet 2

EXT I/O

P1-P5

Sheet 7

P6-P10

Power Supply

- Power ON/OFF switch
- External power terminals
- Regulators
- Power jumpers
- Batteries

USB_VBUS
LCL_PWR
FET_PWR
RF_PWR
MCU_PWR
IO_PWR

Sheet 3

RF Interface

- RF connection

RF_PWR
P1_4/RF_SPI1_CS_N
P8_2
RF_UART_TXD/RF_SPI1_MISO
RF_UART_RXD/RF_SPI1_MOSI
P8_3
P1_2/RF_SPI1_SCLK
P8_4
P8_5
P1_0
P1_1
P1_5
RF_RESET_N
P1_7
P1_3
RF_SPI0_CS_N
RF_SPI0_SCLK
RF_SPI0_MOSI
RF_SPI0_MISO

Sheet 5

MCU

- MSP430F5438A
- JTAG
- XTAL

P1_0
P1_1
P1_2/RF_SPI1_SCLK
P1_3
P1_4/RF_SPI1_CS_N
P1_5
P1_6
P1_7
ACC_INT
BTN_LEFT
BTN_RIGHT
BTN_SELECT
BTN_UP
BTN_DOWN
P2_6
USB_UART_CTS
RF_SPI0_CS_N
RF_SPI0_MOSI
RF_SPI0_MISO
RF_SPI0_SCLK
RF_UART_TXD/RF_SPI1_MISO
RF_UART_RXD/RF_SPI1_MOSI
LCD_BL
LED_1
LED_2
LED_3
LED_4
USB_UART_RTS
P4_5
P4_6
P4_7

Sheet 4

FET_PWR
LCL_PWR
MCU_PWR
ALS_PWR
ACC_PWR
LCD_PWR
FLASH_PWR
USB_UART_TXD
USB_UART_RXD
FLASH_RESET_N
LCD_RESET_N
MCU_RESET_N
RF_RESET_N
P8_1
P8_2
P8_3
P8_4
P8_5
FLASH_CS_N
ACC_CS_N
IO_SPI1_SCLK
IO_SPI0_MOSI
IO_SPI0_MISO
IO_SPI0_SCLK
IO_SPI1_MOSI
IO_SPI1_MISO
LCD_CS_N
LCD_MODE
P10_0
P10_1
P10_2
P10_3
P10_4
P10_5
P10_6
P10_7

User Interface

- LCD
- External Flash
- LEDs
- Buttons
- Accelerometer
- Ambient Light Sensor
- Reset buttons

IO_SPI0_MOSI
IO_SPI0_MISO
IO_SPI0_SCLK
IO_SPI1_MOSI
IO_SPI1_MISO
IO_SPI1_SCLK
FLASH_CS_N
FLASH_PWR
FLASH_RESET_N
LCD_CS_N
LCD_MODE
LCD_BL
LCD_PWR
LCD_RESET_N
ACC_CS_N
ACC_INT
ALS_PWR
ALS_OUT
MCU_RESET_N
USB_RESET_N
RF_RESET_N
LED_1
LED_2
LED_3
LED_4
BTN_LEFT
BTN_RIGHT
BTN_SELECT
BTN_UP
BTN_DOWN

Sheet 6

FIDUCIAL_MARK FM1
FIDUCIAL_MARK FM3
FIDUCIAL_MARK FM5
FIDUCIAL_MARK FM4
FIDUCIAL_MARK FM6
FIDUCIAL_MARK FM2

CONTRACT NO. XXX		COMPANY NAME TI Norway, LPRF	
APPROVALS	DATE	DWG TrxEB Top Level	
DRAWN	MAW	SIZE A3	FSCM NO. / DWG NO. / REV. 1.7.0
CHECKED			
ISSUED		SCALE	SHEET 1(7)

USB SoC Debug

IO_PWR

P200
STL21
SMD_2x5_1.27MM

TESTPOINT T3 — USB_RESET_N
TESTPOINT T2
TESTPOINT T1

S2 — SMD_SWITCH_DPDT — USB_ENABLE
R_47K_0402_F R21
R_47K_0402_F R23

S1 — SMD_SWITCH_DPDT — USB_MODE
R_47K_0402_F R46
R_47K_0402_F R47

L4
L_BEAD_102_0402

C_100N_0402_X5R_K_10 C17
C_100N_0402_X5R_K_10 C18
C_1U_0402_X5R_K_6P3 C16
C_220P_0402_NP0_J_50 C33
C_100N_0402_X5R_K_10 C35
C_100N_0402_X5R_K_10 C36
C_220P_0402_NP0_J_50 C34
C_2U2_0603_X5R_K_10 C37

U3
CC2511

2	DVDD	AVDD	19
12	DVDD	AVDD	22
28	DGUARD	AVDD	25
29	AVDD_DREG	AVDD	26
30	DCOUPL		
14	P2_0	RF_P	23
15	P2_1	RF_N	24
16	P2_2		
4	P1_0/LED		
3	P1_1/LED		
1	P1_2		
36	P1_3		
35	P1_4		
34	P1_5		
33	P1_6	P2_3/XOSC32_Q1	17
32	P1_7	P2_4/XOSC32_Q2	18
5	P0_0/ATEST	XOSC_Q1	21
6	P0_1	XOSC_Q2	20
7	P0_2	RBIAS	27
8	P0_3		
9	P0_4		
13	P0_5		
10	PADP		
11	PADM		
31	RESET_N	GND Exposed	37

TP3 TESTPOINT_CIRCLE_40MILS — USB_DBG_DD, USB_DBG_DC
USB_PULLUP — P1_3
USB_ENABLE — P1_7
MCU_RESET_N, RF_RESET_N, RF_SPI0_CS_N, RF_SPI0_SCLK, RF_SPI0_MOSI, RF_SPI0_MISO

USB_MODE
TESTPOINT_CIRCLE_40MILS TP11 — USB_LED

USB LED
R_470_0402_F R43
D6 LED_EL19-21UYC_A2

U6
TS3A44159

USB_UART_RTS	13	NC1	
USB_UART_CTS	1	NC2	
USB_UART_TXD	5	NC3	
USB_UART_RXD	9	NC4	
P1_2/RF_SPI1_SCLK	11	NO1	COM1 12 CC2511_CTS
P1_4/RF_SPI1_CS_N	15	NO2	COM2 16 CC2511_RTS
RF_UART_RXD/RF_SPI1_MOSI	3	NO3	COM3 4 CC2511_RX
RF_UART_TXD/RF_SPI1_MISO	7	NO4	COM4 8 CC2511_TX
		V+	10
		IN1-2	14
		IN3-4	6
		GND	2

R_2K7_0402_F R22 — USB_RESET_N
C50 C_1N_0402_NP0_J_50

TESTPOINT_CIRCLE_40MILS TP12

X1
X_48.000/15/18/60/16
C20 C_33P_0402_NP0_J_50
C19 C_33P_0402_NP0_J_50
GND

R_56K_0402_F R44

P12
USB-B_MICRO

VBUS	1	USB_VBUS
D-	2	R_33_0402_G R12
D+	3	R_33_0402_G R11
ID	4	
GND	5	
Shield	6	
Shield	7	

USB_PULLUP
R_1K5_0402_G R9
C_47P_0402_NP0_J_50 C2
C_47P_0402_NP0_J_50 C3

CONTRACT NO.	XXX	COMPANY NAME	TI Norway, LPRF
APPROVALS	DATE	DWG	USB Interface
DRAWN	MAW	SIZE A3 / FSCM NO. / DWG NO. / REV.	1.7.0
CHECKED		SCALE	SHEET 2(7)
ISSUED			

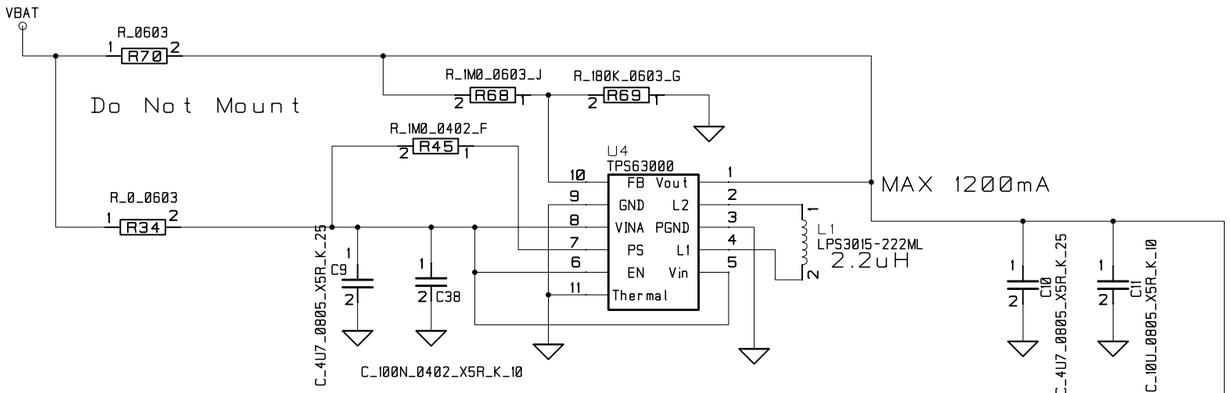

TPS63000 Feedback :
R68 - 1M0, R69 - 180K
TPS63001 Feedback :
R68 - 0, R69 - Not Mounted

RF_PWR jumper
PINROW_SMD_1X2_2.54MM
P15
RF_PWR

MCU_PWR jumper
PINROW_SMD_1X2_2.54MM
P13
MCU_PWR

IO_PWR jumper
PWR1
PINROW_SMD_1X2_2.54MM
P10
IO_PWR

Power On/Off
S5
SMD_SWITCH_DPDT
VBAT

EXTERNAL POWER
PINROW_SMD_1X2_2.54MM
P1

P17
VBAT_REG
VUSB_REG
VEXT
FET_PWR
LCL_PWR
PINROW_SMD_2X5_2.54MM

USB POWER
USB_VBUS
U2
TPS7A4501
In Out
SHDN ADJ
Gnd Gnd
C1
C_10U_0805_X5R_K_16
R63
R_6K2_0603_G
R64
R_3K6_0603_G
C8
C_10U_0805_X5R_K_10

Battery
1XAA_1_5V
B3
1XAA_1_5V
B4

Power Jumper Settings:

Battery : 1-2 & 9-10
USB : 3-4 & 9-10
EXTERNAL: 5-6 & 9-10
FET_PWR : 7-8, (Disconnect 9-10)

CONTRACT NO. XXX		COMPANY NAME TI Norway, LPRF			
APPROVALS	DATE	DWG Power Supply			
DRAWN	MAW				
CHECKED		SIZE A3	FSCM NO.	DWG NO.	REV. 1.7.0
ISSUED		SCALE			SHEET 3(7)

Ext. Osc.
Not mounted !

P5
PINROW_1X3
P5_3/XT2OUT
P5_2/XT2IN
C47
C6
C_22P_0402_NP0_J_50
C_22P_0402_NP0_J_50

JTAG
P3
FET_PWR
LCL_PWR

C4
C_2N2_0603_X7R_K_50
R3
R_47K_0402_F
DVCC

TEST POINTS
ACLK — TESTPIN_SMALL TP5
MCLK — TESTPIN_SMALL TP6
SMCLK — TESTPIN_SMALL TP7
VCORE — TESTPIN_SMALL TP8
TESTPOINT_PAD TP1
TESTPOINT_PAD TP2

MCU_RESET_N

C5
C_100N_0402_X5R_K_10
DVCC

PINROW_SMD_2X7_2.54MM_DEBUG

MCU_PWR
R1
R_10_0402_J
AVCC
R4
R_0_0402
DVCC
C7
C_4U7_0603_X5R_K_6
C12
C_4U7_0603_X5R_K_6
C13
C_100N_0402_X5R_K_10
P5_1
C48
C_0603
P5_0
C14
C_0603

X_32.768/20/50/40/12_50
X2
C_15P_0402_NP0_J_50
C25
C24
C_15P_0402_NP0_J_50
C23
C_100N_0402_X5R_K_10
DVCC

P7_0/XIN
P7_1/XOUT
P1_0
P1_1
P1_2/RF_SPI1_SCLK
P1_3
P1_4/RF_SPI1_CS_N
P1_5
P1_6
P1_7
ACC_INT

P6_4
P6_5
P6_6
P6_7
P7_4
P7_5
FLASH_PWR
LCD_PWR

MSP430F5438AIPZ
U1

P6.4/A4
P6.5/A5
P6.6/A6
P6.7/A7
P7.4/A12
P7.5/A13
P7.6/A14
P7.7/A15
P5.0/VREF+/VEREF+
P5.1/VREF-/VEREF-
AVCC
AVSS
P7.0/XIN
P7.1/XOUT
DVSS1
DVCC1
P1.0/TA0CLK/ACLK
P1.1/TA0.0
P1.2/TA0.1
P1.3/TA0.2
P1.4/TA0.3
P1.5/TA0.4
P1.6/SMCLK
P1.7
P2.0/TA1CLK/MCLK

P6_3 ALS_OUT ALS_PWR ACC_PWR TCK TMS TDI TDO TEST P5_3/XT2OUT P5_2/XT2IN SMCLK MCLK ACLK P10_7 P10_6 P10_5 P10_4 P10_3 P10_2 P10_1 P10_0

P6.3/A3
P6.2/A2
P6.1/A1
P6.0/A0
/RST/NMI/SBWTDIO
PJ.3/TCK
PJ.2/TMS
PJ.1/TDI/TCLK
PJ.0/TDO
TEST/SBWTCK
P5.3/XT2OUT
P5.2/XT2IN
DVSS4
DVCC4
P11.2/SMCLK
P11.1/MCLK
P11.0/ACLK
P10.7
P10.6
P10.5/UCA3RXDUCA3SOMI
P10.4/UCA3TXD/UCA3SIMO
P10.3/UCB3CLK/UCA3STE
P10.2/UCB3SOMI/UCB3SCL
P10.1/UCB3SIMO/UCB3SDA
P10.0/UCB3STE/UCA3CLK

P9.7
P9.6
P9.5/UCA2RXDUCA2SOMI
P9.4/UCA2TXD/UCA2SIMO
P9.3/UCB2CLK/UCA2STE
P9.2/UCB2SOMI/UCB2SCL
P9.1/UCB2SIMO/UCB2SDA
P9.0/UCB2STE/UCA2CLK
P8.7
P8.6/TA1.1
P8.5/TA1.0
DVCC2
DVSS2
VCORE
P8.4/TA0.4
P8.3/TA0.3
P8.2/TA0.2
P8.1/TA0.1
P8.0/TA0.0
P7.3/TA1.2
P7.2/TB0OUTH/SVMOUT
P5.7/UCA1RXD/UCA1SOMI
P5.6/UCA1TXD/UCA1SIMO
P5.5/UCB1CLK/UCA1STE
P5.4/UCB1SOMI/UCB1SCL

75 LCD_MODE
74 LCD_CS_N
73 IO_SPI1_MISO
72 IO_SPI1_MOSI
71 IO_SPI0_SCLK
70 IO_SPI0_MISO
69 IO_SPI0_MOSI
68 IO_SPI1_SCLK
67 ACC_CS_N
66 FLASH_CS_N
65 P8_5
64
63
62 VCORE
61 P8_4
60 P8_3
59 P8_2
58 P8_1
57 RF_RESET_N
56 LCD_RESET_N
55 FLASH_RESET_N
54 USB_UART_RXD
53 USB_UART_TXD
52 P1_2/RF_SPI1_SCLK
51 RF_UART_TXD/RF_SPI1_MISO

DVCC
C22
C_100N_0402_X5R_K_10
C21
C_4U7_0603_X5R_K_6

BTN_LEFT
BTN_RIGHT
BTN_SELECT
BTN_UP
BTN_DOWN
P2_6
USB_UART_CTS
RF_SPI0_CS_N
RF_SPI0_MOSI
RF_SPI0_MISO
RF_SPI0_SCLK
RF_UART_TXD/RF_SPI1_MISO
RF_UART_RXD/RF_SPI1_MOSI
LCD_BL
RF_UART_RXD/RF_SPI1_MOSI
LED_1
LED_2
LED_3
LED_4
USB_UART_RTS
P4_5
P4_6
P4_7

DVCC
C15
C_100N_0402_X5R_K_10

CONTRACT NO. XXX		COMPANY NAME TI Norway, LPRF	
APPROVALS	DATE	DWG Application MCU	
DRAWN	MAW	SIZE A3	FSCM NO. / DWG NO. / REV. 1.7.0
CHECKED		SCALE	SHEET 4(7)
ISSUED			

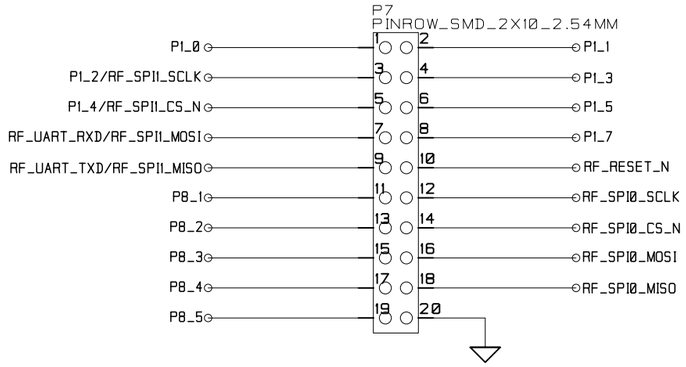

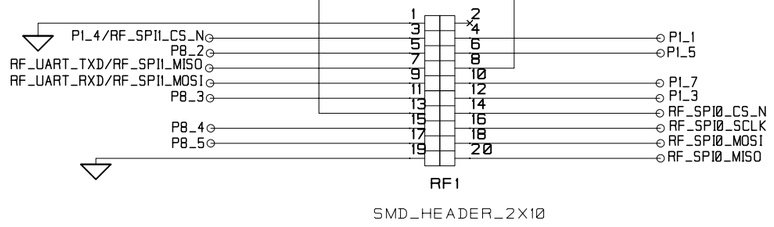

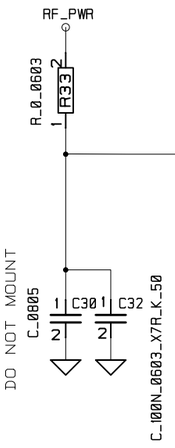

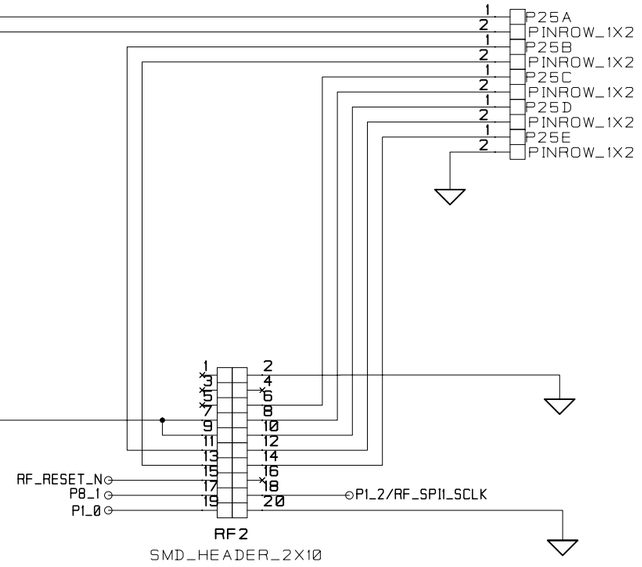

Connectors RF1 and RF2 are SMD,
2x10 pin row headers with 0.05 spacing.
P/N TFM-110-02-SM-D-A-K, produced by Samtec.

The matching connector used on RF
evaluation modules are SFM-110-02-SM-D-A-K.

The distance between RF1 and RF2 is 1200 mils
(center to center).

CONTRACT NO. XXX		COMPANY NAME TI Norway, LPRF		
APPROVALS	DATE	DWG EM Interface		
DRAWN	MAW			
CHECKED		SIZE A3	FSCM NO.	DWG NO. / REV. 1.7.0
ISSUED		SCALE		SHEET 5(7)

EXTERNAL FLASH

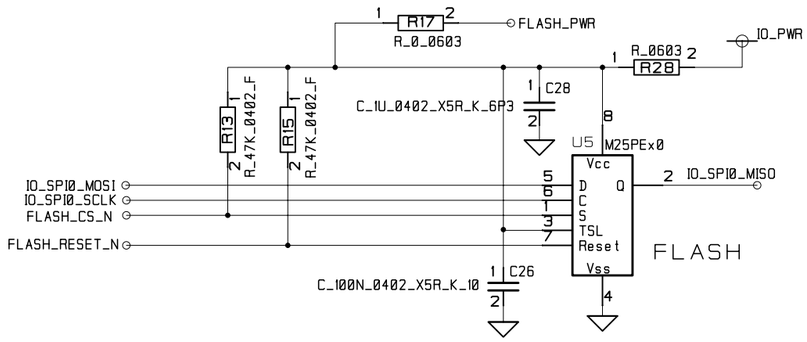

ACCELEROMETER

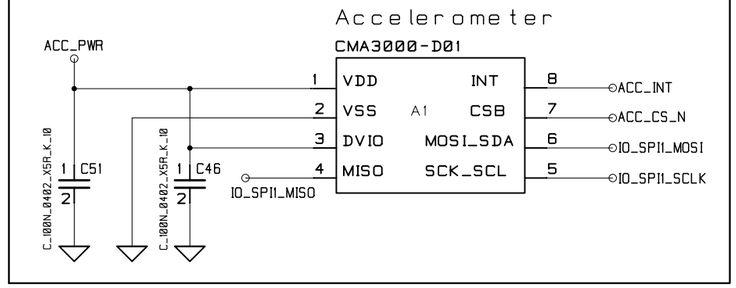

LEDS

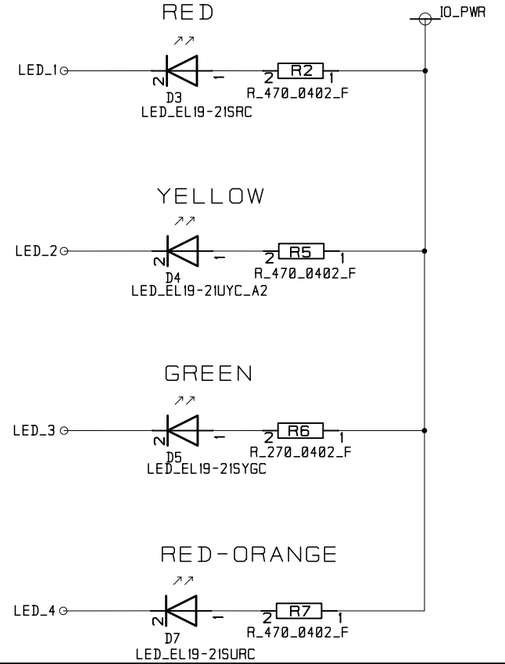

AMBIENT LIGHT SENSOR

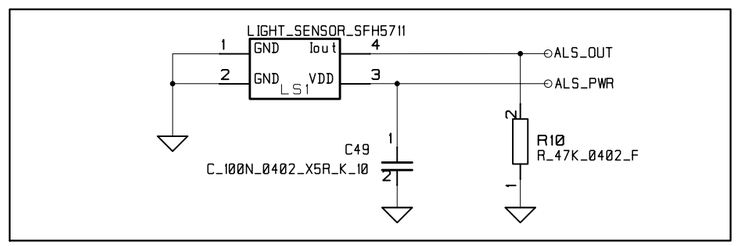

LCD

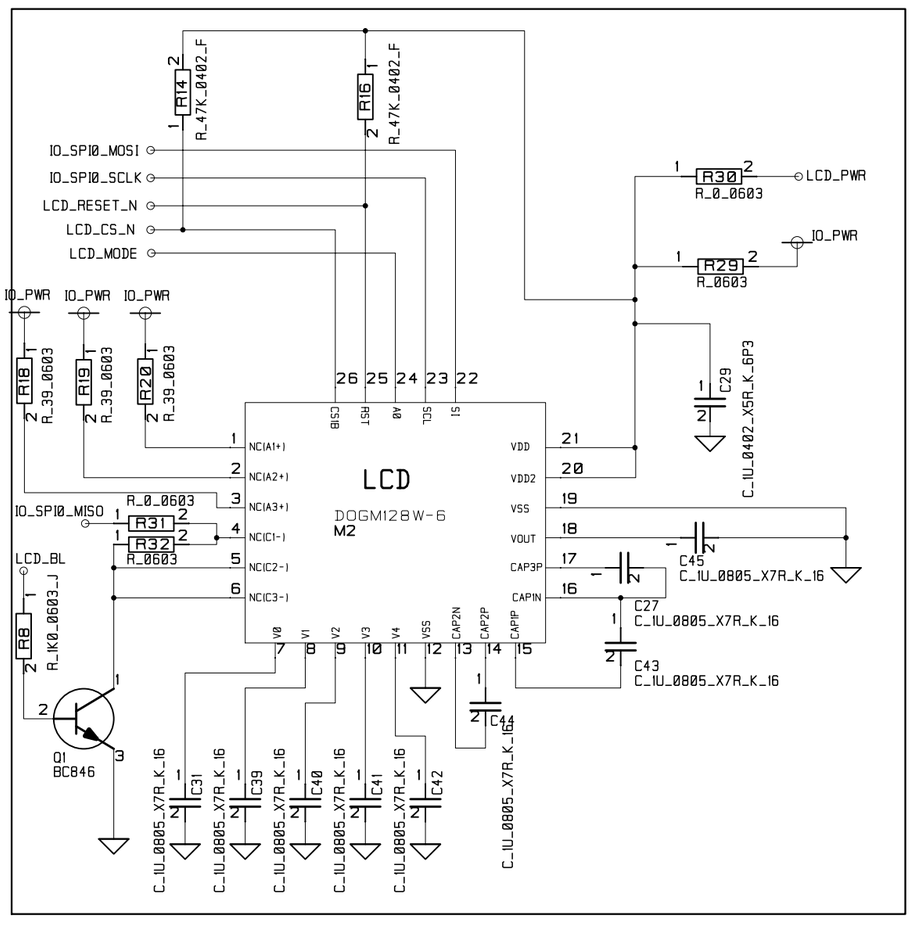

RESET BUTTONS

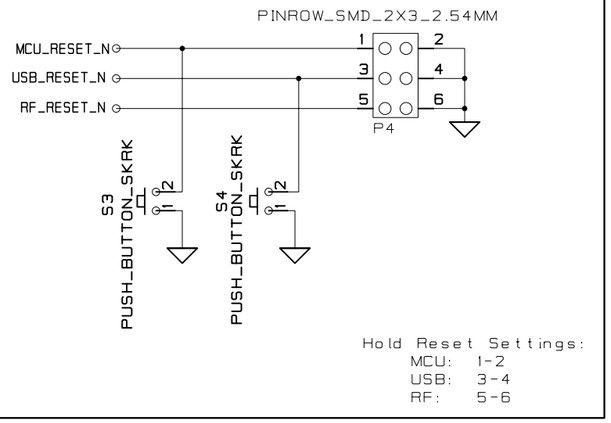

BUTTONS

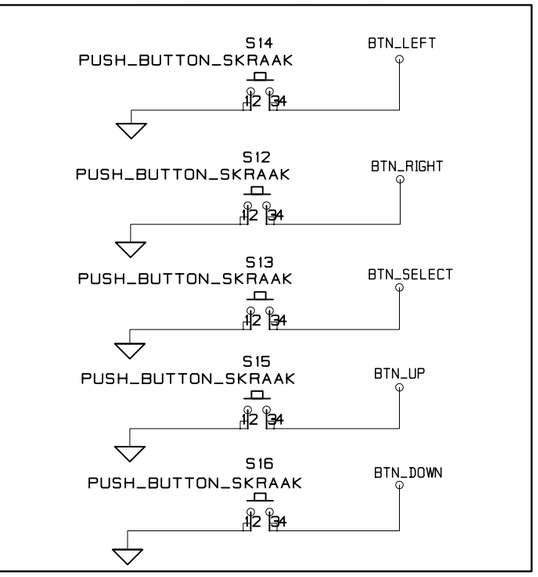

Q1,R8,R18,R19 and R20 Not Mounted when Backlight module (EA LED55x46) is not used, by default there will be no backlight module.

CONTRACT NO. XXX		COMPANY NAME TI Norway, LPRF	
APPROVALS	DATE	DWG User Interface	
DRAWN	MAW		
CHECKED		SIZE A3	FSCM NO. / DWG NO. / REV. 1.7.0
ISSUED		SCALE	SHEET 6(7)

EXTERNAL I/O

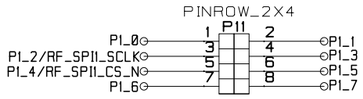

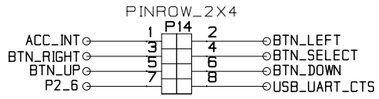

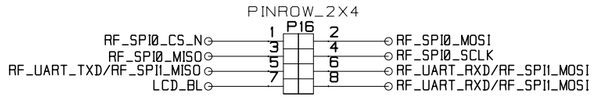

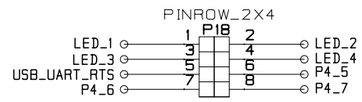

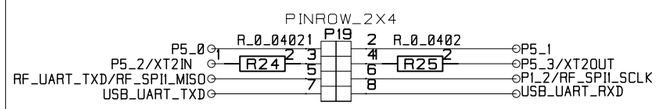

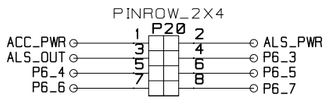

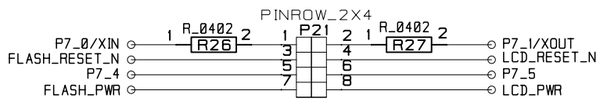

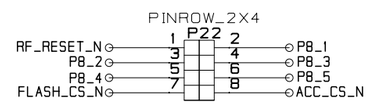

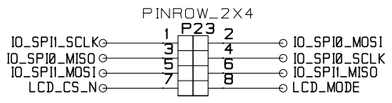

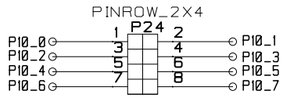

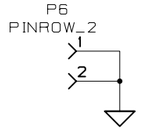

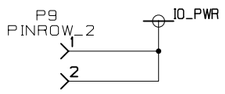

CONTRACT NO. XXX		COMPANY NAME TI Norway, LPRF	
APPROVALS	DATE	DWG	
DRAWN	MAW		
CHECKED		SIZE A3	FSCM NO. / DWG NO. / REV. 1.7.0
ISSUED		SCALE	SHEET 7 (7)

STANDARD TERMS FOR EVALUATION MODULES

1. *Delivery:* TI delivers TI evaluation boards, kits, or modules, including any accompanying demonstration software, components, and/or documentation which may be provided together or separately (collectively, an “EVM” or “EVMs”) to the User (“User”) in accordance with the terms set forth herein. User's acceptance of the EVM is expressly subject to the following terms.

   1.1 EVMs are intended solely for product or software developers for use in a research and development setting to facilitate feasibility evaluation, experimentation, or scientific analysis of TI semiconductors products. EVMs have no direct function and are not finished products. EVMs shall not be directly or indirectly assembled as a part or subassembly in any finished product. For clarification, any software or software tools provided with the EVM (“Software”) shall not be subject to the terms and conditions set forth herein but rather shall be subject to the applicable terms that accompany such Software

   1.2 EVMs are not intended for consumer or household use. EVMs may not be sold, sublicensed, leased, rented, loaned, assigned, or otherwise distributed for commercial purposes by Users, in whole or in part, or used in any finished product or production system.

2 *Limited Warranty and Related Remedies/Disclaimers*:

   2.1 These terms do not apply to Software. The warranty, if any, for Software is covered in the applicable Software License Agreement.

   2.2 TI warrants that the TI EVM will conform to TI's published specifications for ninety (90) days after the date TI delivers such EVM to User. Notwithstanding the foregoing, TI shall not be liable for a nonconforming EVM if (a) the nonconformity was caused by neglect, misuse or mistreatment by an entity other than TI, including improper installation or testing, or for any EVMs that have been altered or modified in any way by an entity other than TI, (b) the nonconformity resulted from User's design, specifications or instructions for such EVMs or improper system design, or (c) User has not paid on time. Testing and other quality control techniques are used to the extent TI deems necessary. TI does not test all parameters of each EVM. User's claims against TI under this Section 2 are void if User fails to notify TI of any apparent defects in the EVMs within ten (10) business days after delivery, or of any hidden defects with ten (10) business days after the defect has been detected.

   2.3 TI's sole liability shall be at its option to repair or replace EVMs that fail to conform to the warranty set forth above, or credit User's account for such EVM. TI's liability under this warranty shall be limited to EVMs that are returned during the warranty period to the address designated by TI and that are determined by TI not to conform to such warranty. If TI elects to repair or replace such EVM, TI shall have a reasonable time to repair such EVM or provide replacements. Repaired EVMs shall be warranted for the remainder of the original warranty period. Replaced EVMs shall be warranted for a new full ninety (90) day warranty period.

WARNING

Evaluation Kits are intended solely for use by technically qualified, professional electronics experts who are familiar with the dangers and application risks associated with handling electrical mechanical components, systems, and subsystems.

User shall operate the Evaluation Kit within TI’s recommended guidelines and any applicable legal or environmental requirements as well as reasonable and customary safeguards. Failure to set up and/or operate the Evaluation Kit within TI’s recommended guidelines may result in personal injury or death or property damage. Proper set up entails following TI’s instructions for electrical ratings of interface circuits such as input, output and electrical loads.

NOTE:

EXPOSURE TO ELECTROSTATIC DISCHARGE (ESD) MAY CAUSE DEGREDATION OR FAILURE OF THE EVALUATION KIT; TI RECOMMENDS STORAGE OF THE EVALUATION KIT IN A PROTECTIVE ESD BAG.

3 *Regulatory Notices:*

3.1 *United States*

3.1.1 *Notice applicable to EVMs not FCC-Approved:*

FCC NOTICE: This kit is designed to allow product developers to evaluate electronic components, circuitry, or software associated with the kit to determine whether to incorporate such items in a finished product and software developers to write software applications for use with the end product. This kit is not a finished product and when assembled may not be resold or otherwise marketed unless all required FCC equipment authorizations are first obtained. Operation is subject to the condition that this product not cause harmful interference to licensed radio stations and that this product accept harmful interference. Unless the assembled kit is designed to operate under part 15, part 18 or part 95 of this chapter, the operator of the kit must operate under the authority of an FCC license holder or must secure an experimental authorization under part 5 of this chapter.

3.1.2 *For EVMs annotated as FCC – FEDERAL COMMUNICATIONS COMMISSION Part 15 Compliant:*

CAUTION

This device complies with part 15 of the FCC Rules. Operation is subject to the following two conditions: (1) This device may not cause harmful interference, and (2) this device must accept any interference received, including interference that may cause undesired operation.

Changes or modifications not expressly approved by the party responsible for compliance could void the user's authority to operate the equipment.

FCC Interference Statement for Class A EVM devices

NOTE: This equipment has been tested and found to comply with the limits for a Class A digital device, pursuant to part 15 of the FCC Rules. These limits are designed to provide reasonable protection against harmful interference when the equipment is operated in a commercial environment. This equipment generates, uses, and can radiate radio frequency energy and, if not installed and used in accordance with the instruction manual, may cause harmful interference to radio communications. Operation of this equipment in a residential area is likely to cause harmful interference in which case the user will be required to correct the interference at his own expense.

FCC Interference Statement for Class B EVM devices

NOTE: This equipment has been tested and found to comply with the limits for a Class B digital device, pursuant to part 15 of the FCC Rules. These limits are designed to provide reasonable protection against harmful interference in a residential installation. This equipment generates, uses and can radiate radio frequency energy and, if not installed and used in accordance with the instructions, may cause harmful interference to radio communications. However, there is no guarantee that interference will not occur in a particular installation. If this equipment does cause harmful interference to radio or television reception, which can be determined by turning the equipment off and on, the user is encouraged to try to correct the interference by one or more of the following measures:

- *Reorient or relocate the receiving antenna.*
- *Increase the separation between the equipment and receiver.*
- *Connect the equipment into an outlet on a circuit different from that to which the receiver is connected.*
- *Consult the dealer or an experienced radio/TV technician for help.*

3.2 *Canada*

3.2.1 *For EVMs issued with an Industry Canada Certificate of Conformance to RSS-210 or RSS-247*

Concerning EVMs Including Radio Transmitters:

This device complies with Industry Canada license-exempt RSSs. Operation is subject to the following two conditions:

(1) this device may not cause interference, and (2) this device must accept any interference, including interference that may cause undesired operation of the device.

Concernant les EVMs avec appareils radio:

Le présent appareil est conforme aux CNR d'Industrie Canada applicables aux appareils radio exempts de licence. L'exploitation est autorisée aux deux conditions suivantes: (1) l'appareil ne doit pas produire de brouillage, et (2) l'utilisateur de l'appareil doit accepter tout brouillage radioélectrique subi, même si le brouillage est susceptible d'en compromettre le fonctionnement.

Concerning EVMs Including Detachable Antennas:

Under Industry Canada regulations, this radio transmitter may only operate using an antenna of a type and maximum (or lesser) gain approved for the transmitter by Industry Canada. To reduce potential radio interference to other users, the antenna type and its gain should be so chosen that the equivalent isotropically radiated power (e.i.r.p.) is not more than that necessary for successful communication. This radio transmitter has been approved by Industry Canada to operate with the antenna types listed in the user guide with the maximum permissible gain and required antenna impedance for each antenna type indicated. Antenna types not included in this list, having a gain greater than the maximum gain indicated for that type, are strictly prohibited for use with this device.

Concernant les EVMs avec antennes détachables

Conformément à la réglementation d'Industrie Canada, le présent émetteur radio peut fonctionner avec une antenne d'un type et d'un gain maximal (ou inférieur) approuvé pour l'émetteur par Industrie Canada. Dans le but de réduire les risques de brouillage radioélectrique à l'intention des autres utilisateurs, il faut choisir le type d'antenne et son gain de sorte que la puissance isotrope rayonnée équivalente (p.i.r.e.) ne dépasse pas l'intensité nécessaire à l'établissement d'une communication satisfaisante. Le présent émetteur radio a été approuvé par Industrie Canada pour fonctionner avec les types d'antenne énumérés dans le manuel d'usage et ayant un gain admissible maximal et l'impédance requise pour chaque type d'antenne. Les types d'antenne non inclus dans cette liste, ou dont le gain est supérieur au gain maximal indiqué, sont strictement interdits pour l'exploitation de l'émetteur

3.3 *Japan*

3.3.1 *Notice for EVMs delivered in Japan:* Please see http://www.tij.co.jp/lsds/ti_ja/general/eStore/notice_01.page 日本国内に輸入される評価用キット、ボードについては、次のところをご覧ください。

https://www.ti.com/ja-jp/legal/notice-for-evaluation-kits-delivered-in-japan.html

3.3.2 *Notice for Users of EVMs Considered "Radio Frequency Products" in Japan:* EVMs entering Japan may not be certified by TI as conforming to Technical Regulations of Radio Law of Japan.

If User uses EVMs in Japan, not certified to Technical Regulations of Radio Law of Japan, User is required to follow the instructions set forth by Radio Law of Japan, which includes, but is not limited to, the instructions below with respect to EVMs (which for the avoidance of doubt are stated strictly for convenience and should be verified by User):

1. Use EVMs in a shielded room or any other test facility as defined in the notification #173 issued by Ministry of Internal Affairs and Communications on March 28, 2006, based on Sub-section 1.1 of Article 6 of the Ministry's Rule for Enforcement of Radio Law of Japan,
2. Use EVMs only after User obtains the license of Test Radio Station as provided in Radio Law of Japan with respect to EVMs, or
3. Use of EVMs only after User obtains the Technical Regulations Conformity Certification as provided in Radio Law of Japan with respect to EVMs. Also, do not transfer EVMs, unless User gives the same notice above to the transferee. Please note that if User does not follow the instructions above, User will be subject to penalties of Radio Law of Japan.

【無線電波を送信する製品の開発キットをお使いになる際の注意事項】 開発キットの中には技術基準適合証明を受けていないものがあります。 技術適合証明を受けていないもののご使用に際しては、電波法遵守のため、以下のいずれかの措置を取っていただく必要がありますのでご注意ください。

1. 電波法施行規則第6条第1項第1号に基づく平成18年3月28日総務省告示第173号で定められた電波暗室等の試験設備でご使用いただく。
2. 実験局の免許を取得後ご使用いただく。
3. 技術基準適合証明を取得後ご使用いただく。

なお、本製品は、上記の「ご使用にあたっての注意」を譲渡先、移転先に通知しない限り、譲渡、移転できないものとします。

上記を遵守頂けない場合は、電波法の罰則が適用される可能性があることをご留意ください。 日本テキサス・インスツルメンツ株式会社

東京都新宿区西新宿 6 丁目 2 4 番 1 号

西新宿三井ビル

3.3.3 *Notice for EVMs for Power Line Communication:* Please see http://www.tij.co.jp/lsds/ti_ja/general/eStore/notice_02.page

電力線搬送波通信についての開発キットをお使いになる際の注意事項については、次のところをご覧ください。https://www.ti.com/ja-jp/legal/notice-for-evaluation-kits-for-power-line-communication.html

3.4 *European Union*

3.4.1 *For EVMs subject to EU Directive 2014/30/EU (Electromagnetic Compatibility Directive)*:

This is a class A product intended for use in environments other than domestic environments that are connected to a low-voltage power-supply network that supplies buildings used for domestic purposes. In a domestic environment this product may cause radio interference in which case the user may be required to take adequate measures.

4 *EVM Use Restrictions and Warnings:*

4.1 EVMS ARE NOT FOR USE IN FUNCTIONAL SAFETY AND/OR SAFETY CRITICAL EVALUATIONS, INCLUDING BUT NOT LIMITED TO EVALUATIONS OF LIFE SUPPORT APPLICATIONS.

4.2 User must read and apply the user guide and other available documentation provided by TI regarding the EVM prior to handling or using the EVM, including without limitation any warning or restriction notices. The notices contain important safety information related to, for example, temperatures and voltages.

4.3 *Safety-Related Warnings and Restrictions:*

4.3.1 User shall operate the EVM within TI's recommended specifications and environmental considerations stated in the user guide, other available documentation provided by TI, and any other applicable requirements and employ reasonable and customary safeguards. Exceeding the specified performance ratings and specifications (including but not limited to input and output voltage, current, power, and environmental ranges) for the EVM may cause personal injury or death, or property damage. If there are questions concerning performance ratings and specifications, User should contact a TI field representative prior to connecting interface electronics including input power and intended loads. Any loads applied outside of the specified output range may also result in unintended and/or inaccurate operation and/or possible permanent damage to the EVM and/or interface electronics. Please consult the EVM user guide prior to connecting any load to the EVM output. If there is uncertainty as to the load specification, please contact a TI field representative. During normal operation, even with the inputs and outputs kept within the specified allowable ranges, some circuit components may have elevated case temperatures. These components include but are not limited to linear regulators, switching transistors, pass transistors, current sense resistors, and heat sinks, which can be identified using the information in the associated documentation. When working with the EVM, please be aware that the EVM may become very warm.

4.3.2 EVMs are intended solely for use by technically qualified, professional electronics experts who are familiar with the dangers and application risks associated with handling electrical mechanical components, systems, and subsystems. User assumes all responsibility and liability for proper and safe handling and use of the EVM by User or its employees, affiliates, contractors or designees. User assumes all responsibility and liability to ensure that any interfaces (electronic and/or mechanical) between the EVM and any human body are designed with suitable isolation and means to safely limit accessible leakage currents to minimize the risk of electrical shock hazard. User assumes all responsibility and liability for any improper or unsafe handling or use of the EVM by User or its employees, affiliates, contractors or designees.

4.4 User assumes all responsibility and liability to determine whether the EVM is subject to any applicable international, federal, state, or local laws and regulations related to User's handling and use of the EVM and, if applicable, User assumes all responsibility and liability for compliance in all respects with such laws and regulations. User assumes all responsibility and liability for proper disposal and recycling of the EVM consistent with all applicable international, federal, state, and local requirements.

5. *Accuracy of Information:* To the extent TI provides information on the availability and function of EVMs, TI attempts to be as accurate as possible. However, TI does not warrant the accuracy of EVM descriptions, EVM availability or other information on its websites as accurate, complete, reliable, current, or error-free.

6. *Disclaimers:*

6.1 EXCEPT AS SET FORTH ABOVE, EVMS AND ANY MATERIALS PROVIDED WITH THE EVM (INCLUDING, BUT NOT LIMITED TO, REFERENCE DESIGNS AND THE DESIGN OF THE EVM ITSELF) ARE PROVIDED "AS IS" AND "WITH ALL FAULTS." TI DISCLAIMS ALL OTHER WARRANTIES, EXPRESS OR IMPLIED, REGARDING SUCH ITEMS, INCLUDING BUT NOT LIMITED TO ANY EPIDEMIC FAILURE WARRANTY OR IMPLIED WARRANTIES OF MERCHANTABILITY OR FITNESS FOR A PARTICULAR PURPOSE OR NON-INFRINGEMENT OF ANY THIRD PARTY PATENTS, COPYRIGHTS, TRADE SECRETS OR OTHER INTELLECTUAL PROPERTY RIGHTS.

6.2 EXCEPT FOR THE LIMITED RIGHT TO USE THE EVM SET FORTH HEREIN, NOTHING IN THESE TERMS SHALL BE CONSTRUED AS GRANTING OR CONFERRING ANY RIGHTS BY LICENSE, PATENT, OR ANY OTHER INDUSTRIAL OR INTELLECTUAL PROPERTY RIGHT OF TI, ITS SUPPLIERS/LICENSORS OR ANY OTHER THIRD PARTY, TO USE THE EVM IN ANY FINISHED END-USER OR READY-TO-USE FINAL PRODUCT, OR FOR ANY INVENTION, DISCOVERY OR IMPROVEMENT, REGARDLESS OF WHEN MADE, CONCEIVED OR ACQUIRED.

7. *USER'S INDEMNITY OBLIGATIONS AND REPRESENTATIONS.* USER WILL DEFEND, INDEMNIFY AND HOLD TI, ITS LICENSORS AND THEIR REPRESENTATIVES HARMLESS FROM AND AGAINST ANY AND ALL CLAIMS, DAMAGES, LOSSES, EXPENSES, COSTS AND LIABILITIES (COLLECTIVELY, "CLAIMS") ARISING OUT OF OR IN CONNECTION WITH ANY HANDLING OR USE OF THE EVM THAT IS NOT IN ACCORDANCE WITH THESE TERMS. THIS OBLIGATION SHALL APPLY WHETHER CLAIMS ARISE UNDER STATUTE, REGULATION, OR THE LAW OF TORT, CONTRACT OR ANY OTHER LEGAL THEORY, AND EVEN IF THE EVM FAILS TO PERFORM AS DESCRIBED OR EXPECTED.

8. *Limitations on Damages and Liability:*

   8.1 *General Limitations*. IN NO EVENT SHALL TI BE LIABLE FOR ANY SPECIAL, COLLATERAL, INDIRECT, PUNITIVE, INCIDENTAL, CONSEQUENTIAL, OR EXEMPLARY DAMAGES IN CONNECTION WITH OR ARISING OUT OF THESE TERMS OR THE USE OF THE EVMS , REGARDLESS OF WHETHER TI HAS BEEN ADVISED OF THE POSSIBILITY OF SUCH DAMAGES. EXCLUDED DAMAGES INCLUDE, BUT ARE NOT LIMITED TO, COST OF REMOVAL OR REINSTALLATION, ANCILLARY COSTS TO THE PROCUREMENT OF SUBSTITUTE GOODS OR SERVICES, RETESTING, OUTSIDE COMPUTER TIME, LABOR COSTS, LOSS OF GOODWILL, LOSS OF PROFITS, LOSS OF SAVINGS, LOSS OF USE, LOSS OF DATA, OR BUSINESS INTERRUPTION. NO CLAIM, SUIT OR ACTION SHALL BE BROUGHT AGAINST TI MORE THAN TWELVE (12) MONTHS AFTER THE EVENT THAT GAVE RISE TO THE CAUSE OF ACTION HAS OCCURRED.

   8.2 *Specific Limitations.* IN NO EVENT SHALL TI'S AGGREGATE LIABILITY FROM ANY USE OF AN EVM PROVIDED HEREUNDER, INCLUDING FROM ANY WARRANTY, INDEMITY OR OTHER OBLIGATION ARISING OUT OF OR IN CONNECTION WITH THESE TERMS, , EXCEED THE TOTAL AMOUNT PAID TO TI BY USER FOR THE PARTICULAR EVM(S) AT ISSUE DURING THE PRIOR TWELVE (12) MONTHS WITH RESPECT TO WHICH LOSSES OR DAMAGES ARE CLAIMED. THE EXISTENCE OF MORE THAN ONE CLAIM SHALL NOT ENLARGE OR EXTEND THIS LIMIT.

9. *Return Policy.* Except as otherwise provided, TI does not offer any refunds, returns, or exchanges. Furthermore, no return of EVM(s) will be accepted if the package has been opened and no return of the EVM(s) will be accepted if they are damaged or otherwise not in a resalable condition. If User feels it has been incorrectly charged for the EVM(s) it ordered or that delivery violates the applicable order, User should contact TI. All refunds will be made in full within thirty (30) working days from the return of the components(s), excluding any postage or packaging costs.

10. *Governing Law:* These terms and conditions shall be governed by and interpreted in accordance with the laws of the State of Texas, without reference to conflict-of-laws principles. User agrees that non-exclusive jurisdiction for any dispute arising out of or relating to these terms and conditions lies within courts located in the State of Texas and consents to venue in Dallas County, Texas. Notwithstanding the foregoing, any judgment may be enforced in any United States or foreign court, and TI may seek injunctive relief in any United States or foreign court.

Mailing Address: Texas Instruments, Post Office Box 655303, Dallas, Texas 75265
Copyright © 2023, Texas Instruments Incorporated

IMPORTANT NOTICE AND DISCLAIMER

TI PROVIDES TECHNICAL AND RELIABILITY DATA (INCLUDING DATASHEETS), DESIGN RESOURCES (INCLUDING REFERENCE DESIGNS), APPLICATION OR OTHER DESIGN ADVICE, WEB TOOLS, SAFETY INFORMATION, AND OTHER RESOURCES “AS IS” AND WITH ALL FAULTS, AND DISCLAIMS ALL WARRANTIES, EXPRESS AND IMPLIED, INCLUDING WITHOUT LIMITATION ANY IMPLIED WARRANTIES OF MERCHANTABILITY, FITNESS FOR A PARTICULAR PURPOSE OR NON-INFRINGEMENT OF THIRD PARTY INTELLECTUAL PROPERTY RIGHTS.

These resources are intended for skilled developers designing with TI products. You are solely responsible for (1) selecting the appropriate TI products for your application, (2) designing, validating and testing your application, and (3) ensuring your application meets applicable standards, and any other safety, security, regulatory or other requirements.

These resources are subject to change without notice. TI grants you permission to use these resources only for development of an application that uses the TI products described in the resource. Other reproduction and display of these resources is prohibited. No license is granted to any other TI intellectual property right or to any third party intellectual property right. TI disclaims responsibility for, and you fully indemnify TI and its representatives against any claims, damages, costs, losses, and liabilities arising out of your use of these resources.

TI’s products are provided subject to TI’s Terms of Sale, TI’s General Quality Guidelines, or other applicable terms available either on ti.com or provided in conjunction with such TI products. TI’s provision of these resources does not expand or otherwise alter TI’s applicable warranties or warranty disclaimers for TI products. Unless TI explicitly designates a product as custom or customer-specified, TI products are standard, catalog, general purpose devices.

TI objects to and rejects any additional or different terms you may propose.

Copyright © 2026, Texas Instruments Incorporated

Last updated 10/2025