Stellaris® LM3S3748 Evaluation Kit

User's Manual

EK-LM3S3748-05

Copyright © 2008–2010 Texas Instruments

Copyright

Copyright © 2008–2010 Texas Instruments, Inc. All rights reserved. Stellaris and StellarisWare are registered trademarks of Texas Instruments. ARM and Thumb are registered trademarks, and Cortex is a trademark of ARM Limited. Other names and brands may be claimed as the property of others.

Texas Instruments
108 Wild Basin, Suite 350
Austin, TX 78746
http://www.ti.com/stellaris

Table of Contents

Chapter 1: Stellaris® LM3S3748 Evaluation Board 9
Features 10
Block Diagram 10
Kit Contents 11
Evaluation Board Specifications 12
Microcontroller Features 12
Chapter 2: Hardware Description 15
LM3S3748 Microcontroller Overview 15
Clocking 15
Reset 15
Power Supplies 15
USB 16
Debugging 17
Debugging Modes 17
Debug In Considerations 17
Debug USB 18
USB to JTAG/SWD 18
Virtual COM Port 18
Serial Wire Out 18
Color LCD 19
Features 19
Control Interface 19
Backlight 19
Power 20
Oscilloscope 20
Voltage Reference 20
Differential Inputs 20
Test Signals 21
Optimizing the Oscilloscope 21
Other Peripherals 22
Speaker 22
Navigation Switch 23
Status LED 23
Interfacing to the EVB 23
Bypassing Peripherals 23
In-Circuit Debugger Interface 23
Appendix A: Schematics 25
Appendix B: PCB 31
Component Locations 31
Evaluation Board Dimensions 33
Appendix C: Bill of Materials (BOM) 35
Appendix D: Connection Details 39
I/O Breakout Pads 39

DC Power Jack 40
ARM Target Pinout 40
Oscilloscope Header Pinout 40
Appendix E: References 43

List of Figures

Figure 1-1. LM3S3748 Evaluation Board 9
Figure 1-2. LM3S3748 EVB Block Diagram 11
Figure 2-1. Oscilloscope Acceptable Measurement Range 21
Figure 2-2. Oscilloscope Connections 21
Figure 2-3. ICD Interface Mode 24
Figure B-1. LM3S3748 Evaluation Board Component Locations 32
Figure B-2. LM3S3748 Evaluation Board Dimensions 33
Figure D-1. DC Power Jack 40

List of Tables

Table 2-1. Board Power Options 16
Table 2-2. USB-Related Signals 16
Table 2-3. LM3S3748 EVB Hardware Debugging Configurations 17
Table 2-4. Debug-Related Signals 18
Table 2-5. LCD-Related Signals 19
Table 2-6. Oscilloscope Electrical Specifications 20
Table 2-7. Speaker-Related Signals 22
Table 2-8. Navigation Switch-Related Signals 23
Table C-1. LM3S3748 Bill of Materials 35
Table D-1. I/O Breakout Pads 39
Table D-2. ARM Target Pinout 40
Table D-3. Oscilloscope Header Pinout 40

CHAPTER 1

Stellaris® LM3S3748 Evaluation Board

The Stellaris® LM3S3748 Evaluation Board (EVB) is a compact and versatile evaluation platform for the Stellaris LM3S3748 ARM® Cortex™-M3-based microcontroller. The evaluation board design highlights the LM3S3748 microcontroller's key features including USB 2.0 full-speed (12 Mbps) controller, Analog-to-Digital Converter (ADC), and serial interfaces.

The LM3S3748 EVB has connectors for both embedded USB Host and USB Device operation; allowing a range of USB application options to be evaluated. In USB Device mode, a small switch selects between bus-powered and self-powered options.

Four ADC signals are paired as two differential channels to implement a 1MS/s oscilloscope application on the LCD panel. The oscilloscope feature set includes USB host and device connectivity as well as SD card support.

The LM3S3748 EVB may be used either as an evaluation platform or as a low-cost in-circuit debug interface (ICDI). In Debug Interface mode, the on-board microcontroller is bypassed, allowing programming or debugging of an external target.

The LM3S3748 Evaluation Kit enables rapid evaluation and prototyping of LM3S3748 microcontroller designs. The kit also includes extensive example applications and complete source code. Figure 1-1 shows the LM3S3748 EVB in detail.

Figure 1-1. LM3S3748 Evaluation Board

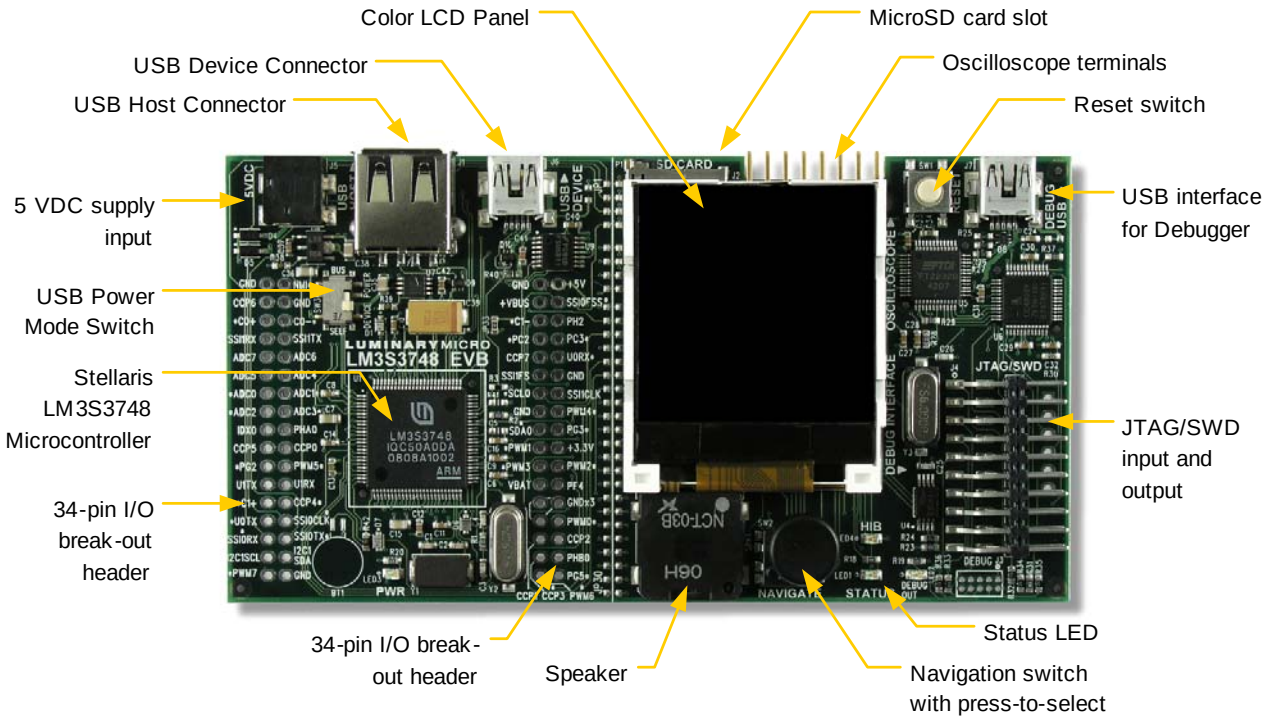

Features

The Stellaris LM3S3748 Evaluation Board includes the following features:

- Stellaris LM3S3748 microcontroller
- 2-channel oscilloscope demo application
- USB Host and Device connectors
- Bus-powered or self-powered
- Simple setup; USB cable provides serial communication, debugging, and power
- Color LCD graphics display with 128 x 128 pixel resolution
- User LED, and navigation switch with press to select
- 8Ω Magnetic speaker with amplifier
- microSD card slot
- USB interface for debugging and power supply
- DC jack for optional 5 V power supply
- Standard ARM® 20-pin JTAG debug connector with input and output modes
- LM3S3748 microcontroller I/O available on labeled break-out pads

Block Diagram

Figure 1-2 on page 11 shows the LM3S3748 EVB block diagram.

Figure 1-2. LM3S3748 EVB Block Diagram

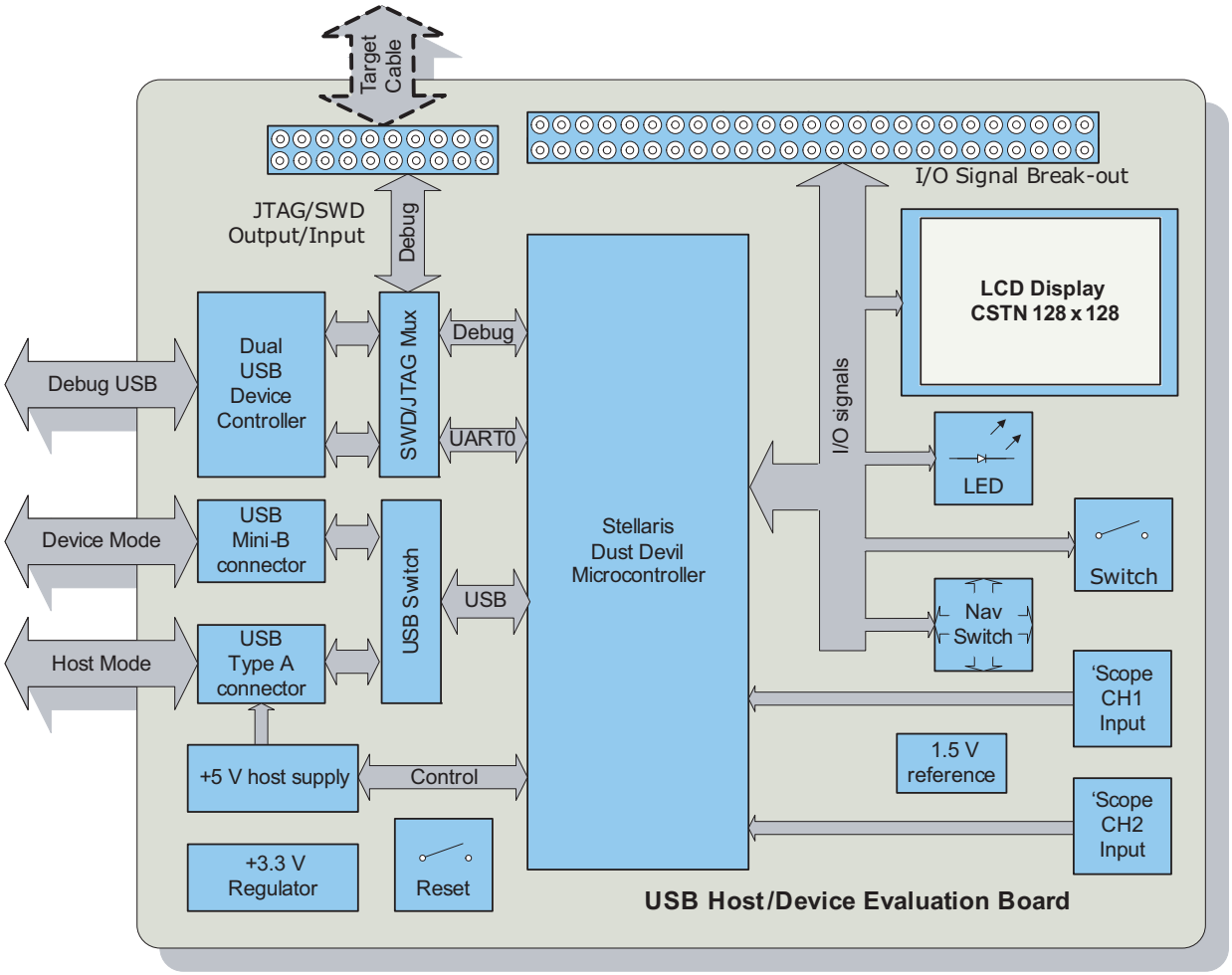

Kit Contents

The Stellaris LM3S3748 Evaluation Kit contains everything needed to develop and run USB applications using Stellaris microcontrollers including:

- LM3S3748 Evaluation Board (EVB)
- USB cables (1 each for device and debugger use)
- USB flash memory stick
- Four oscilloscope test leads
- 20-pin JTAG/SWD target cable
- CD containing:
  - A supported version of one of the following (including a toolchain-specific Quickstart guide):
    - Keil™ RealView® Microcontroller Development Kit (MDK-ARM)
    - IAR Embedded Workbench

    - Code Sourcery GCC development tools
    - Code Red Technologies development tools
    - Texas Instruments' Code Composer Studio™ IDE
  - Complete documentation
  - Quickstart application source code
  - Stellaris® Firmware Development Package with example source code

Evaluation Board Specifications

- Board supply voltage: 4.85–5.25 Vdc from one of the following sources:
  - Debugger USB cable (connected to a PC)
  - Device USB cable (connected to a PC)
  - DC power jack
- Board supply current: 130 mA typ (fully active, CPU at 50 MHz, no audio)
- Break-out power output: 3.3 Vdc (100 mA max)
- Speaker power: 0.3 W max
- Dimensions: 4.65" x 2.45" x 0.33" (L x W x H)
- RoHS status: Compliant

When the EVB is used in USB Host mode, the host connector is capable of supplying power to the connected USB device. The available supply current is limited to ~250 mA unless the EVB is powered from an external 5 V supply with a ≥ 600 mA rating.

Microcontroller Features

The LM3S3748 microcontroller includes the following product features:

- 32-bit RISC performance using ARM® Cortex™-M3 v7M architecture
  - 50-MHz operation
  - Hardware-division and single-cycle-multiplication
  - Integrated Nested Vectored Interrupt Controller (NVIC)
  - 37 interrupt channels with eight priority levels
- 128 KB single-cycle flash
- 64 KB single-cycle SRAM
- Pre-programmed ROM
- DMA controller
- Two SSI modules
- One USB Host controller
- Four general-purpose 32-bit timers
- Two fully programmable 16C550-type UARTs
- Eight 10-bit ADC channels (inputs) when used as single-ended inputs

- Two integrated analog comparators
- Two I^2C modules
- Four PWM generator blocks
- One QEI module with position integrator for tracking encoder position
- 3 to 61 GPIOs, depending on user configuration
- On-chip low drop-out (LDO) voltage regulator
- Hibernation module

CHAPTER 2

Hardware Description

In addition to a microcontroller, the Stellaris® LM3S3748 evaluation board includes a range of useful peripheral features and an integrated in-circuit debug interface (ICDI). This chapter describes how these peripherals operate and interface to the microcontroller.

LM3S3748 Microcontroller Overview

The heart of the EVB is a Stellaris LM3S3748 ARM® Cortex™-M3-based microcontroller. The LM3S3748 microcontroller offers 128-KB flash memory, 64-KB SRAM memory, 50-MHz operation, USB, and a wide range of peripherals. See the LM3S3748 microcontroller data sheet (order number DS-LM3S3748) for complete device details.

The LM3S3748 microcontroller is factory-programmed with a quickstart demo program. The quickstart program resides in on-chip flash memory and runs each time power is applied, unless the quickstart has been replaced with a user program.

Clocking

The EVB uses an 8.0-MHz crystal to complete the LM3S3748 microcontroller's main internal clock circuit. An internal PLL, configured in software, multiplies this clock to 50 MHz for core and peripheral timing.

The real-time clock oscillator is part of the microcontroller's Hibernation module and uses a 4.194304 MHz crystal for timing. This frequency divides by 128 to generate a 32.7680 kHz standard timing frequency.

Reset

The LM3S3748 microcontroller shares its external reset input with the LCD display. In the EVB, reset sources are gated through the CPLD, though in a typical application, a simple wired-OR arrangement, with a resistor to +3.3 V, is sufficient.

External reset is asserted (active low) under any one of these conditions:

- Power-on reset
- Reset push switch SW1 held down
- By the USB device controller (U5 FT2232) when instructed by the debugger

Power Supplies

The EVB has two main power rails. A +3.3 V supply powers the microcontroller and most other circuitry. A +5 V supply is used by the Host USB port and In-circuit Debug Interface (ICDI) USB controller. A low drop-out (LDO) regulator (U8) converts the +5 V power rail to +3.3 V. Both rails are routed to pads on the I/O break-out headers and may be used to power external circuits.

EVB power can be supplied through three different connectors as shown in Table 2-1.

Table 2-1. Board Power Options

Power Source	Reference	Main Features Powered?	USB Host Feature Powered
DC Jack	J5	Yes	Yes
USB Device connector	J6	Yes[a]	No
Debug Interface USB connector	J7	Yes	Yes

a. To power the EVB, the USB power switch (SW3) must be in the “BUS” position.

Only one power source should be connected to the EVB. If the USB Power switch (SW3) is in the BUS position, the board should be powered from J6 (USB Device connector). If the USB Power switch is in the SELF position, the board should be powered from J7 (Debug USB connector) or from J5 (DC power jack). Do not apply power to J5 and J7 at the same time.

The current and voltage available on the USB host port is a function of the EVB power source. If board power is provided by a USB cable, the host port power is limited to 500 mA minus the EVB power requirements. Use the DC jack to provide power from a +5 V source if a full 500 mA USB host supply is necessary on J7.

USB

The LM3S3748's full-speed USB controller supports both Host and Device configurations. In Host mode, the EVB acts as a host for USB devices connected to J1. In Device mode, the EVB acts as a device and can be connected to another USB host, such as a PC.

The EVB has dedicated USB Host and USB Device connectors. A multiplexer (U9), controlled by a GPIO pin (PH2/PB0), determines which port is active by switching D+ and D- signals. Each port has additional ESD protection diode arrays (D9, D10) for up to 15 kV of electrostatic discharge (ESD) protection.

Table 2-2. USB-Related Signals

Microcontroller Pin	EVB Function	To isolate, remove...
Pin 70 USBDM	USB Data-	-
Pin 71 USBDP	USB Data+	-
Pin 73 USBRBIAS	USB bias resistor	-
Pin 66 PB0	Input (see Rev A0 errata)	-
Pin 67 PB1	Input (see Rev A0 errata)	-
Pin 84 PH2	USB Host/Device mux control	JP33
Pin 83 PH3/USB0EPEN	Host power enable (active high)	-
Pin 76 PH4/$\overline{\text{USB0PFLT}}$	Host power fault (active low)	-

U7, a fault-protected switch, controls and monitors power to the USB Host port. USB0EPEN, the control signal from the microcontroller, has a pull-down resistor to ensure Host-port power remains

off during reset. The power switch immediately cuts power if the attached USB device draws more than 1 Amp, or if the switches' thermal limits are exceeded by a device drawing more than 500 mA. Under fault conditions, U7 will set its over-current output pin low. This is an open-drain signal, so a pull-up must be enabled by the microcontroller. The USB controller can be configured to generate an interrupt if $\overline{\text{USB0PFLT}}$ is asserted.

The EVB can be either a bus-powered USB device or self-powered USB device depending on the position of the USB power switch (SW3).

WARNING – Do not change the USB power selection while power is applied. Doing so may damage the switch contacts.

When using the EVB in USB-Host mode, power to the EVB should be supplied by the In-circuit Debugger (ICDI) USB cable or by a +5 V source connected to the DC power jack. Set the USB power switch to self-power.

Note that the LM3S3748 microcontroller's USB capabilities are completely independent from the ICDI USB functionality.

Debugging

Stellaris microcontrollers support programming and debugging using either JTAG or SWD. JTAG uses the signals TCK, TMS, TDI, and TDO. SWD requires fewer signals (SWCLK, SWDIO, and, optionally, SWO for trace). The debugger determines which debug protocol is used.

Debugging Modes

The LM3S3748 EVB supports a range of hardware debugging configurations. Table 2-3 summarizes these configurations.

Table 2-3. LM3S3748 EVB Hardware Debugging Configurations

Mode	Debug Function	Use	Selected by...
1	Internal ICDI	Debug on-board LM3S3748 microcontroller over Debug USB interface.	Default mode
2	ICDI out to JTAG/ SWD header	The EVB is used as a USB to SWD/ JTAG interface to an external target.	Connecting to an external target and starting debug software. The red Debug Out LED will be ON
3	In from JTAG/SWD header	For users who prefer an external debug interface (ULINK, JLINK, etc.) with the EVB.	Connecting an external debugger to the JTAG/SWD header

Modes 2 and 3 automatically detect the presence of an external debug cable. When the debugger software connected to the EVB's USB controller the EVB automatically selects Mode 2 and illuminates the red Debug Out LED.

Debug In Considerations

Debug Mode 3 supports evaluation board debugging using an external debug interface. Mode 3 is automatically selected when a device such as a Segger J-Link or Keil ULINK is connected to the EVB.

Debug USB

An FT2232 device from Future Technology Devices International Ltd manages USB-to-serial conversion. The FT2232 is factory-configured to implement a JTAG/SWD port (synchronous serial) on channel A and a Virtual COM Port (VCP) on channel B. This feature allows two simultaneous communications links between the host computer and the target device using a single USB cable. Separate Windows drivers for each function are provided on the Documentation and Software CD.

The ICDI USB capabilities are completely independent from the LM3S3748's on-chip USB functionality.

A small serial EEPROM holds the FT2232 configuration data. The EEPROM is not accessible by the LM3S3748 microcontroller. For full details on FT2232 operation, go to www.ftdichip.com.

USB to JTAG/SWD

The FT2232 USB device performs JTAG/SWD serial operations under the control of the debugger. A CPLD (U6) multiplexes SWD and JTAG functions and, when working in SWD mode, provides direction control for the bidirectional data line. The CPLD also implements logic to select between the three debug modes. The target microcontroller selection is determined by multiplexing TCK/SWCLK.

Virtual COM Port

The Virtual COM Port (VCP) allows Windows applications (such as HyperTerminal) to communicate with UART0 on the LM3S3748 over USB. Once the FT2232 VCP driver is installed, Windows assigns a COM port number to the VCP channel.

Table 2-4. Debug-Related Signals

Microcontroller Pin	EVB Function	To isolate, remove...
Pin 77 TDO/SWO	JTAG data out or trace data out	-
Pin 78 TDI	JTAG data in	-
Pin 79 TMS/SWDIO	JTAG TMS or SWD data in/out	-
Pin 80 TCK/SWCLK	JTAG Clock or SWD clock	-
Pin 26 PA0/U0RX	Virtual Com port data to LM3S3748	JP12
Pin 27 PA1/U0TX	Virtual Com port data from LM3S3748	JP25

Serial Wire Out

The EVB supports the Cortex-M3 Serial-Wire Output (SWO) trace capabilities. Under debugger control, the CPLD can route the SWO datastream to the VCP transmit channel. The debugger can then decode and interpret the trace information received from the Virtual Com Port (VCP). The normal VCP connection to UART0 is interrupted when using SWO.

Not all debuggers support SWO.

Refer to the Stellaris LM3S3748 Datasheet for additional information on the Trace Port Interface Unit (TPIU).

Color LCD

The EVB features a liquid crystal graphics display with 128 x 128 pixel resolution. The display is protected during shipping by a thin, protective plastic film. Remove the film by gently pulling the green tab.

Features

The color LCD includes the following features:

- Formike Electronic KWH015C04-F01 display
- CSTN 128 x‘ h128 resolution
- 16-bit color
- White LED backlight
- 8-bit data bus
- ST7637 Drive IC

Control Interface

The color LCD module has a built-in controller IC with an 8-bit parallel interface. Port G is used to transfer data to and from the LCD module. Three control signals (A0, $\overline{WR}$, $\overline{RD}$) provide read/write and register/data control using GPIO pins.

Table 2-5. LCD-Related Signals

Microcontroller Pin	EVB Function	To isolate, remove...
Pin 19 PG0	LCD Data 0	JP16
Pin 18 PG1	LCD Data 1	JP14
Pin 19 PG2	LCD Data 2	JP17
Pin 16 PG3	LCD Data 3	JP18
Pin 41 PG4	LCD Data 4	JP26
Pin 40 PG5	LCD Data 5	JP27
Pin 37 PG6	LCD Data 6	JP28
Pin 36 PG7	LCD Data 7	JP29
Pin 25 PC4	LCD Write Enable (active low)	JP30
Pin 24 PC5	LCD Read Enable (active low)	JP21
Pin 72 PB2	LCD Register / Data select	JP11
Pin 61 PF1/PWM1	Backlight control	JP19

Backlight

The white LED backlight must be powered for the display to be visible. Set PF1/PWM1 high to turn on the backlight. For brightness control, use the pin's PWM function to reduce the normal 34 mA supply current.

Power

The LCD module has internal bias voltage generators and requires only a single 3 Vdc supply, which is provided via D2 and D3.

Oscilloscope

The oscilloscope feature has two differential measurement channels which provide waveform acquisition using the LM3S3748 microcontroller's Analog-to-Digital Converter (ADC). This section describes the oscilloscope hardware. For a detailed description of the oscilloscope operation and software, see the *Stellaris® Peripheral Driver Library User's Guide* in the LM3S3748 Evaluation Kit's Example Applications section.

Voltage Reference

The oscilloscope circuit can measure negative voltages by biasing the oscilloscope input channels to +1.5 V. A voltage divider is buffered by an op-amp (U2) for a low impedance voltage reference. The reference voltage varies proportionally with the 3.3 V rail, but the differential measurement configuration will successfully reject this error.

Differential Inputs

Both input channels have 11:1 differential input voltage dividers. For accuracy, 0.1% resistors are used. The ADC inputs to the LM3S3748 microcontroller have two key parameters sets in this application circuit. The first are the common-mode (absolute) voltage limits of 0 to 3.0 V. This sets the voltage limit on any oscilloscope input signal to +16.5 V to -16.5 V, using the following equations:

$Vcm_{(max+)} = (Vadc_{(max)} - Vref) * 11 = +16.5\ V$

$Vcm_{(max-)} = (Vadc_{(min)} - Vref) * 11 = -16.5\ V$

The second key parameter set is the differential mode voltages limits, which are +1.5 V and -1.5 V. These values are important in defining the maximum voltage between the inputs to each channel.

$Vdm = Vadc_{(diff)} * 11 = +/-16.5\ V$

Table 2-6. Oscilloscope Electrical Specifications

Parameter Name	Min	Nom	Max	Units
Common Mode Input Voltage	-16.5	–	+16.5	V
Differential Input Voltage	–	–	+16.5	V
Differential Input Voltage	–	–	-16.5	V
Input Impedance	–	220K	–	Ω

Figure 2-1. Oscilloscope Acceptable Measurement Range

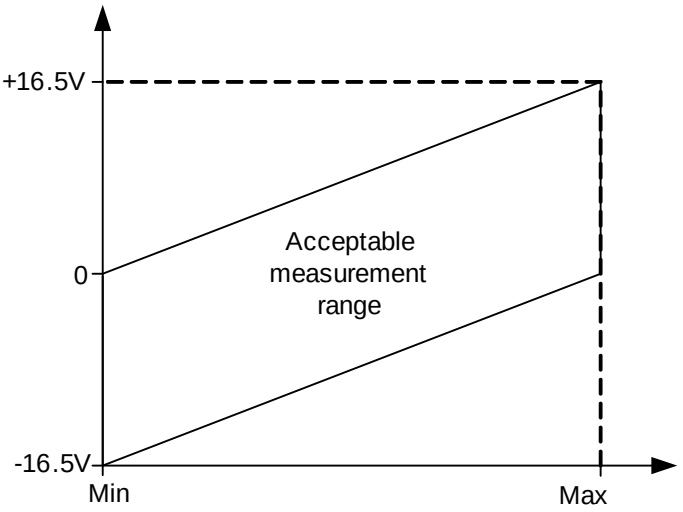

Test Signals

The oscilloscope inputs may be used to measure voltages and waveforms at various points on the board. Consider the oscilloscope's input impedance (220 KΩ) when selecting signals to measure. The EVB has two defined test points that can be easily accessed on the oscilloscope header.

Figure 2-2. Oscilloscope Connections

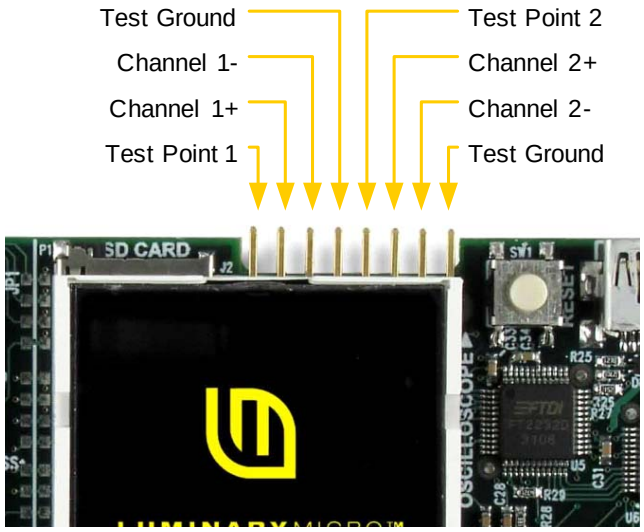

The oscilloscope test leads, included in the evaluation kit, have pin-sockets that are compatible with a wide range of test probes, clips, and hooks that have 0.025" square terminal posts.

Optimizing the Oscilloscope

The oscilloscope hardware is a simple design that balances trade-offs between input impedance, signal bandwidth, and measurement error.

Measurement error is introduced when an ADC is fed from a high-impedance source. Each time the ADC makes a conversion, a very small capacitor in the ADC input-stage must be charged. During the charging period, the voltage may drop slightly.

Using only one oscilloscope channel will reduce the error, because the internal capacitance charges to approximately the same level for each conversion. The error can also be reduced by adding a capacitor across the differential inputs to the ADC (for example, between ADC0 and ADC1).

Adding 33 pF capacitors will stabilize the input to the ADC, however, it will also create a 24-kHz low-pass filter. This will limit the usable bandwidth of the oscilloscope, but will optimize it for DC level measurements.

Another method is to reduce the values of the input divider resistors. The best overall solution would be a high-performance op-amp buffer stage.

Other Peripherals

Speaker

The LM3S3748 evaluation board's speaker circuit can be used in either tone or waveform mode.

In tone mode, the LM3S3748 microcontroller's PWM module directly generates tones within the audible frequency range. The width of the pulses determines the volume. If only one PWM signal (PWM2 or PWM3) is used, then the non-PWM signal should be configured as a general-purpose output. For increased speaker volume, PWM2 and PWM3 can be configured as complementary drive signals. In tone and waveform modes, be careful to avoid large DC currents in the speaker. Do not drive the PWM levels to opposite polarities for more than 10 ms.

Waveform mode uses two high-frequency PWM signals to drive a MOSFET H-bridge with an output filter. This circuit is essentially a Class-D amplifier. The symmetrical 2nd order low-pass L-C filter has a cut-off frequency of approximately 33 kHz. The microcontroller's PWM module should be configured with a PWM frequency of at least 66 kHz. Using higher frequencies (for example, 500 kHz) improves audio quality. Once configured, audio waveform data can be used to update the PWM duty cycle at a rate equal to the audio sampling rate.

The speaker on the evaluation board has standard 8-Ω impedance. Audio quality can be enhanced by adding a small, vented enclosure around the speaker.

Table 2-7. Speaker-Related Signals

Microcontroller Pin	EVB Function	To isolate, remove...
Pin 60 PF2/PWM2	Audio PWM +	JP22
Pin 59 PF3/PWM3	Audio PWM -	JP20

Navigation Switch

The EVB has a four-way navigation switch (SW2) with press-to-select functionality. Each of the five signals connects to GPIO pins on the LM3S3748 microcontroller. The internal 200 kΩ pull-up resistors should be enabled before reading switch status.

Table 2-8. Navigation Switch-Related Signals

Microcontroller Pin	EVB Function	To isolate, remove...
Pin 65 PB3	Up Switch	JP13
Pin 92 PB4	Down Switch	JP10
Pin 91 PB5	Left Switch	JP9
Pin 90 PB6	Right Switch	JP23
Pin 89 PB7	Select Switch	D1

The press-to-select switch also connects to the $\overline{\text{WAKE}}$ signal on the LM3S3748's microcontroller's Hibernate module. Diode D1 blocks current from the $\overline{\text{WAKE}}$ internal pull-up when in Hibernate mode. The diode is transparent in normal switch operation.

Status LED

A user LED (LED3) is provided for general use. The LED is connected to PG2/PWM0, allowing the option of either GPIO or PWM control (brightness control).

Interfacing to the EVB

An array of accessible I/O signals makes it easy to interface the EVB to external circuits. All LM3S3748 I/O lines (except those with both JTAG and SWD functions) are brought out to 0.1" pitch pads. For quick reference, silk-screened labels on the PCB show primary pin functions. Table x on page y has a complete list of I/O signals as well as recommended connectors. Most LM3S3748 I/O signals are +5-V tolerant. Refer to the LM3S3748 microcontroller data sheet for detailed electrical specifications.

Bypassing Peripherals

The EVB's on-board peripheral circuits require 30 GPIO lines. This leaves 23 GPIO lines immediately available for connection to external circuits. If an application requires more GPIO lines, the on-board hardware can be disconnected. The EVB is populated with 30 jumper links, which can be cut with a knife to isolate on-board hardware. The process can be reversed by installing 0603- 0-ohm chip resistors.

NOTE: The quickstart application will not run if one or more jumpers are removed.

In-Circuit Debugger Interface

The LM3S3748 Evaluation Kit can operate as an In-Circuit Debugger Interface (ICDI). ICDI acts as a USB to the JTAG/SWD adaptor, allowing debugging of any external target board that uses a Stellaris microcontroller. See “Debugging” on page 17 for a description of how to enter Debug Out mode.

Figure 2-3. ICD Interface Mode

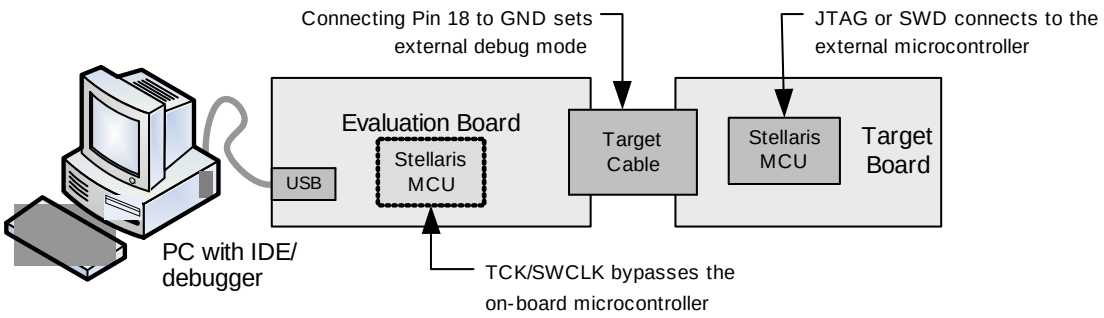

The debug interface operates in either serial-wire debug (SWD) or full JTAG mode, depending on the configuration in the debugger IDE.

The IDE/debugger does not distinguish between the on-EVB Stellaris microcontroller and an external Stellaris microcontroller. The only requirement is that the correct Stellaris device is selected in the project configuration.

The Stellaris target board should have a 2x10 0.1" pin header with signals as indicated in Table D-2 on page 40. This applies to both an external Stellaris microcontroller target (Debug Output mode) and to external JTAG/SWD debuggers (Debug Input mode).

ICDI does not control $\overline{\text{RST}}$ (device reset) or $\overline{\text{TRST}}$ (test reset) signals. Both reset functions are implemented as commands over JTAG/SWD, so these signals are usually not necessary.

It is recommended that connections be made to all GND pins; however, both targets and external debug interfaces must connect pin 18 and at least one other GND pin to GND. Some external debug interfaces may require a voltage on pin 1 to set line driver thresholds. The EVB ICDI circuit automatically sets pin 1 high if an external debugger is connected. In other modes, this pin is unused.

APPENDIX A

Schematics

This section contains the following schematic diagrams for the LM3S3748 evaluation board:

- Microcontroller on page 26
- Power, USB Selection on page 27
- LCD, Switches, and Audio on page 28
- Debugger Interfaces on page 29
- JTAG Logic with Auto Mode Detect, Hibernate, and TVcc Control on page 30

On-board LCD Signals

Jumpers can be cut to
free GPIO lines if required.

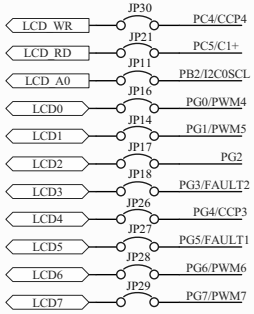

Stellaris LM3S3748 Microcontroller

Note 1:
PH2 controls USB mux (and PB0 input per errata).
PB0 to HOSTEn connection required for Rev A0 silicon.

Note 2:
PB1 jumpered to +5V per Rev A0 errata.

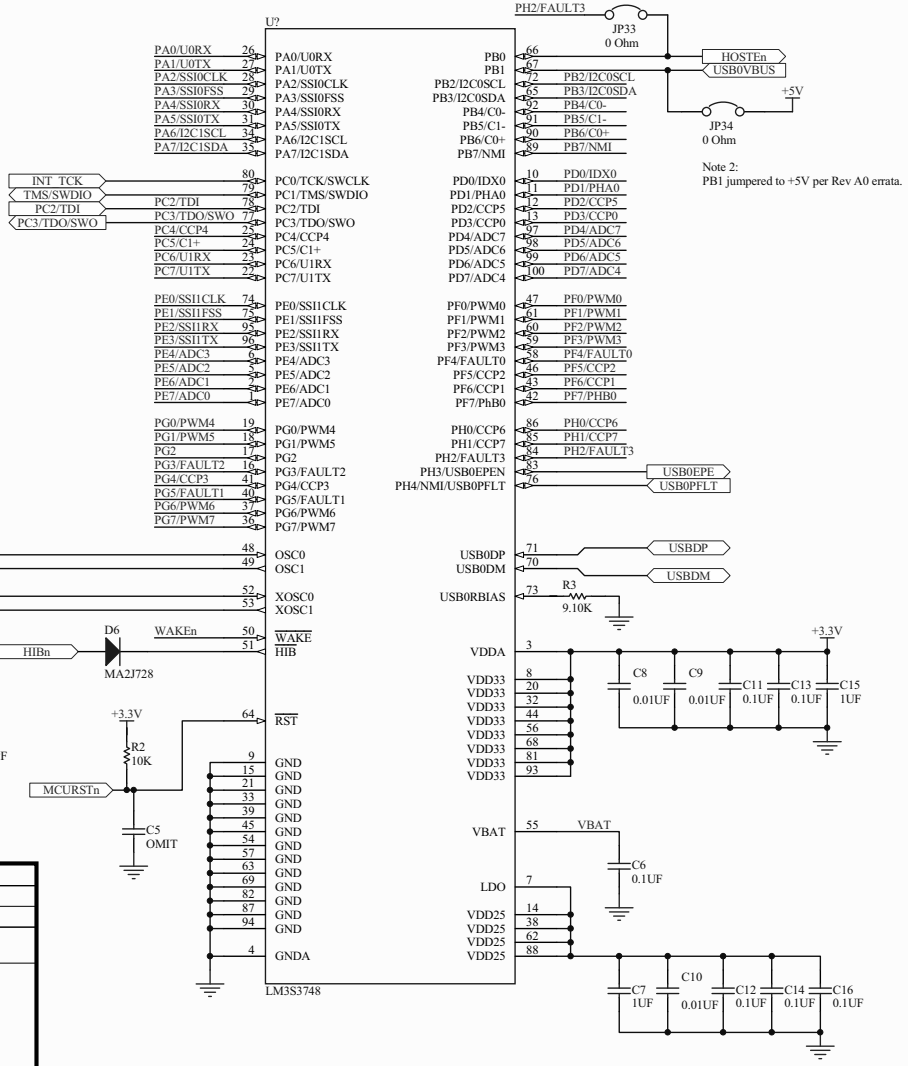

I/O Break-out Headers

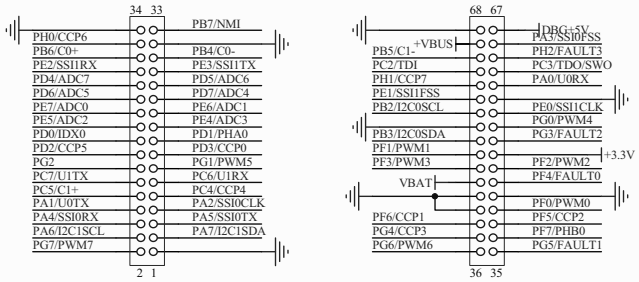

Oscilloscope Signals

Jumpers can be cut to
free GPIO/ADC lines if required.

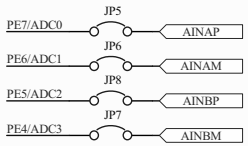

On-board Peripheral Signals

Jumpers can be cut to
free GPIO lines if required.

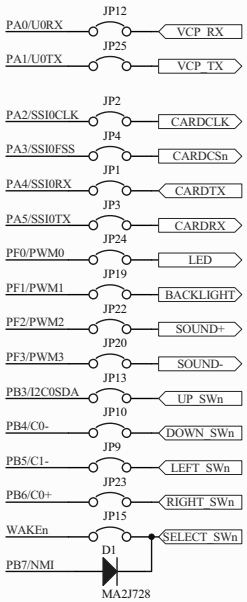

History

Revision	Date	Description
0	Jan 31,08	Final prototype release
A	Apr 2, 08	First production release
B	Jul 3, 08	Add PB1 to +5V jumper. Add pull-up on reset switch.

TEXAS INSTRUMENTS

Drawing Title:	Stellaris USB Host/Device Eval Board	
Page Title:	Microcontroller	
Size: B	Document Number: BD-LM3S3748	
Date: 7/3/2008	Sheet 1 of 4	Rev A

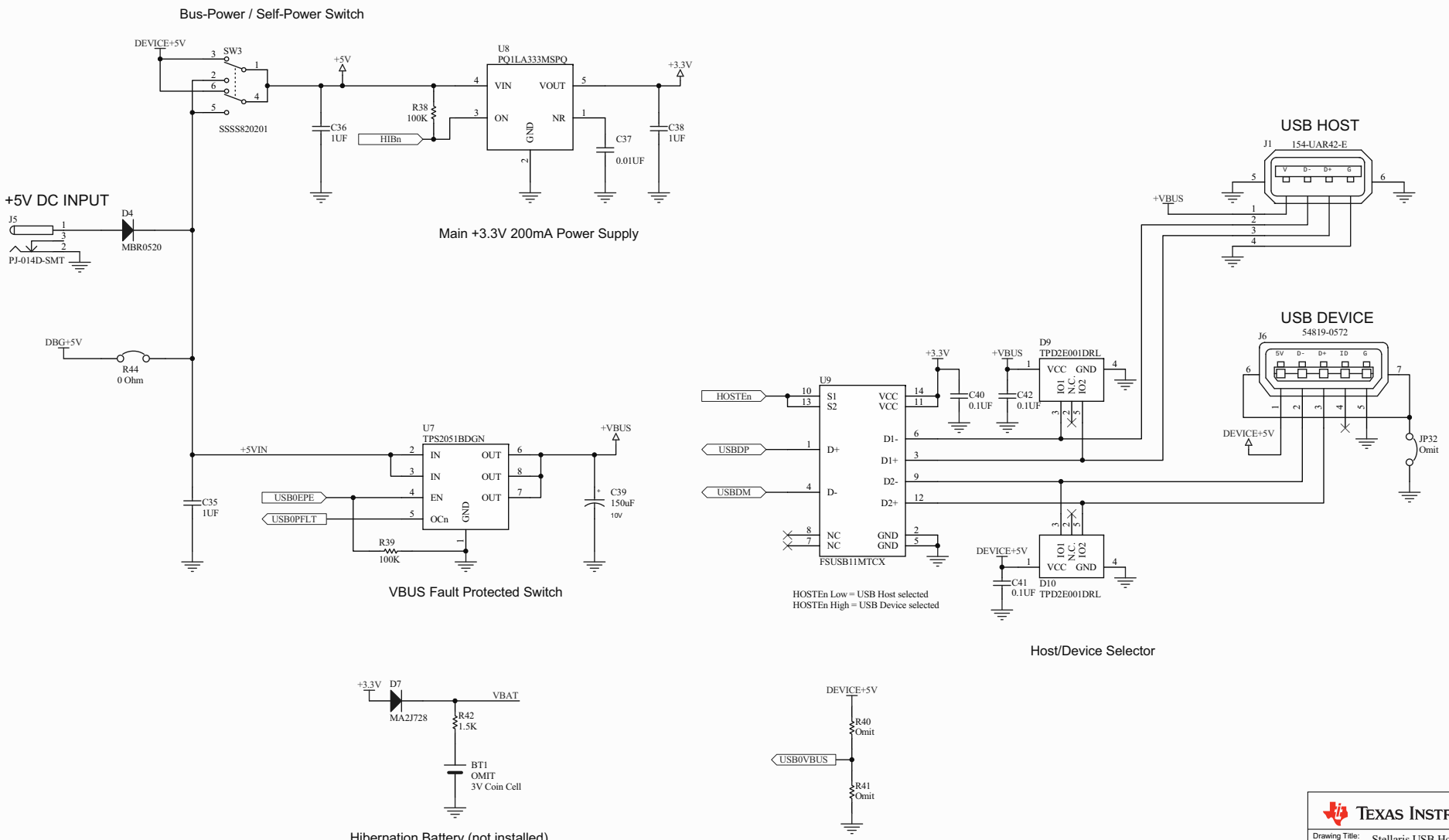

Drawing Title:	Stellaris USB Host/Device Eval Board
Page Title:	Power, USB Selection
Size: B	Document Number: BD-LM3S3748
Date: 7/3/2008	Sheet 2 of 4 — Rev A

TEXAS INSTRUMENTS

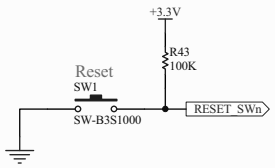

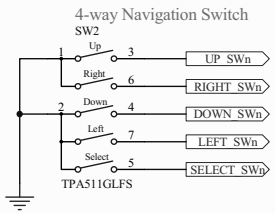

User Switches

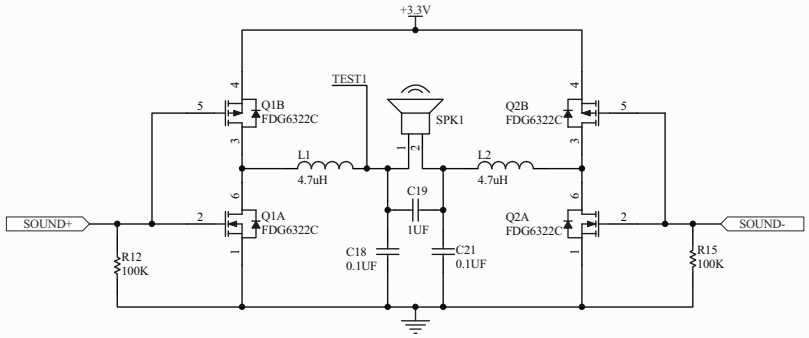

Audio Amplifier

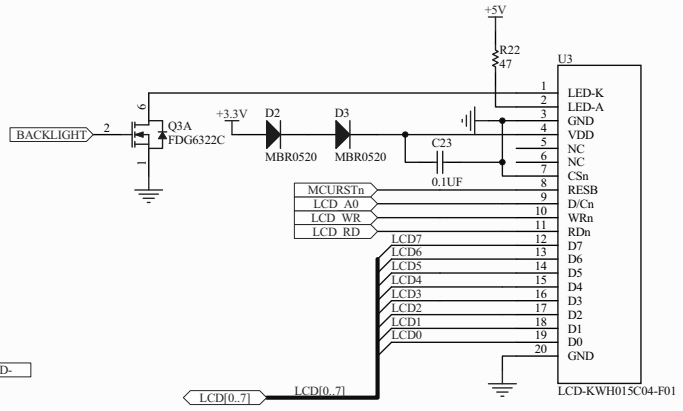

128x128 CSTN LCD Graphics Display

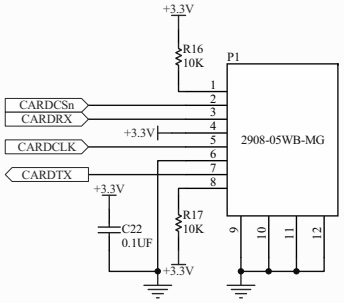

microSD Card Slot

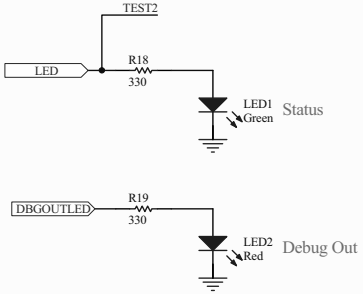

Status LEDs

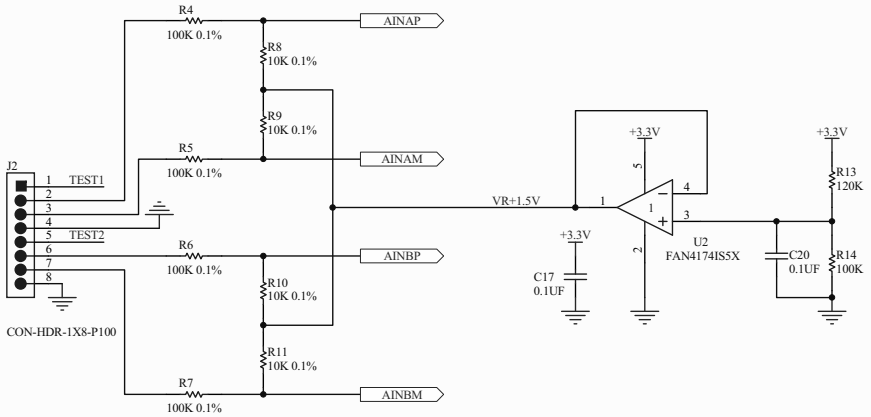

2 Channel Oscilloscope

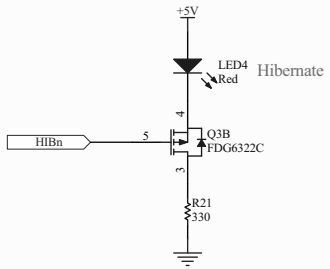

Hibernate Mode Indicator

Texas Instruments	
Drawing Title:	Stellaris USB Host/Device Eval Board
Page Title:	LCD, Switches and Audio
Size: B	Document Number: BD-LM3S3748
Date: 7/3/2008	Sheet 3 of 4 — Rev A

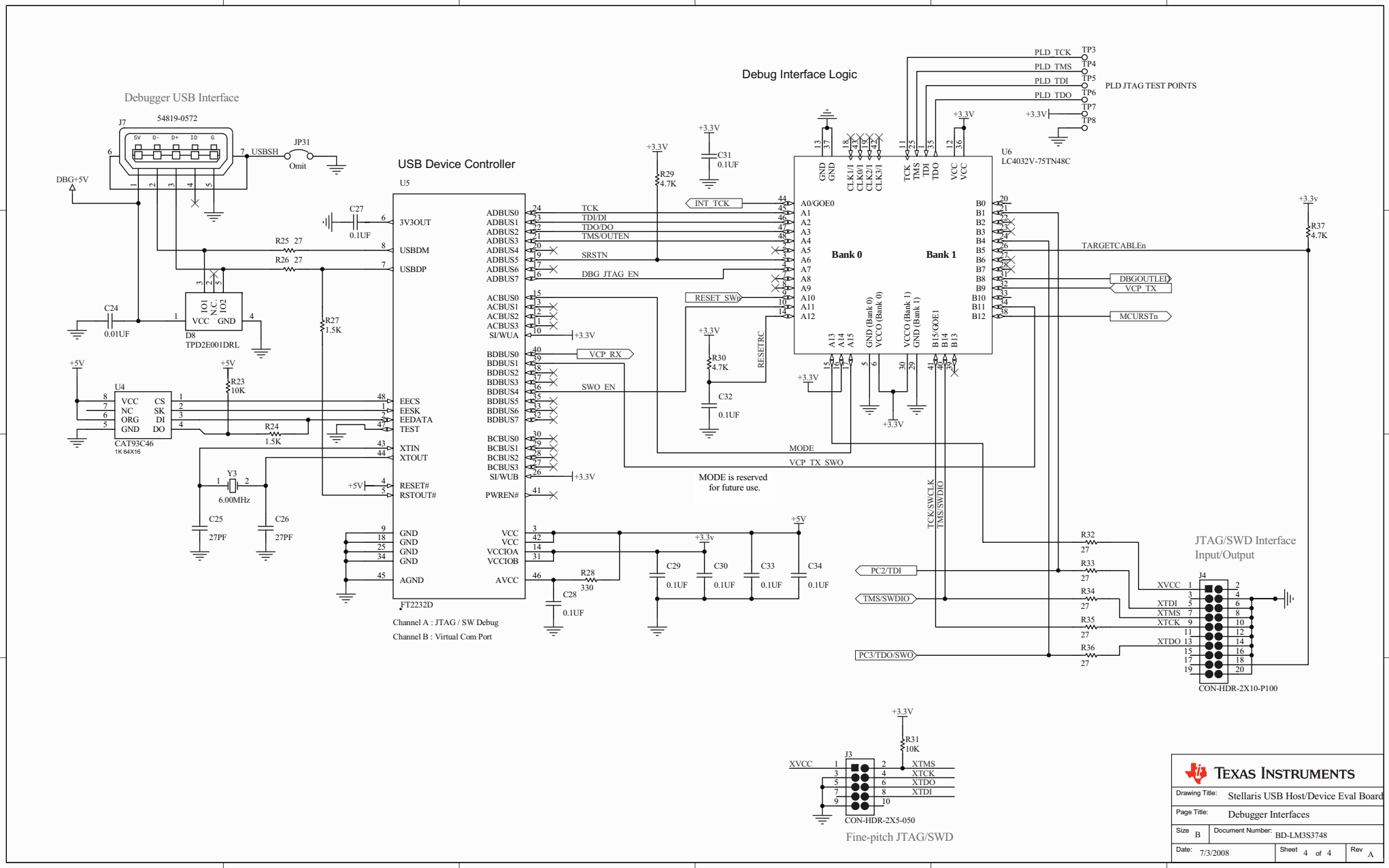
Debugger USB Interface
J7
54819-0572
USBSH
JP31
Omit
DBG+5V
USB Device Controller
U5
FT2232D
Channel A : JTAG / SW Debug
Channel B : Virtual Com Port
Debug Interface Logic
U6
LC4032V-75TN48C
Bank 0
Bank 1
PLD JTAG TEST POINTS
PLD_TCK
PLD_TMS
PLD_TDI
PLD_TDO
TP3
TP4
TP5
TP6
TP7
TP8
INT_TCK
RESET_SWp
RESETRC
TARGETCABLEn
DBGOUTLED
VCP_TX
MCURSTn
VCP_RX
SWO_EN
MODE
VCP_TX_SWO
MODE is reserved
for future use.
TCK/SWCLK
TMS/SWDIO
PC2/TDI
TMS/SWDIO
PC3/TDO/SWO
JTAG/SWD Interface
Input/Output
J4
CON-HDR-2X10-P100
J3
CON-HDR-2X5-050
Fine-pitch JTAG/SWD
D8
TPD2E001DRL
U4
CAT93C46
1K 64X16
Y3
6.00MHz
TEXAS INSTRUMENTS
Drawing Title: Stellaris USB Host/Device Eval Board
Page Title: Debugger Interfaces
Size B
Document Number: BD-LM3S3748
Date: 7/3/2008
Sheet 4 of 4
Rev A

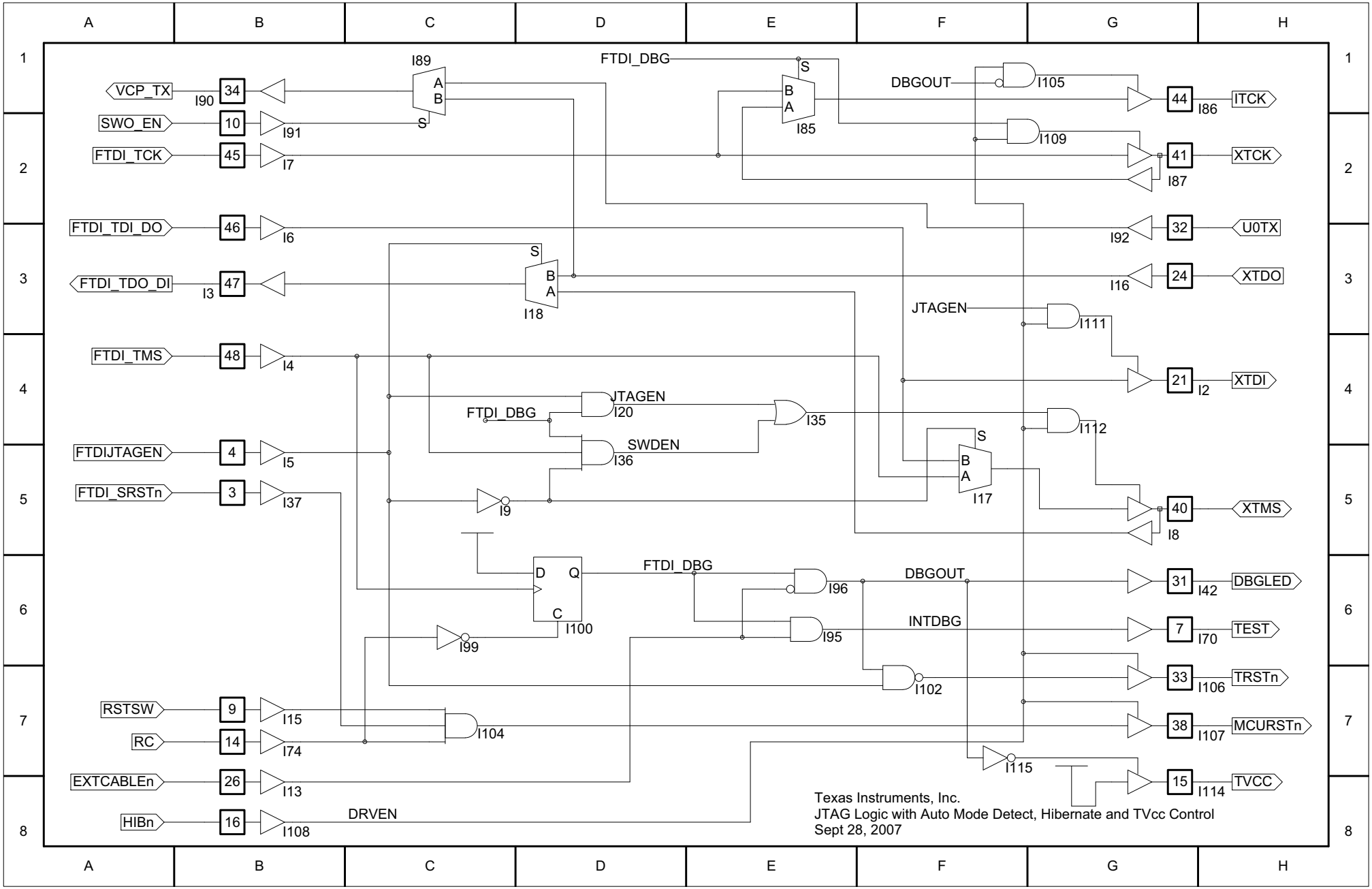
VCP_TX
SWO_EN
FTDI_TCK
FTDI_TDI_DO
FTDI_TDO_DI
FTDI_TMS
FTDIJTAGEN
FTDI_SRSTn
RSTSW
RC
EXTCABLEn
HIBn
ITCK
XTCK
U0TX
XTDO
XTDI
XTMS
DBGLED
TEST
TRSTn
MCURSTn
TVCC
FTDI_DBG
DBGOUT
JTAGEN
SWDEN
INTDBG
DRVEN
Texas Instruments, Inc.
JTAG Logic with Auto Mode Detect, Hibernate and TVcc Control
Sept 28, 2007

A P P E N D I X B

PCB

This appendix contains plots showing component locations and board dimensions.

- Component Locations (see page 32)
- Evaluation Board Dimensions (see page 33)

Component Locations

The figure on the following page shows component locations.

Figure B-1. LM3S3748 Evaluation Board Component Locations

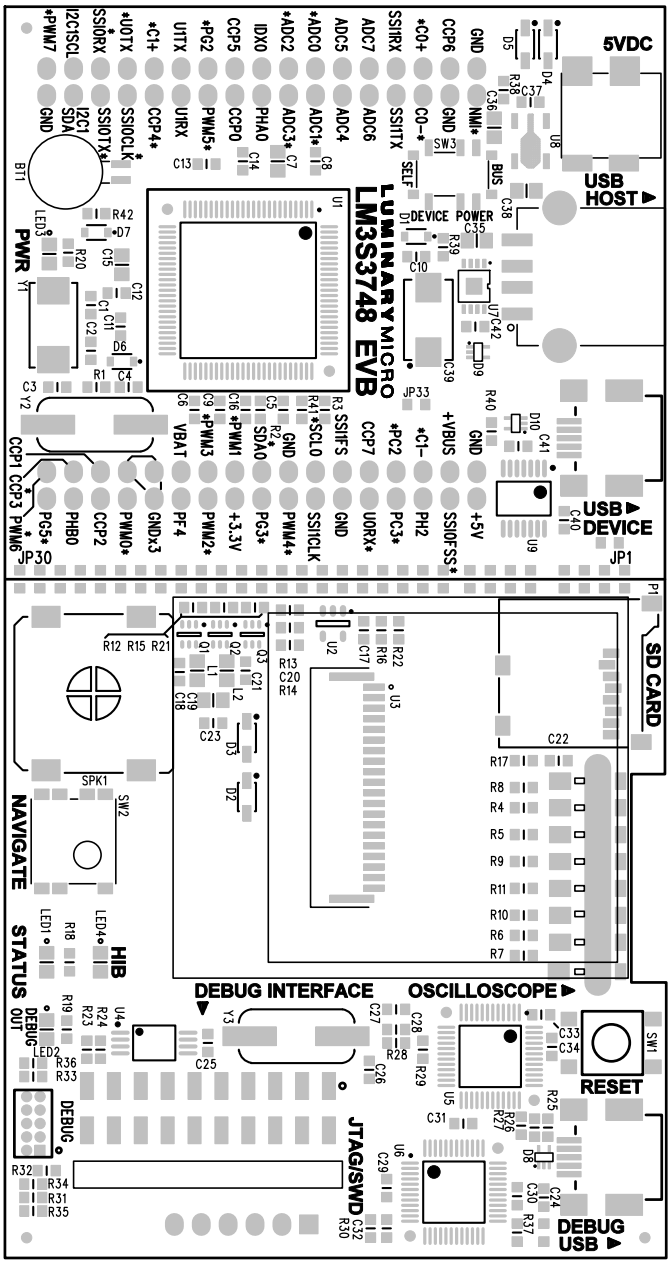

Evaluation Board Dimensions

Figure B-2. LM3S3748 Evaluation Board Dimensions

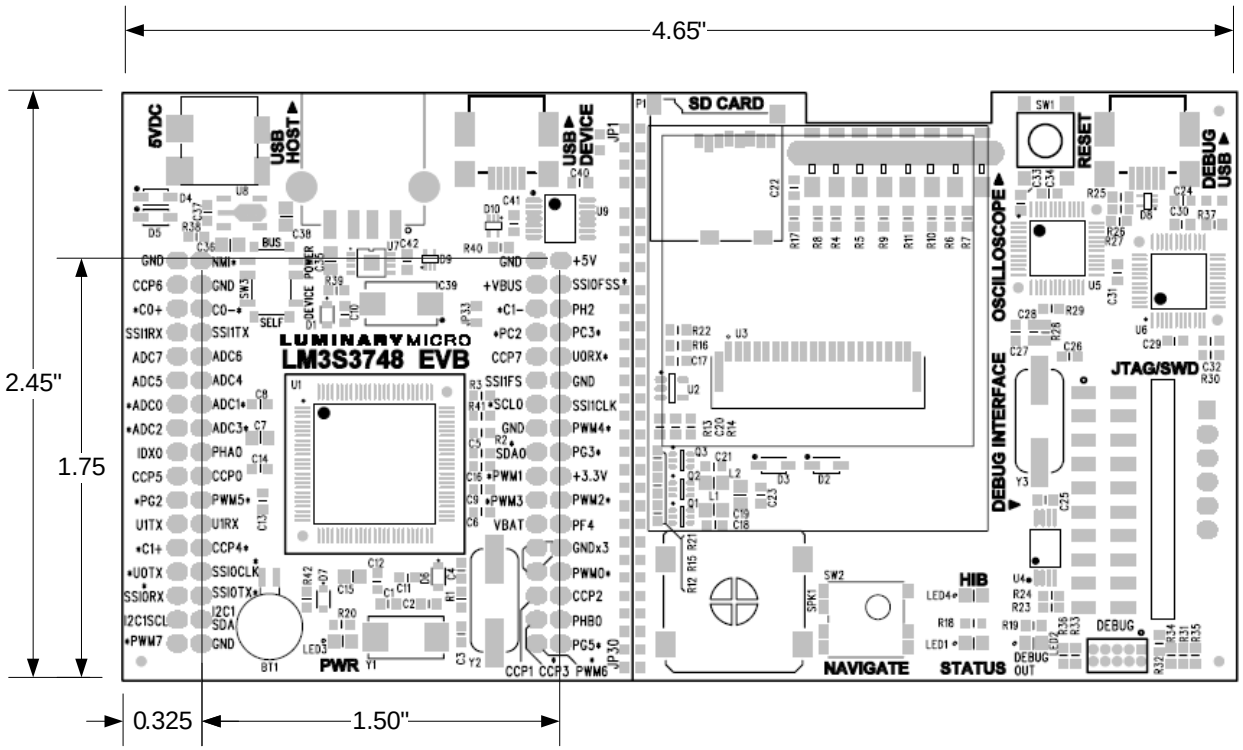

A P P E N D I X C

Bill of Materials (BOM)

Table C-1 provides the BOM for the LM3S3748 Evaluation Kit.

Table C-1. LM3S3748 Bill of Materials

Reference	Qty	Part Number	Description	Mfg	Supplier	Stock No.
C1, C2	2	C0603C100J5GACTU	Capacitor 10pF 50V 5% Ceramic NPO/COG 0603	Kemet	Mouser	80-C0603C100J5G
C3, C4, C25, C26	4	C0603C270J5GACTU	Capacitor 27pF 50V 5% Ceramic NPO/COG 0604	Kemet	Mouser	80-C0603C270J5G
C39	1	T491D157M010AT	Capacitor 150uF 10V Tantalum Size D	Kemet	Digikey	399-3778-2-ND
C6, C11, C12, C13, C14, C16, C17, C18, C20, C21, C22, C23, C27, C28, C29, C30, C31, C32, C33, C34, C40, C41, C42	23	C0603C104K4RACTU	Capacitor, 0.1uF 16V 10% 0603 X7R	Kemet	Mouser	80-C0603C104K4R
C7, C15, C19, C35, C36, C38	6	TMK212BJ105KG-T	Capacitor 1.0uF 25V X5R 0805	Taiyo Yuden	Digikey	587-1291-1-ND
C8, C9, C10, C24, C37	5	C0603C103J5RACTU	Capacitor, 0.01uF 50V 5% 0603 X7R	Kemet	Mouser	80-C0603C103J5R
D2, D3, D4, D5	4	MBR0520L	Diode, Schottky 500mA 20V SOD123	Fairchild	Arrow/ Mouser	MBR0520L
D1, D6, D7	3	MA2J728	Diode, Schottky 30mA 30V Low Ir	Panasonic	Digikey	MA2J72800LTR-ND
D8, D9, D10	3	TPD2E001DRLR	Diode, ESD protection array Low-cap SOT-533	TI	Digikey	296-21883-1-ND
J1	1	AU-Y1006-R 154-UAR42-E	Connector, USB Type A	Assmann Kobiconn	Digikey Mouser	AE9924-ND 154-UAR42-E
J2	1	538-22-28-4083	Connector, 8 way SIL header 0.1"	Molex	Mouser	22-28-4083
J4	1	TSHSM-110-D-02-T-H-AP-TR-P-LF 10995 TSM-110-01-S-DH-A-P-TR TSM-110-01-L-DH-A-P-TR TSM-110-01-T-DH-A-P-TR	Connector, 20 way dual header r/a SMT with placement cap	ML Electronics / 4ucon / Samtec	ML Electronics / 4ucon	TSHSM-110-D-02-T-H-AP-TR-P-LF 10995
J5	1	PJ-014D-SMT	Connector, DC Jack SMT 1.3x3.8mm	CUI	Digikey	CP-014DPJTR-ND
J6, J7	2	54819-0572	Connector, USB Mini-B SMT 5pin	Molex	Mouser	538-54819-0572

Table C-1. LM3S3748 Bill of Materials (Continued)

Reference	Qty	Part Number	Description	Mfg	Supplier	Stock No.
L1, L2	2	CBC2012T4R7M	Inductor 4.7uH 360mA 0805 Chip Inductor	Taiyo Yuden	Digikey	587-1602-1-ND
LED1, LED3	2	LTST-C171GKT	LED, 0805 SMT Green	LiteOn	Mouser / Arrow	LTST-C171GKT
LED2, LED4	2	LTST-C171EKT	LED, 0805 SMT Red	LiteOn	Mouser / Arrow	LTST-C171EKT
P1	1	2908-05WB-MG	Connector, Micro SD card, push-push SMT	3M	Mouser	517-2908-05WB-MG
Q1, Q2, Q3	3	FDG6322C	Mosfet, P-N Channel Complementary Pair 25V SC70-6	Fairchild	Digikey	FDG6322CTR-ND
R1	1	ERJ-3GEYJ105V	Resistor 1M Ohms 5% 0603	Panasonic	Digikey	P1.0MGCT-ND
R12, R14, R15, R38, R39	5	ERJ-3EKF1003V	Resistor 100K 1% 0603	Panasonic	Digikey	P100KHCT-ND
R13	1	ERJ-3EKF1203V	Resistor 120K 1% 0603	Panasonic	Digikey	P120KHCT-ND
R18, R19, R20, R21, R28	5	ERJ-3GEYJ331V	Resistor 330 ohms 5% 0603	Panasonic	Digikey	P330GCT-ND
R2, R16, R17, R23, R31	5	ERJ-3GEYJ103V	Resistor, 10K 5% 0603	Panasonic	Digikey	P10KGCT-ND
R22	1	ERJ-3GEYJ470V	Resistor 47 Ohms 5% 0603	Panasonic	Digikey	P47GCT-ND
R24, R27, R42	3	ERJ-3GEYJ152V	Resistor, 1.5K 5% 0603	Panasonic	Digikey	P1.5KGCT-ND
R25, R26, R32, R33, R34, R35, R36	7	ERJ-3GEYJ270V	Resistor 27 Ohms 5% 0603	Panasonic	Digikey	P27GCT-ND
R29, R30, R37	3	ERJ-3GEYJ472V	Resistor 4.7K 5% 0603	Panasonic	Digikey	P4.7KGCT-ND
R3	1	ERJ-3EKF9101V	Resistor 9.10K 1% 0603	Panasonic	Digikey	P9.1KHCT-ND
R4, R5, R6, R7	4	ERA-3AEB104V	Resistor 100K 0.1% 25ppm 0603	Panasonic	Digikey	P100KDBTR-ND
R8, R9, R10, R11	4	ERA-3AEB103V	Resistor 10K 0.1% 25ppm 0603	Panasonic	Digikey	P10KDBTR-ND
SPK1	1	NDT-03C	Speaker, 8 ohm 0.3W Surface mount	Star Micronics	Hawk	NDT-03C
SW2a	1	TPA511GLFS	Switch, 4-way Navigation SMT w/select	C&K	Digikey	401-1130-2-ND
SW2b	1	BOUTON TPA	Cap for Nav Switch, Black	C&K	Digikey	401-1997-ND

Table C-1. LM3S3748 Bill of Materials (Continued)

Reference	Qty	Part Number	Description	Mfg	Supplier	Stock No.
SW1	1	B3S-1000P	Switch, Momentary Tact 160gmf 6mm	Omron	Arrow / Future	SW415-ND
U1	1	LM3S3748	IC, Microcontroller ARM Cortex TQFP-100	Luminary	Luminary	LM3S3748
U2	1	FAN4174IS5X_NL	IC, Op-amp Rail-to-Rail SOT23-5	Fairchild	Mouser	512-FAN4174IS5X
U3a	1	KWH015C04-F01	LCD Module 128x128 1.5" CTN	Formike Display	Wan Display	KWH015C04-F01
U3b	1	SFW20R-2STE1LF	Connector, 20 way 1mm ZIF flat-flex connector	FCI	Digikey	609-1914-2-ND
U4	1	CAT93C46YI-G / AT93C46A-10TU-2.7	Serial Eeprom 1Kbit TSSOP8	Catalyst Atmel	Mouser Digikey	CAT93C46YI-G
U5	1	FT2232D	IC, USB to Serial Interface TQFP48	Ftdi	Ftdi	FT2232D
U6	1	LC4032V-75TN48C	IC, CPLD 32 macro-cell TQFP48	Lattice	Arrow	LC4032V-75TN48C
U7	1	TPS2051BDGN	IC, Fault protected power switch TSSOP8	TI	Digikey	296-17313-1-ND
U8	1	PQ1LA333MSPQ	IC, Voltage regulator 3.3V 500mA SOT89-5	Sharp	Mouser	852-PQ1LA333MSPQ
U9	1	FSUSB11MTCX	IC, Full-speed USB switch TSSOP-14	Fairchild	Digikey Mouser	512-FSUSB11MTCX
Y1	1	NX8045GB-8.000000MHZ	Crystal, 8.00MHz 8.0x4.5mm SMT	NDK	Digikey	644-1018-2-ND
Y2	1	HCM49-4.194304MABJT	Crystal, 4.194304MHz HC49US SMT	Citizen	Mouser / Digikey	695-HCM49-419-U 300-8529-1-ND
Y3	1	FOXSDLF/060-20	Crystal, 6.00MHz HC49US SMT	Fox	Mouser / Digikey	559-FOXSDLF/060-20 631-1008-2-ND
	1	EK-LM3S3748-A	PCB, FR-4 4-layer Rev A	Advanced	Advanced	EK-LM3S3748
	3	3M 4949	Tape, VHB Foam Double coat 45mil 0.25" x 1.25" cut piece	3M	Uline	S-10144
	1	DI002860	Adhesive label for speaker LMI logo 0.5"x0.5"	Drake	Drake	DI002860
SW3	1	SSSS820201 CUS22-TB	Slide Switch SMT verticle SPCO	Alps Copal	Mouser Digikey	688-SSSS820201 563-1105-1-ND
R40, JP33	2	ERJ-3GEY0R00V	Resistor 0 Ohms 0603	Panasonic	Digikey	P0.0GTR_ND
		Do not populate	J3 (0.05" JTAG header), R41, R43, BAT1			

A P P E N D I X D

Connection Details

This appendix contains the following sections:

- I/O Breakout Pads (see page 39)
- DC Power Jack (see page 40)
- ARM Target Pinout (see page 40)
- Oscilloscope Header Pinout (see page 40)

I/O Breakout Pads

The LM3S3748 EVB has 55 I/O pads and 13 power pads for a total of 68 pads. Connection can be made by soldering wires directly to these pads, or by using 0.1" pitch headers and sockets.

NOTE: In Table D-1, an asterisk (*) by a signal name (also on the EVB PCB) indicates the signal is typically used for on-board functions. Normally, you should cut the associated jumper (JP1-30) before using an assigned signal for external interfacing.

Table D-1. I/O Breakout Pads

Description	Pad No.	Description	Pad No.	Description	Pad No.	Description	Pad No.
GND	34	PB7/NMI *	33	GND	68	DBG+5V	67
PH0/CCP6	32	GND	31	+VBUS	66	PA3/SSI0FSS	65
PB6/C0+ *	30	PB4/C0- *	29	PB5/C1- *	64	PH2/FAULT3 *	63
PE2/SSI1RX	28	PE3/SSI1TX	27	PC2/TDI *	62	PC3/TDO/SWO*	61
PD4/ADC7	26	PD5/ADC6	25	PH1/CCP7	60	PA0/U0RX *	59
PD6/ADC5	24	PD7/ADC4	23	PE1/SSI1FSS	58	GND	57
PE7/ADC0 *	22	PE6/ADC1 *	21	PB2/I2C0SCL	56	PE0/SSI1CLK	55
PE5/ADC2 *	20	PE4/ADC3 *	19	GND	54	PG0/PWM4 *	53
PD0/IDX0	18	PD1/PHA0	17	PB3/I2C0SDA*	52	PG3/FAULT2 *	51
PD2/CCP5	16	PD3/CCP0	15	PF1/PWM1 *	50	+3.3V	49
PG2 *	14	PG1/PWM5 *	13	PF3/PWM3 *	48	PF2/PWM2 *	47
PC7/U1TX	12	PC6/U1RX	11	VBAT	46	PF2/FAULT0	45
PC5/C1+ *	10	PC4/CCP4 *	9	GND	44	GND	43
PA1/U0TX *	8	PA2/SSI0CLK*	7	GND	42	PF0/PWM0 *	41
PA4/SSI0RX	6	PA5/SSI0TX *	5	PF6/CCP1	40	PF5/CCP2	39
PA6/I2C1SCL	4	PA7/I2C1SDA	3	PG4/CCP3 *	38	PF7/PHB0	37
PG7/PWM7 *	2	GND	1	PG6/PWM6 *	36	PG5/FAULT1 *	35

DC Power Jack

The EVB provides a DC power jack for connecting an external +5V regulated (±5%) power source as shown in Figure D-1.

Figure D-1. DC Power Jack

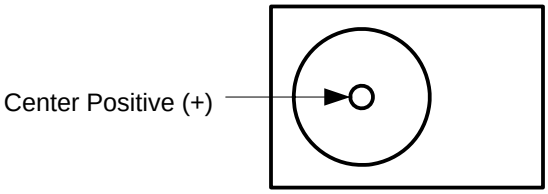

The socket is 3.5 mm dia with a 1.3 mm pin. Suitable plugs include CUI PP3-002D.

ARM Target Pinout

In ICDI input and output mode, the LM3S3748 Evaluation Kit supports ARM's standard 20-pin JTAG/SWD configuration. The same pin configuration can be used for debugging over serial-wire debug (SWD) and JTAG interfaces (see Table D-2).

Table D-2. ARM Target Pinout

Function	Pin	Pin	Function
VCC (optional)	1	2	nc
nc	3	4	GND
TDI	5	6	GND
TMS	7	8	GND
TCK	9	10	GND
nc	11	12	GND
TDO	13	14	GND
nc	15	16	GND
nc	17	18	GND
nc	19	20	GND

Oscilloscope Header Pinout

Table D-3 shows the header pinout for the oscilloscope.

Table D-3. Oscilloscope Header Pinout

Pad No.	Description	Test Wiring
1	Test Point 1	Wire this pair
2	Channel 1 +	

Table D-3. Oscilloscope Header Pinout (Continued)

Pad No.	Description	Test Wiring
3	Channel 1-	Wire this pair
4	GND	
5	Test Point 2	Wire this pair
6	Channel 2 +	
7	Channel 2 -	Wire this pair
8	GND	

APPENDIX E

References

In addition to this document, the following references are included on the Stellaris LM3S3748 Evaluation Kit documentation CD-ROM and are also available for download at www.ti.com/stellaris:

- *Stellaris LM3S3748 Evaluation Kit Quickstart Guide* for appropriate tool kit (see "Kit Contents," on page 11)
- *Stellaris LM3S3748 Evaluation Kit Read Me First*
- *StellarisWare Driver Library User's Guide*, publication number SW-DRL-UG
- *Stellaris LM3S3748 Microcontroller Data Sheet*, publication DS-LM3S3748

Additional references include:

- *Formike Electronic KWH015C04-F01 LCD Display Data Sheet*
- *Sitronix ST7637 Color LCD Controller/Driver Data Sheet*
- *Future Technology Devices Incorporated FT2232D Data Sheet*
- Information on development tool being used:
  - RealView MDK web site, www.keil.com/arm/rvmdkkit.asp
  - IAR Embedded Workbench web site, www.iar.com
  - Code Sourcery GCC development tools web site, www.codesourcery.com/gnu_toolchains/arm
  - Code Red Technologies development tools web site, www.code-red-tech.com
  - Texas Instruments' Code Composer Studio™ IDE web site, www.ti.com/ccs

IMPORTANT NOTICE

Texas Instruments Incorporated and its subsidiaries (TI) reserve the right to make corrections, modifications, enhancements, improvements, and other changes to its products and services at any time and to discontinue any product or service without notice. Customers should obtain the latest relevant information before placing orders and should verify that such information is current and complete. All products are sold subject to TI's terms and conditions of sale supplied at the time of order acknowledgment.

TI warrants performance of its hardware products to the specifications applicable at the time of sale in accordance with TI's standard warranty. Testing and other quality control techniques are used to the extent TI deems necessary to support this warranty. Except where mandated by government requirements, testing of all parameters of each product is not necessarily performed.

TI assumes no liability for applications assistance or customer product design. Customers are responsible for their products and applications using TI components. To minimize the risks associated with customer products and applications, customers should provide adequate design and operating safeguards.

TI does not warrant or represent that any license, either express or implied, is granted under any TI patent right, copyright, mask work right, or other TI intellectual property right relating to any combination, machine, or process in which TI products or services are used. Information published by TI regarding third-party products or services does not constitute a license from TI to use such products or services or a warranty or endorsement thereof. Use of such information may require a license from a third party under the patents or other intellectual property of the third party, or a license from TI under the patents or other intellectual property of TI.

Reproduction of TI information in TI data books or data sheets is permissible only if reproduction is without alteration and is accompanied by all associated warranties, conditions, limitations, and notices. Reproduction of this information with alteration is an unfair and deceptive business practice. TI is not responsible or liable for such altered documentation. Information of third parties may be subject to additional restrictions.

Resale of TI products or services with statements different from or beyond the parameters stated by TI for that product or service voids all express and any implied warranties for the associated TI product or service and is an unfair and deceptive business practice. TI is not responsible or liable for any such statements.

TI products are not authorized for use in safety-critical applications (such as life support) where a failure of the TI product would reasonably be expected to cause severe personal injury or death, unless officers of the parties have executed an agreement specifically governing such use. Buyers represent that they have all necessary expertise in the safety and regulatory ramifications of their applications, and acknowledge and agree that they are solely responsible for all legal, regulatory and safety-related requirements concerning their products and any use of TI products in such safety-critical applications, notwithstanding any applications-related information or support that may be provided by TI. Further, Buyers must fully indemnify TI and its representatives against any damages arising out of the use of TI products in such safety-critical applications.

TI products are neither designed nor intended for use in military/aerospace applications or environments unless the TI products are specifically designated by TI as military-grade or "enhanced plastic." Only products designated by TI as military-grade meet military specifications. Buyers acknowledge and agree that any such use of TI products which TI has not designated as military-grade is solely at the Buyer's risk, and that they are solely responsible for compliance with all legal and regulatory requirements in connection with such use.

TI products are neither designed nor intended for use in automotive applications or environments unless the specific TI products are designated by TI as compliant with ISO/TS 16949 requirements. Buyers acknowledge and agree that, if they use any non-designated products in automotive applications, TI will not be responsible for any failure to meet such requirements.

Following are URLs where you can obtain information on other Texas Instruments products and application solutions:

Products		**Applications**	
Amplifiers	amplifier.ti.com	Audio	www.ti.com/audio
Data Converters	dataconverter.ti.com	Automotive	www.ti.com/automotive
DLP® Products	www.dlp.com	Communications and Telecom	www.ti.com/communications
DSP	dsp.ti.com	Computers and Peripherals	www.ti.com/computers
Clocks and Timers	www.ti.com/clocks	Consumer Electronics	www.ti.com/consumer-apps
Interface	interface.ti.com	Energy	www.ti.com/energy
Logic	logic.ti.com	Industrial	www.ti.com/industrial
Power Mgmt	power.ti.com	Medical	www.ti.com/medical
Microcontrollers	microcontroller.ti.com	Security	www.ti.com/security
RFID	www.ti-rfid.com	Space, Avionics & Defense	www.ti.com/space-avionics-defense
RF/IF and ZigBee® Solutions	www.ti.com/lprf	Video and Imaging	www.ti.com/video
		Wireless	www.ti.com/wireless-apps

Mailing Address: Texas Instruments, Post Office Box 655303, Dallas, Texas 75265
Copyright © 2010, Texas Instruments Incorporated