*Test Report: PMP21529*

# *4-Switch Buck-Boost Bi-directional DC-DC Converter Reference Design*

## Description

The PMP21529 is 4-switch buck-boost bi-directional DC-DC power converter for use in battery backup power applications. During normal operation, the PMP21529 works as a battery charger. When DC bus power loss, the PMP21529 immediately changes to backup operation to provide power to the system. Once DC bus power recovers, the PMP21529 automatically switches back to battery charge mode. The battery voltage can be higher or lower than DC bus voltage. Depends on DC bus and battery voltage, the PMP21529 operates as either a synchronize buck or a synchronize boost converter in which only two switches are switching, the switching loss is reduced to a half. Only when DC bus and battery voltage are close to each other then the converter operates as a synchronize buck-boost converter where all the four switching are switching. The PMP21529 achieves 97.7% efficiency as a result of this multi-mode control.

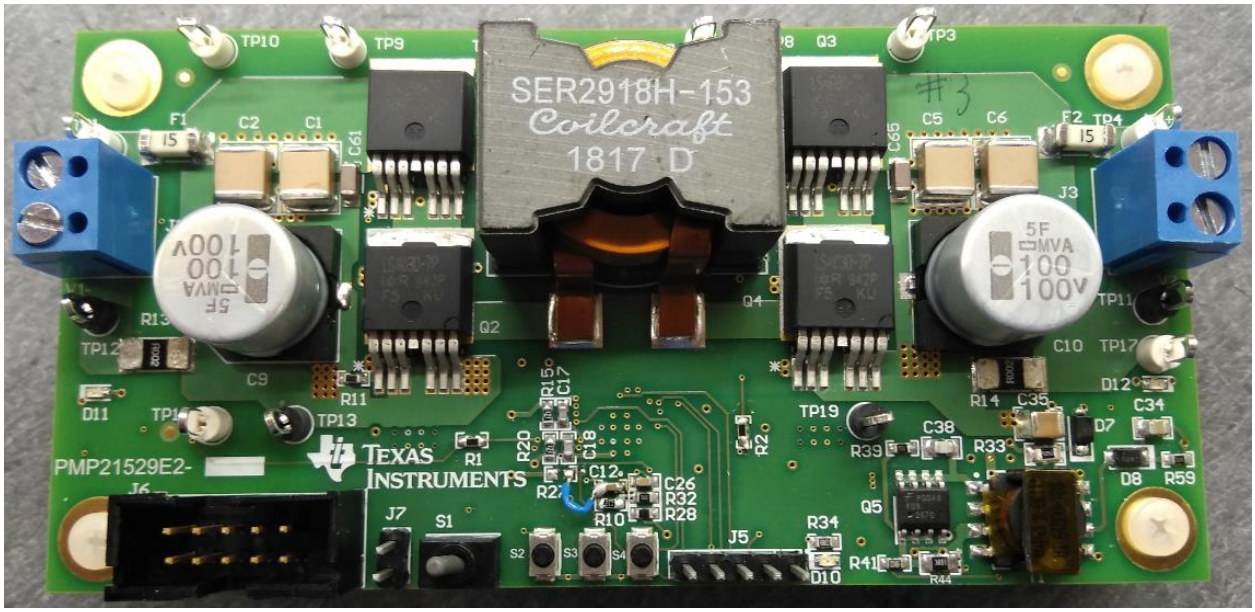


**Figure 1. PMP21529 Reference Design**

An IMPORTANT NOTICE at the end of this TI reference design addresses authorized use, intellectual property matters and other important disclaimers and information.



Copyright © 2018, Texas Instruments Incorporated

# 1 Block Diagram

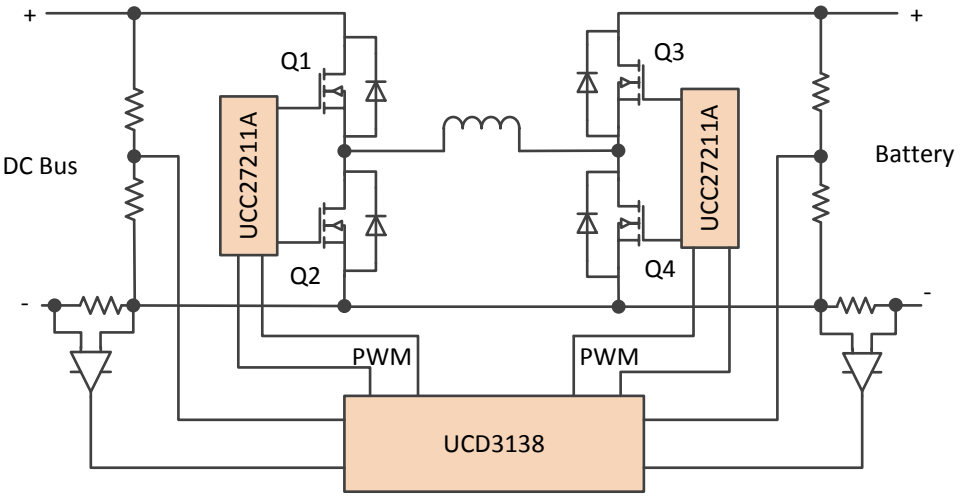


**Figure 2. Block Diagram of PMP21529**

# 2 Typical Applications

- Local Energy Storage (LES) Systems
- Battery Backup Units (BBU)
- DC-DC Non-Isolated Brick Modules

# 3 Features

- Multi-mode Control to Reduce Switching Loss and Achieve High Efficiency
- Built-In Battery Charging CC-CV-Topping Algorithm Compatible for Li-Ion and Li-Poly Batteries
- Ultra-Fast Changeover From Charging to Backup Supply Mode Enables Seamless Power Transfer During Power Failure
- DC Bus voltage Can be Higher or Lower Than Battery Voltage
- Battery Over Voltage and Over Current Protection
- DC Bus Over Voltage Protection
- UCD3138 Digital Power Supply Controller Solution Enables Programmability and Configurability for Future Update


Copyright © 2018, Texas Instruments Incorporated

## 4 Performance Specifications

| Parameter | Symbol | Test Conditions | Min | Nom | Max | Unit |
|---|---|---|---|---|---|---|
| **BATTERY CHARGER MODE** | | | | | | |
| Input Conditions | | | | | | |
| Input voltage (bus voltage) | $V_{BUS}$ | | 35 | | 55 | V |
| Output Conditions | | | | | | |
| Output voltage (battery voltage) | $V_{BAT}$ | | 38 | | 55 | V |
| OVP (battery voltage) | $V_{BAT_OVP}$ | | | 57 | | V |
| Topping charge threshold | $V_{BAT_TOP}$ | | | 53 | | V |
| Output current (battery current) | $I_{BAT}$ | | | 2 | | A |
| OCP (battery current) | $I_{BAT_OCP}$ | | | 7 | | A |
| Output power | $P_{BAT}$ | | | 110 | | W |
| **BACKUP SUPPLY MODE** | | | | | | |
| Input Conditions | | | | | | |
| Input voltage (battery voltage) | $V_{BAT}$ | | 38 | | 55 | V |
| Brownout voltage (battery voltage) | $V_{BAT_UVLO}$ | | | 38 | | V |
| Output Conditions | | | | | | |
| Output voltage (bus voltage) | $V_{BUS}$ | | | $V_{BUS_NOMINALI} - 0.5$ | | V |
| OVP (bus voltage) | $V_{BUS_OVP}$ | | | $V_{BUS_NOMINAL} + 5$ | | V |
| Output current (bus current) | $I_{BUS}$ | | | | 10 | A |
| Output power peak | $P_{BUS}$ | | | | 500 | W |



Copyright © 2018, Texas Instruments Incorporated

## 5 System Overview

Battery backup and power storage systems find a role in a lot of industrial applications like uninterruptible power systems (UPSs), servers, and telecom rectifiers to power line communication (PLC) systems. These applications use a wide variety of energy storage elements like super capacitors, lead acid batteries, and li-Ion and li-poly batteries.

A typical battery backup or energy storage bank has the following subsystems:

1. A battery charger subsystem to charge the battery from a power source.

2. A battery discharge subsystem to power a load from the battery.

3. A battery management solution (BMS) system to monitor and protect the battery.

The block diagram of a typical battery backup system is shown in Figure 3.

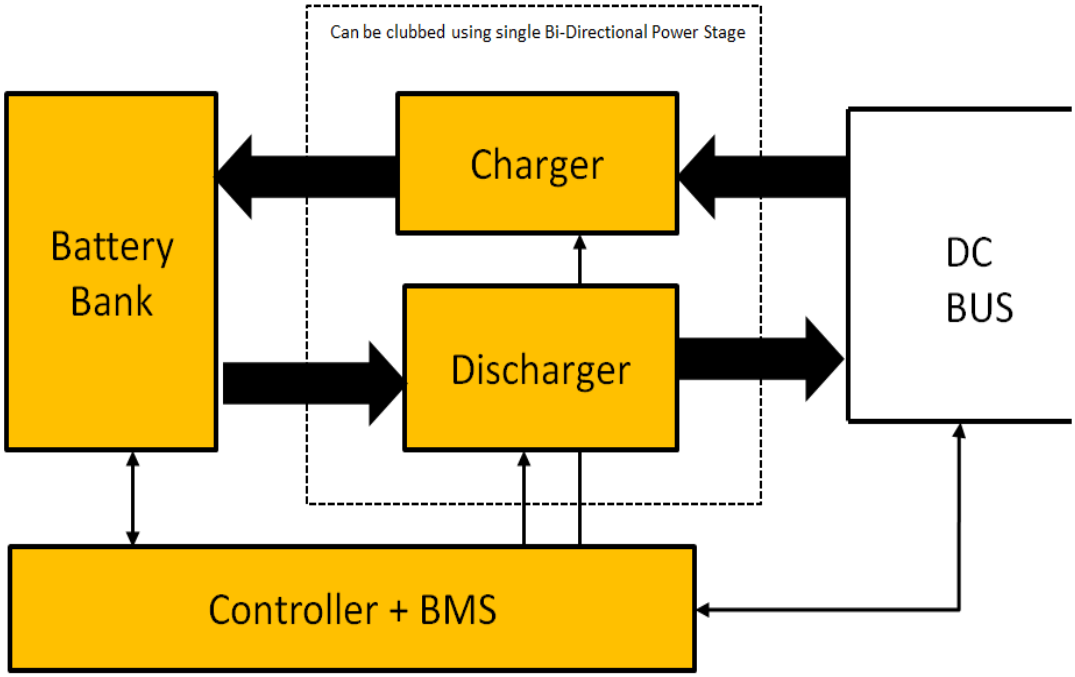


**Figure 3. Block Diagram of Typical Battery Backup System**

The battery charger subsystem draws power from the DC bus and charges the battery bank. The battery discharge subsystem takes power from the battery bank and feeds it back into the DC bus.

Under normal operating conditions, the battery backup system draws power from the DC bus to charge the battery bank and the battery discharge system remains inactive. Upon power failure at the DC bus input, the battery discharge system begins to immediately feed power into the DC bus. During this time the battery charger system remains inactive.

One way of decreasing the cost and size of the battery backup subsystem is to use a single, bidirectional power converter for doing both battery charging and backup power supply operation. When compared with the traditional arrangement of implementing battery backup systems using two individual power stages, a single bidirectional power stage implementation significantly reduces the number of components.

An additional benefit to using a single, bidirectional power stage is that the mode transition from charging to discharging can be achieved very quickly, which can reduce the bulk capacitor (holdup time) requirement at the DC bus.


Copyright © 2018, Texas Instruments Incorporated

There are many topologies can be used for battery backup subsystem. The battery voltage has a wide range from minimum charge to full charge. For better efficiency, the battery pack should be chosen such that the battery nominal voltage equals DC bus voltage. This means the charger's output voltage is lower than input voltage when battery is minimum charged, and is higher than input voltage when battery is fully charged. Thus the charger needs to provide buck function when battery is minimum charged, and boost function when battery is fully charged. When it operates at backup mode, on the other hand, the converter needs to provide boost function when battery is fully discharged, and buck function when battery is minimum discharged.

The PMP21529 design is such a bidirectional DC-DC power converter specifically designed for battery backup system where battery voltage range crosses DC bus voltage.

The design can charge li-ion battery pack from a DC bus. When the main power goes down, the device seamlessly transfers power to DC bus from the li-ion battery pack. The design is based on the UCD3138 digital controller controlled 4-swith buck boost power stage. Depends on DC bus and battery voltage, the converter works as a synchronous buck, or a synchronous boost converter, in which only two switches are switching, the switching loss is reduced to a half. Only when DC bus and battery voltage are very close then the converter operates as a buck-boost converter where all the four switching are switching.

The 4-switch bridge power stage is implemented with high-drive current, fast-switching gate driver UCC27211A, and IPB180N08S402ATMA1 Power MOSFET. The design operates at 140kHz.

# 6 Operating Principle

## *6.1 Charge Mode: When DC Bus voltage > Battery Voltage*

In battery charge mode, when DC bus voltage is higher than battery voltage, Q3 is fully turned on and Q4 is fully turned off. Q1 and Q2 are controlled by D and 1-D, respectively, the converter becomes a synchronize buck converter, as shown in Figure 4.

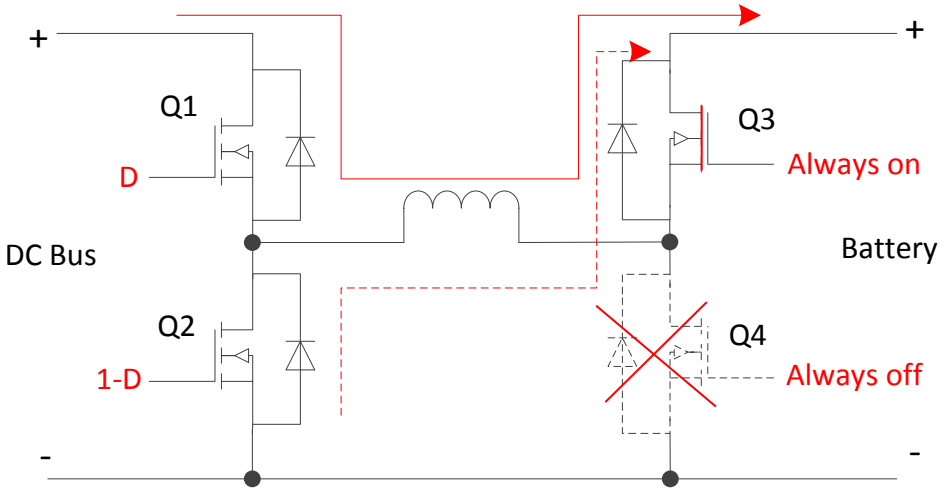


**Figure 4. Synchronize Buck in Charge Mode**

## *6.2 Charge Mode: When DC Bus voltage < Battery Voltage*

In battery charge mode, when DC bus voltage is lower than battery voltage, Q1 is fully turned on and Q2 is fully turned off. Q4 and Q3 are controlled by D and 1-D, respectively, the converter becomes a synchronize boost converter, as shown in Figure 5.


Copyright © 2018, Texas Instruments Incorporated

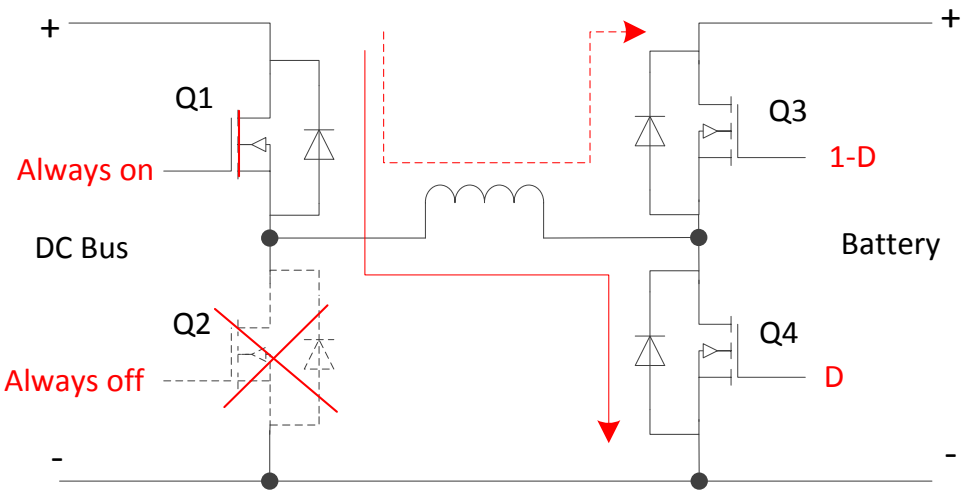


**Figure 5. Synchronize Boost in Charge Mode**

### *6.3 Charge Mode: When DC Bus voltage ≈ Battery Voltage*

In battery charge mode, when DC bus voltage is close to battery voltage, Q1 and Q4 are controlled by D, Q2 and Q3 are controlled by 1-D. The converter becomes a synchronize buck-boost converter, as shown in Figure 6.

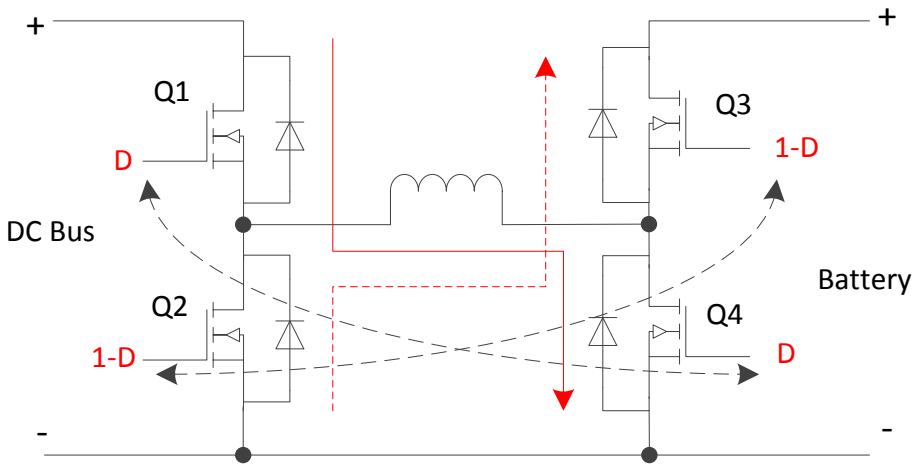


**Figure 6. Synchronize Buck-Boost in Charge Mode**

### *6.4 Backup Mode: When DC Bus voltage > Battery Voltage*

In backup mode, when DC bus voltage is higher than battery voltage, Q3 is fully turned on and Q4 is fully turned off. Q2 and Q1 are controlled by D and 1-D, respectively, the converter becomes a synchronize boost converter, as shown in Figure 7.


Copyright © 2018, Texas Instruments Incorporated

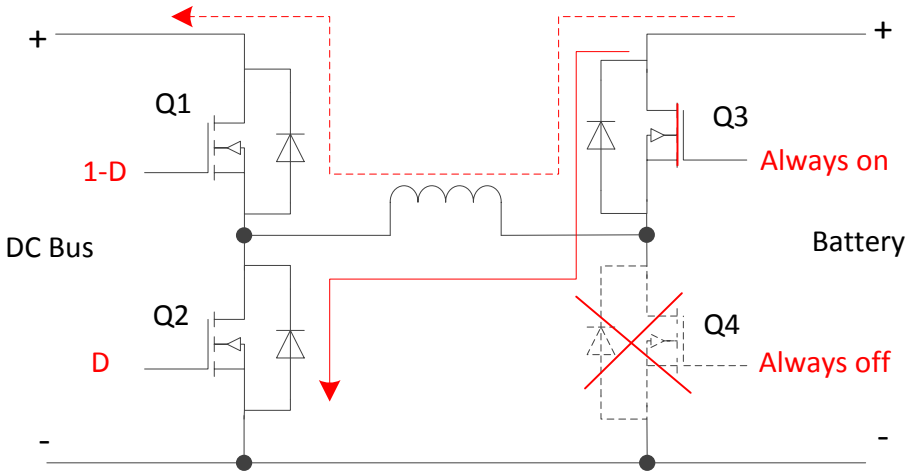


**Figure 7. Synchronize Boost in Backup Mode**

### *6.5 Backup Mode: When DC Bus voltage < Battery Voltage*

In backup mode, when DC bus voltage is lower than battery voltage, Q1 is fully turned on and Q2 is fully turned off. Q3 and Q4 are controlled by D and 1-D, respectively, the converter becomes a synchronize buck converter, as shown in Figure 8.

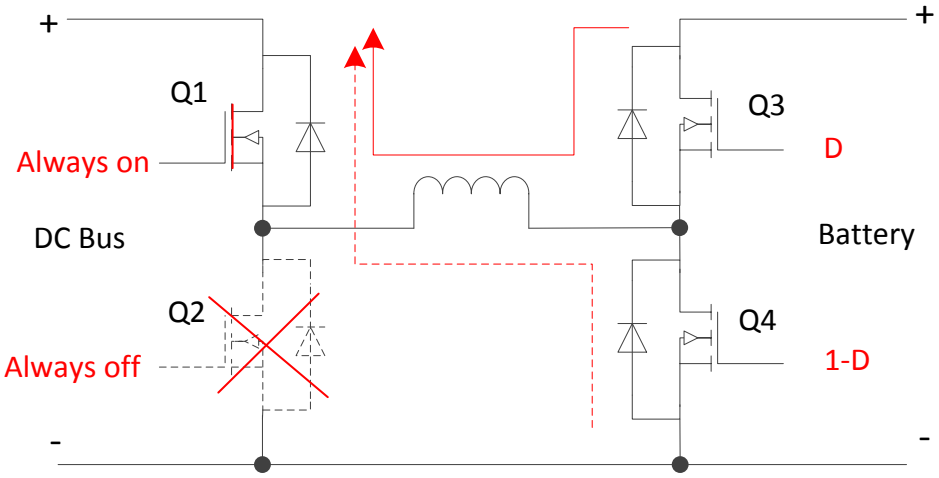


**Figure 8. Synchronize Buck in Backup Mode**

### *6.6 Backup Mode: When DC Bus voltage ≈ Battery Voltage*

In backup mode, when DC bus voltage is close to battery voltage, Q2 and Q3 are controlled by D, Q1 and Q4 are controlled by 1-D. The converter becomes a synchronize buck-boost converter, as shown in Figure 9.


Copyright © 2018, Texas Instruments Incorporated

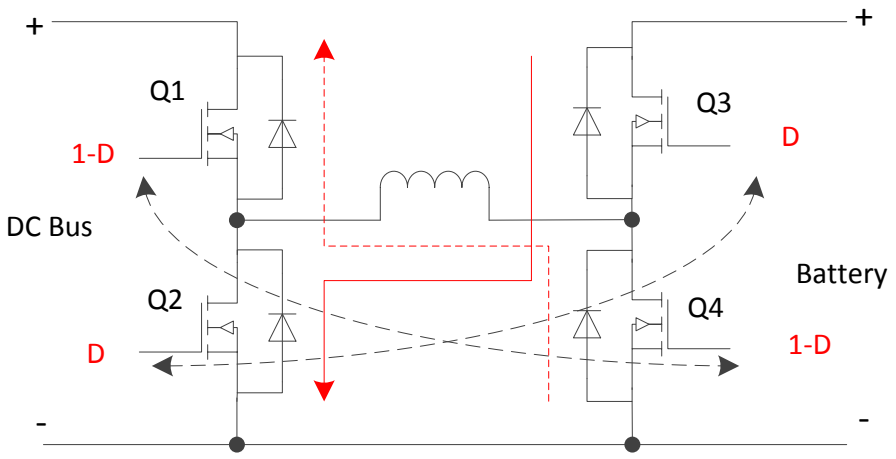


**Figure 9. Synchronize Buck-Boost in Backup Mode**

### *6.7 Operation mode vs. DC Bus and battery voltage*

In both battery charge and backup mode, the 4-switch power stage changes its operation mode according to DC Bus and battery voltage, as shown in Figure 10. To prevent mode from bouncing, hysteresis is added between the buck and buck-boost modes and between the buck-boost and boost modes.

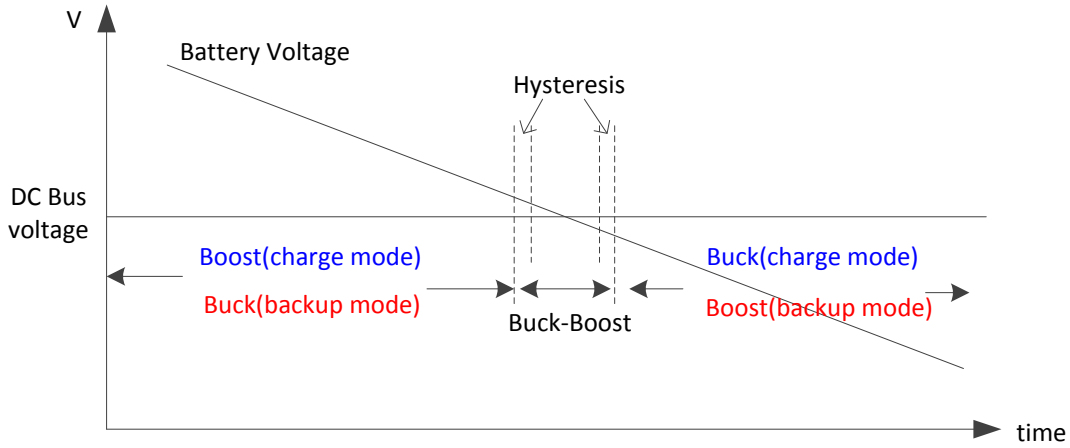


**Figure 10. Operation modes vs. DC Bus and battery voltage**

### *6.8 Battery Charge Principle*

PMP21529 is designed for using Li-Ion battery. Chargers for Li-Ion batteries must operate in Constant Current (CC) or Constant Voltage (CV) modes. Initial charging is at a constant current and the battery terminal voltage increases steadily to almost full voltage. At this point the battery is about 85% charged. This part of the cycle takes about 40% of the total cycle time. The charger then changes to constant voltage to supply the remaining 20% or so of charge. Full charge is reached when the current decreases to between 3 and 5 percent of the rated current. There is no 'float' charging phase associated with this battery, instead a periodic top up charge is applied when the terminal voltage drops. Over charging can damage the battery. Figure 11 shows the voltage and current signature as Li-Ion passes through the stages for constant current, constant voltage and top up charge.


Copyright © 2018, Texas Instruments Incorporated

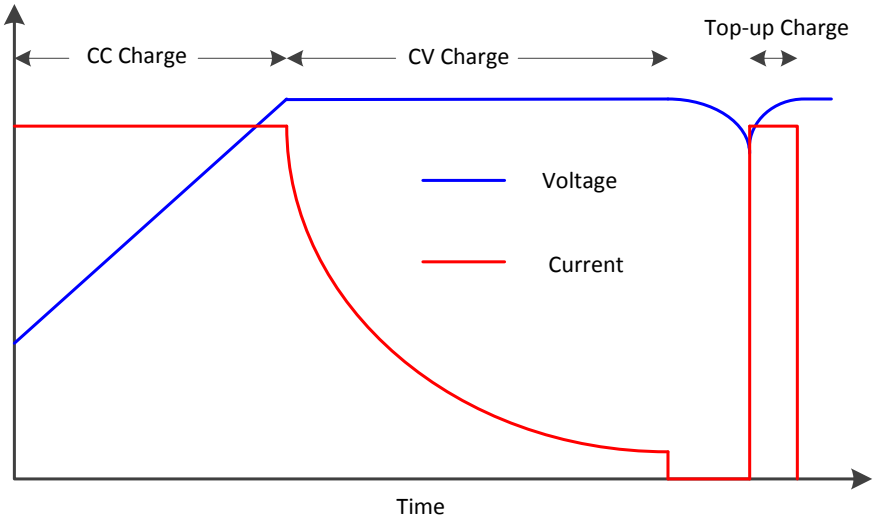


**Figure 11. Charge stages of lithium-ion**

# 7 Test PMP21529

## *7.1 Test Equipment*

**DC Voltage Source:** capable of 35V to 55VDC with minimum power rating 500 W, with current limit function and an on/off switch to turn on/off the power supply. The DC voltage source to be used should meet IEC60950 reinforced insulation requirement.

Note: Please make sure that output is not pulled down to ground when the power supply is turned off. This will affect the PMP21529 board's capability of providing backup. If such a power supply is not available then a switch can be connected in series as shown in Figure 12.

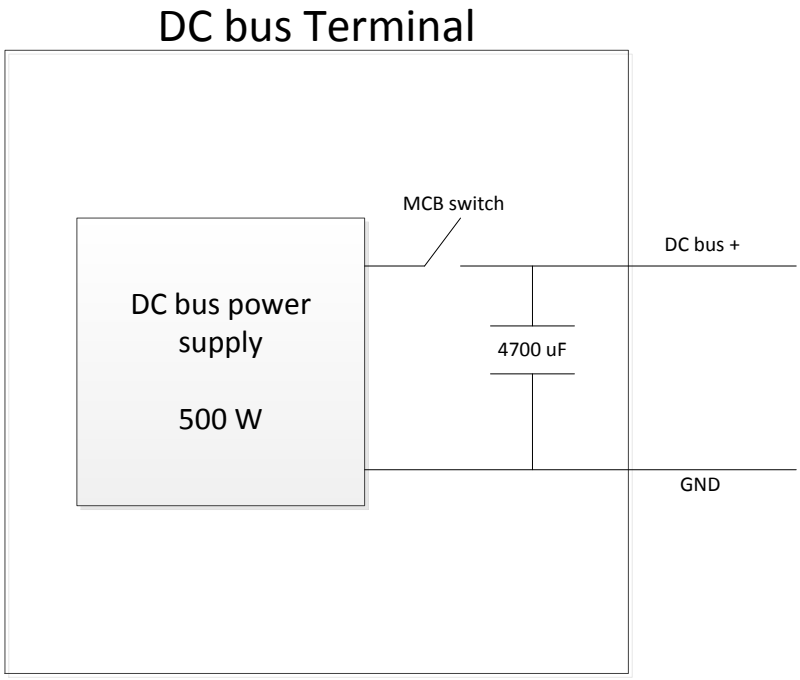


**Figure 12. DC bus power supply with external on/off switch**


Copyright © 2018, Texas Instruments Incorporated

**Battery:** A 13 cell Li-ion battery pack capable of delivering 10 A of current. If a battery pack is not available, then a battery pack can be emulated using a DC power supply and a load as shown in Figure 13. The DC power supply is capable of 35V to 55VDC with minimum power rating 600 W, with current limit function. The DC voltage source to be used should meet IEC60950 reinforced insulation requirement.

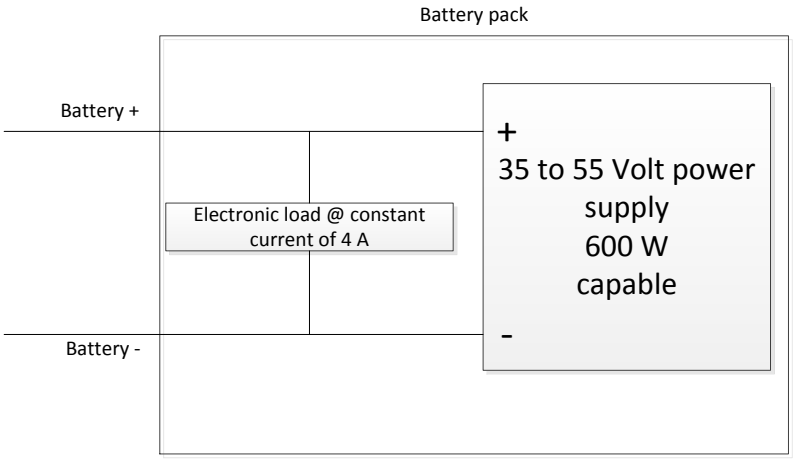


**Figure 13. Battery Pack**

**DC Digital Multimeter:** 2 units capable of 0 to 60 VDC input range, four digit display preferred.

**Electronics Load:** DC load capable of receiving 0 to 60 VDC, 0 to 10 A, and 0 to 500 W or greater,

**Current Meter:** DC, 1 unit, capable of 0 to 10 A.

**Oscilloscope:** capable of 500MHz full bandwidth, digital or analog, if digital 5Gs/s or better.

**Fan:** 200 to 500 LFM forced air cooling is required.

**Recommended Wire Gauge:** capable of 10 A, **with the length as short as possible**.

### *7.2 Test Set Up*

Figure 14 shows the setup recommendations for testing the PMP21529. The setup does not show the connections to the multimeters for measuring various voltages and currents. These can be connected by the user accordingly for testing efficiency.

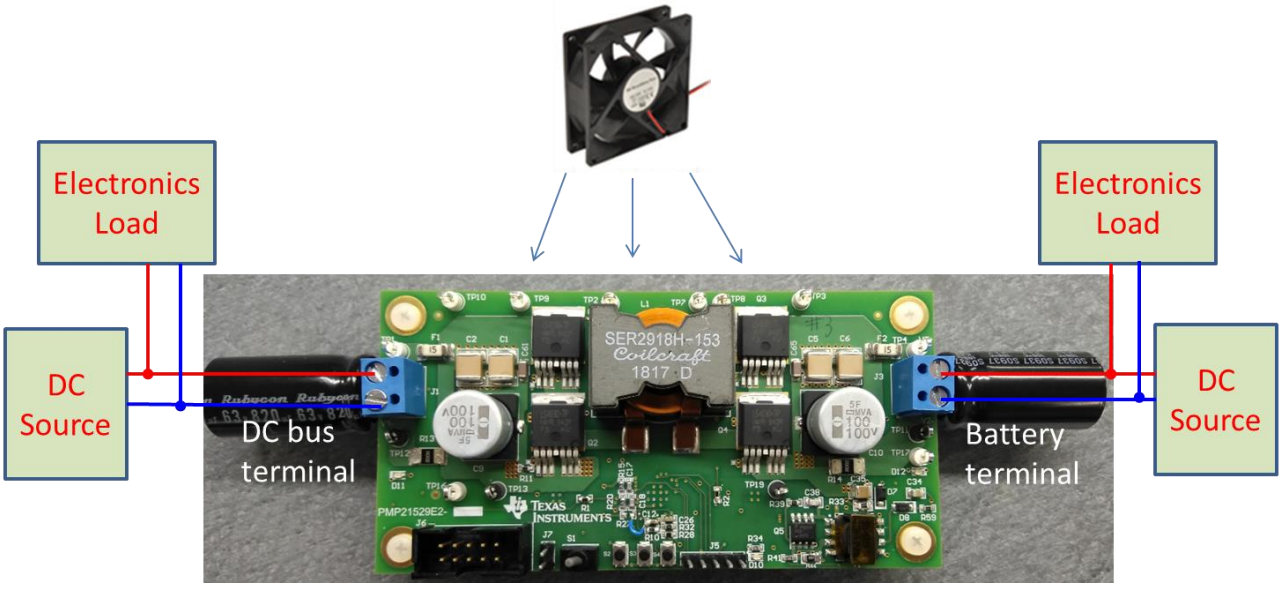



Copyright © 2018, Texas Instruments Incorporated

**Figure 14. Test Setup**

1. Add a 63V, 1200uF of higher value electrolytic capacitor to both DC bus terminal J1 and battery terminal J3 of PMP21529.
2. Connect the battery to the battery terminal J3 of PMP21529.
3. If the battery is not available, use an emulated battery as described in Figure 13: connect a DC supply to the battery terminal J3 of PMP21529. This DC supply is used to emulate the battery, will be called “battery supply” thereafter. Keep the supply turned off. Connect an electronic load in constant current mode to the battery input terminal J3 of PMP21529. The electronic load will be called as “battery load” thereafter. Keep the load turned off.
4. Connect another DC supply to the DC bus terminal J1 of PMP21529. It will be called “DC bus supply” thereafter. Keep the supply turned off.
5. Connect an electronic load in constant current mode to the DC bus terminal J1 of PMP21529. The electronic load represents the system load, will be called as “DC bus load” thereafter. Keep the load turned off.
6. Connect a DC fan and position it to PMP21529 board.

## 7.3 *Test Battery charging in CC mode*

**Turn on procedure:**

1. Turn on the fan.
2. Set the battery load to 3A, turn on the battery load.
3. Set battery supply to 50V, turn on the supply
4. Set the DC bus load to 5A, turn on the load
5. Set the DC bus supply to 48V, turn on the supply
6. Measure the current across the battery terminal, it should be positive at about 2A, the battery is charged at CC mode. Figure 15 is the typical waveform.


Copyright © 2018, Texas Instruments Incorporated

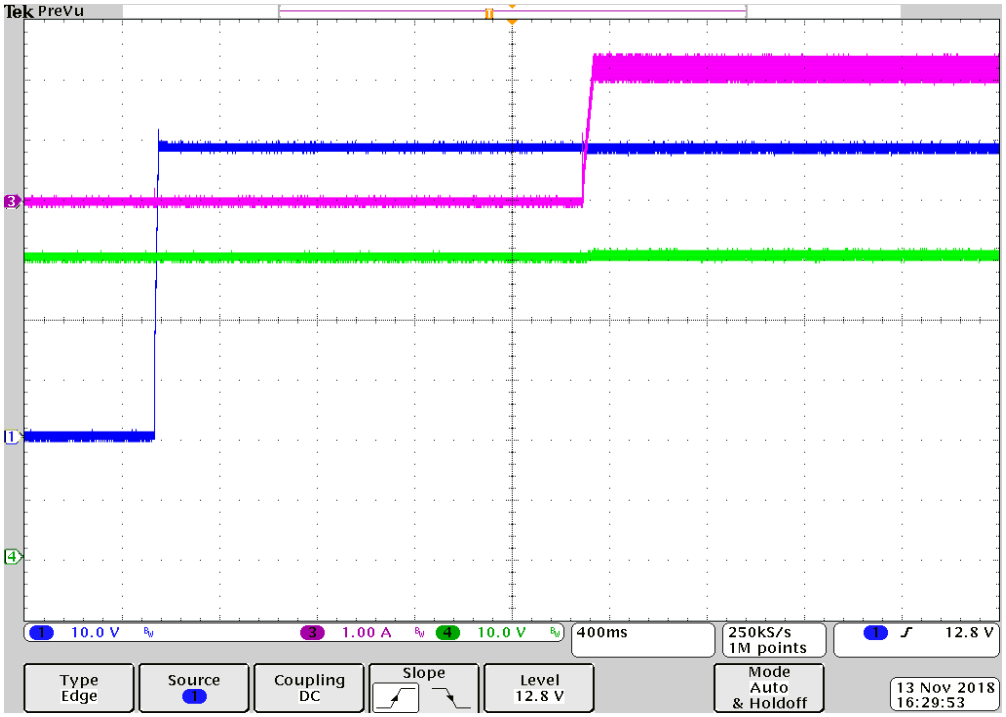


**Figure 15. Battery charging in CC mode. Ch1: DC bus voltage, Ch3: battery current, Ch4: battery voltage**

**Turn off procedure:**

7. Turn off DC bus supply
8. Turn off battery supply
9. Turn off DC bus load
10. Turn off battery load

## 7.4 *Test Battery charging in CV mode*

**Turn on procedure:**

1. Repeat section 7.3 step 1 to step 6.
2. Now slowly increase the battery voltage to be about 55V. Measure the current across the battery terminal, it should be reduced, the battery is charged at CV mode. Figure 16 is the typical waveform.


Copyright © 2018, Texas Instruments Incorporated

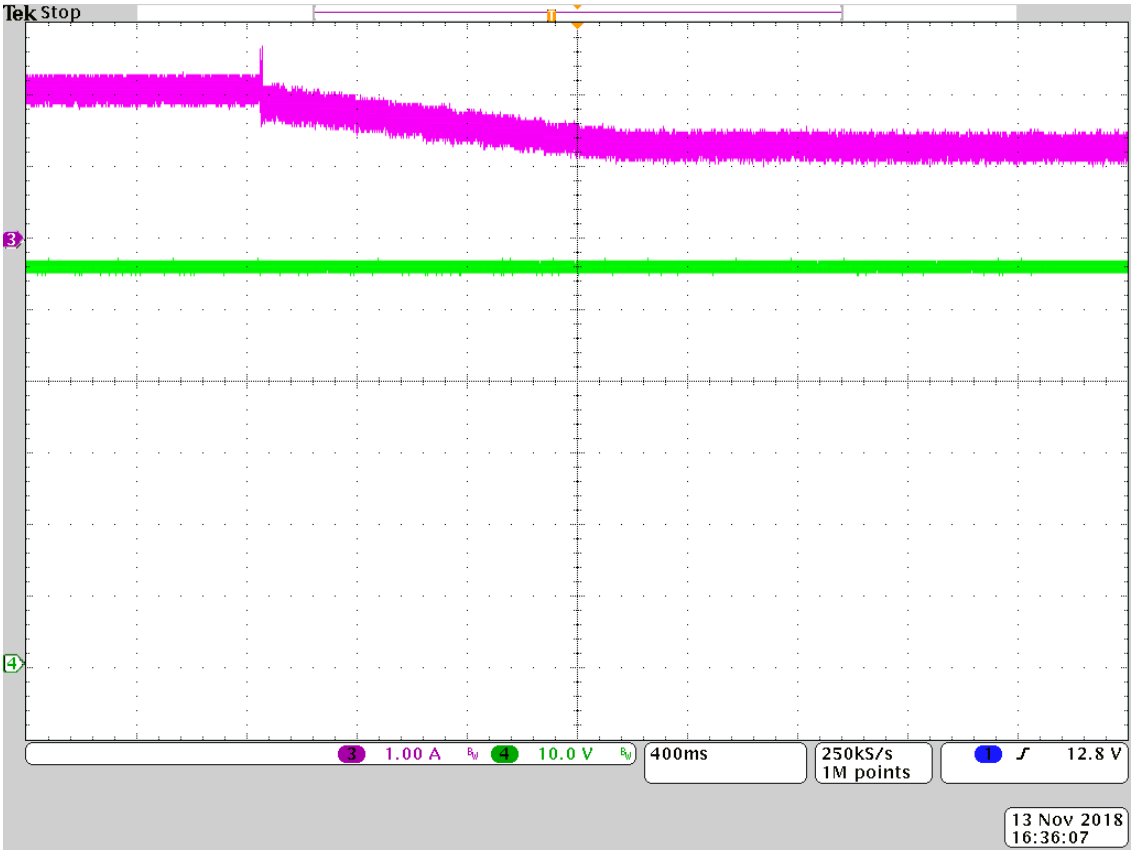


**Figure 16. Transition from CC to CV mode. Ch3: battery current, Ch4: battery voltage**

**Turn off procedure:**

3. Turn off DC bus supply
4. Turn off battery supply
5. Turn off DC bus load
6. Turn off battery load

## *7.5 Test Battery charging in Top up mode*

**Turn on procedure:**

1. Repeat section 7.3 step 1 to step 6.
2. Now increase the battery voltage a little bit more. Measure the current across the battery terminal, it should be reduced to 0A, the charger is turned off. Figure 17 is the typical waveform. Now slowly reduce the battery voltage to about 53V, the battery starts to be charging again, as shown in Figure 18.


Copyright © 2018, Texas Instruments Incorporated

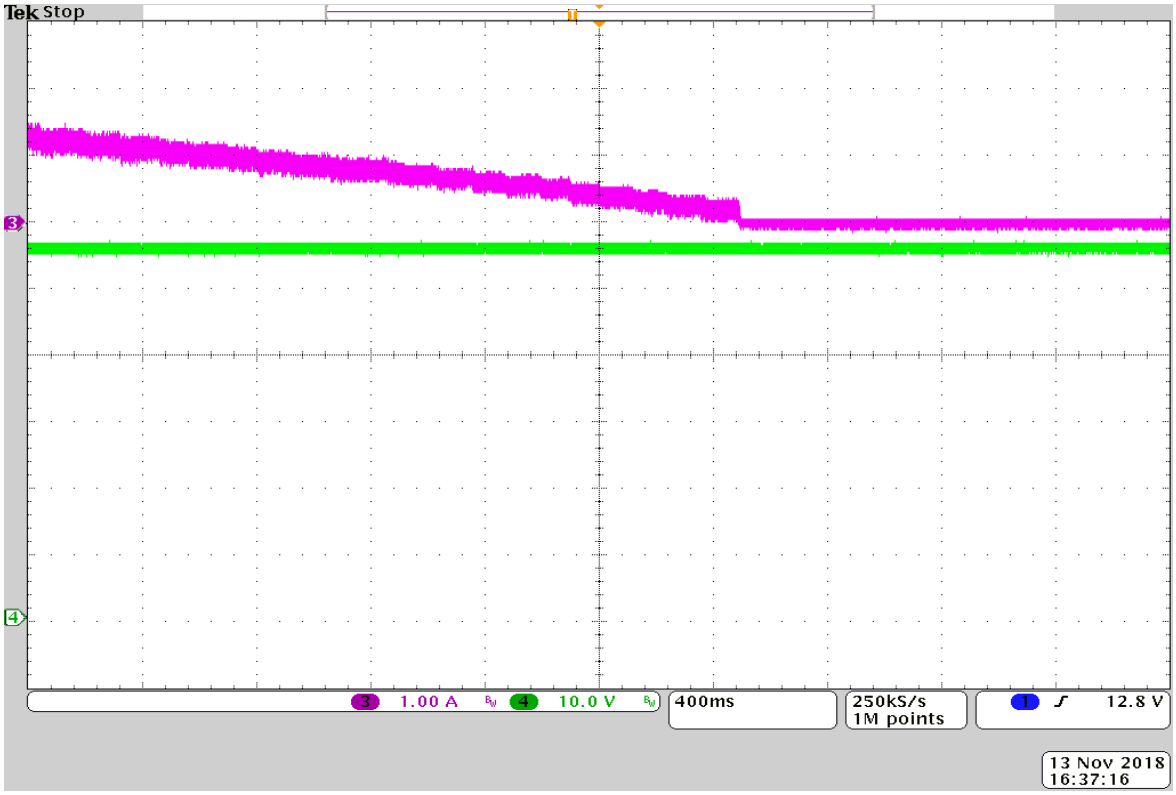


**Figure 17. Transition from CV to Topping mode. Ch3: battery current, Ch4: battery voltage**

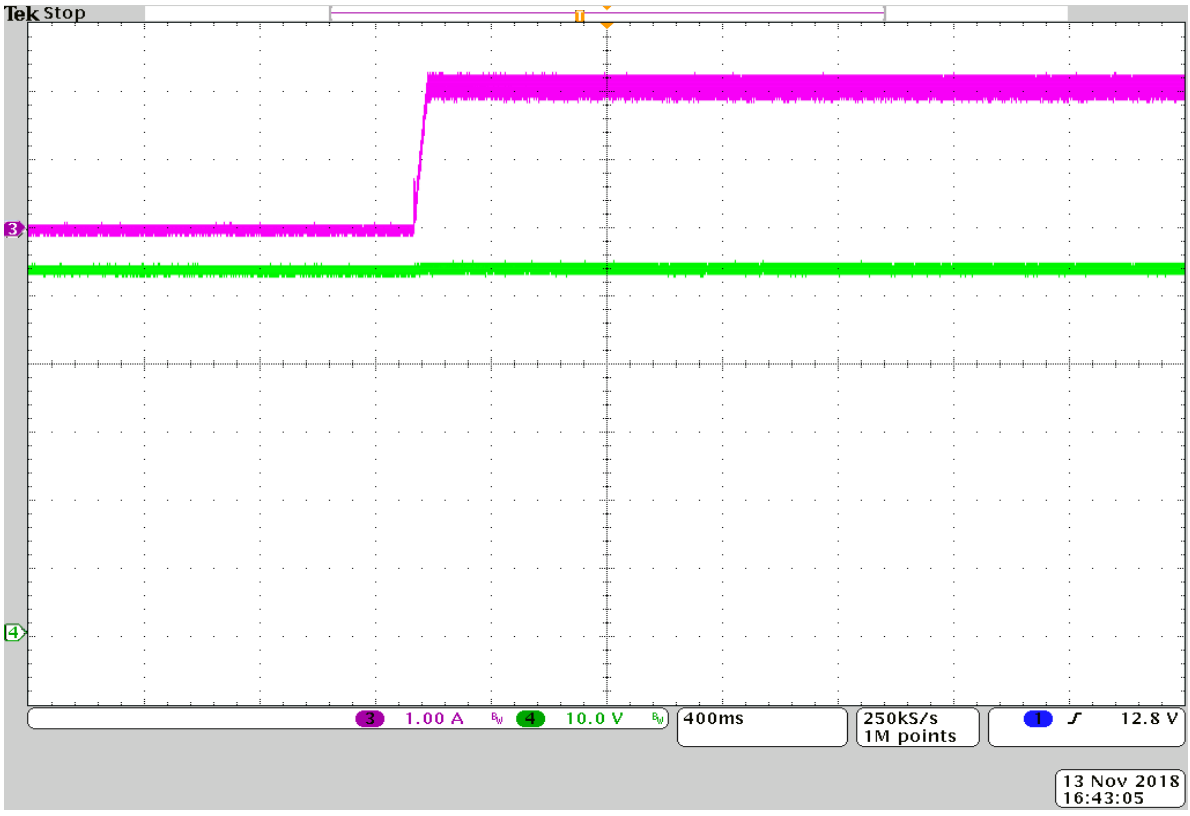


**Figure 18. Transition from Topping to CC mode. Ch3: battery current, Ch4: battery voltage**


Copyright © 2018, Texas Instruments Incorporated

**Turn off procedure:**

3. Turn off DC bus supply
4. Turn off battery supply
5. Turn off DC bus load
6. Turn off battery load

## *7.6 Testing Battery backup operation*

**Turn on procedure:**

1. Repeat section 7.3 step 1 to step 6.
2. The battery should be charging now.
3. Now, turn off the DC bus supply. Observe the DC bus terminal voltage on the scope to look at the smooth transition. The DC bus is regulated at 0.5V lower than its original voltage.
4. Measure the current across the battery terminal, it should be negative. Which means the power is delivered from battery to DC bus. Figure 19 is the typical waveform.

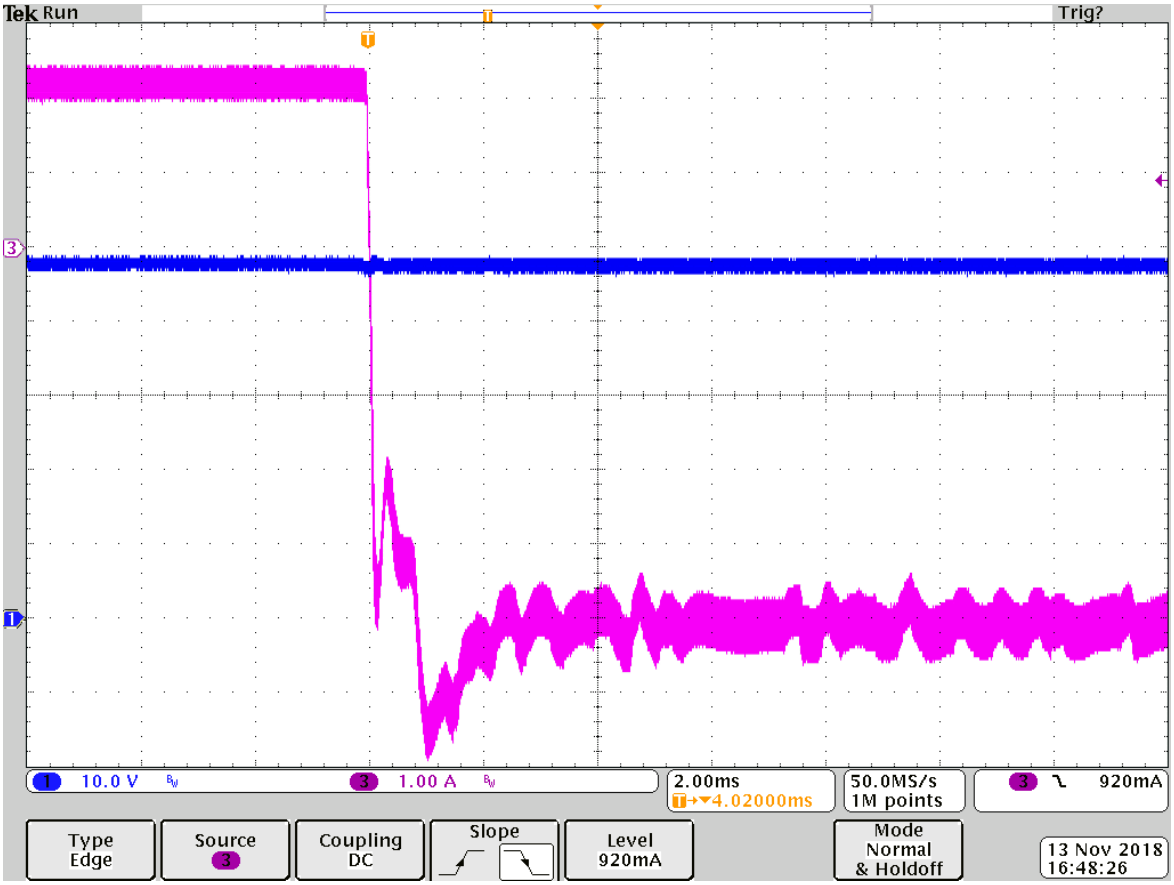


**Figure 19. Battery backup operation. Ch1: DC bus voltage, Ch3: battery current**

**Turn off procedure:**

5. Turn off DC bus supply


Copyright © 2018, Texas Instruments Incorporated

6. Turn off battery supply
7. Turn off DC bus load
8. Turn off battery load

### *7.7 Testing power back operation*

**Turn on procedure:**

1. Repeat section 7.6 step 1 to step 4
2. The battery should do back up operation now.
3. Now turn on the DC bus supply. Observe the DC bus terminal voltage and the battery current on the scope. The current across the battery terminal becomes positive, the backup operation stops and the converter starts charging the battery. Figure 20 is the typical waveform.

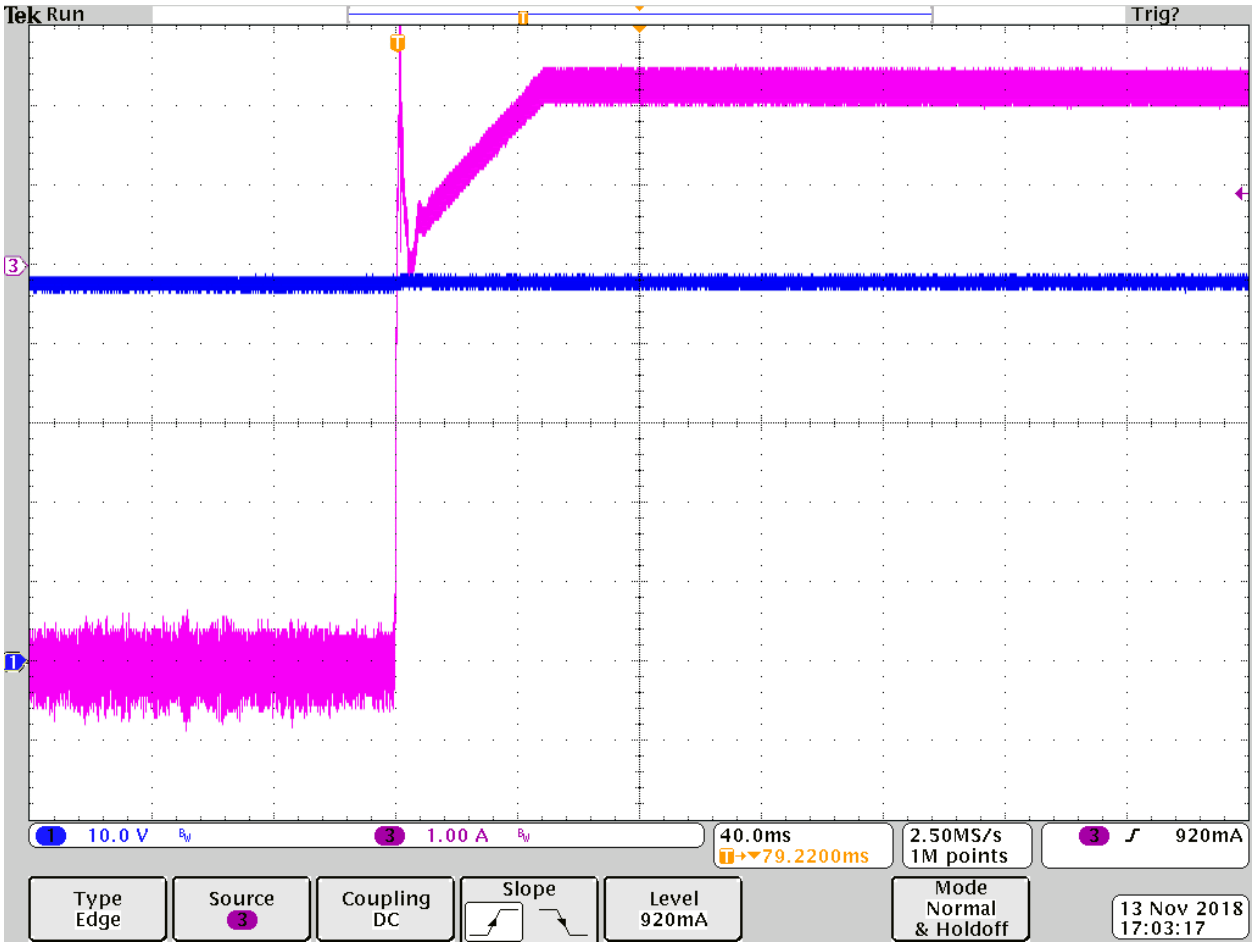


**Figure 20. Power back test. Ch1: DC bus voltage, Ch3: battery current**

**Turn off procedure:**

4. Turn off DC bus supply
5. Turn off battery supply


Copyright © 2018, Texas Instruments Incorporated

6. Turn off DC bus load
7. Turn off battery load

## 8 Efficiency Curves

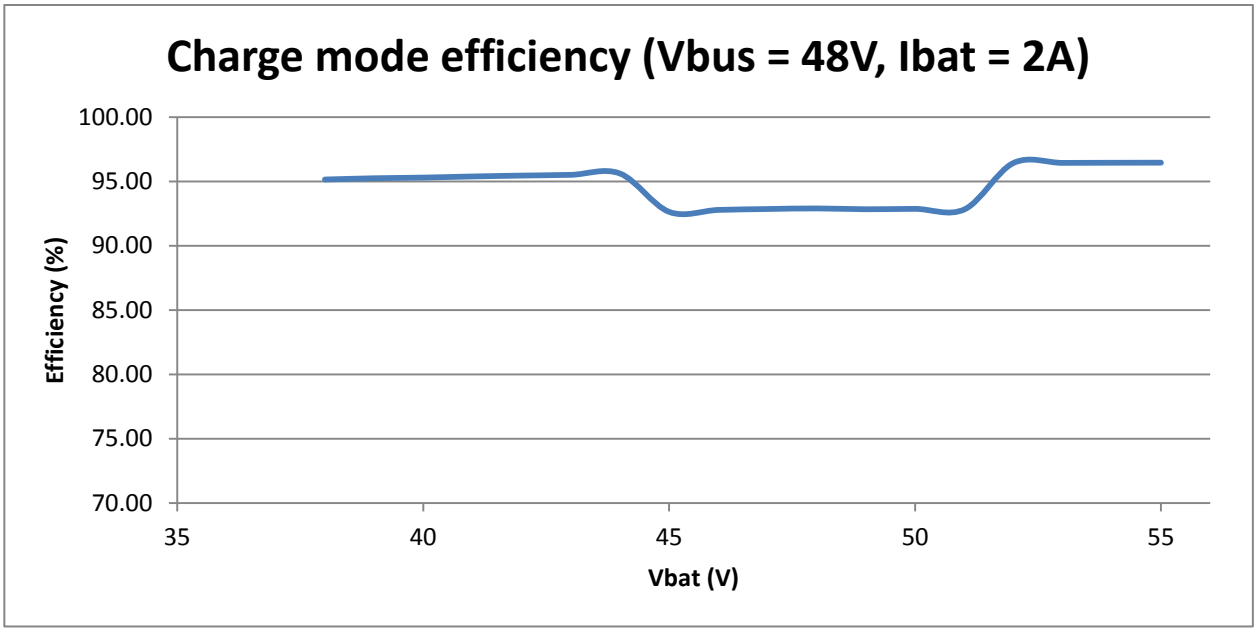


**Figure 21. Charge mode efficiency vs. battery voltage**

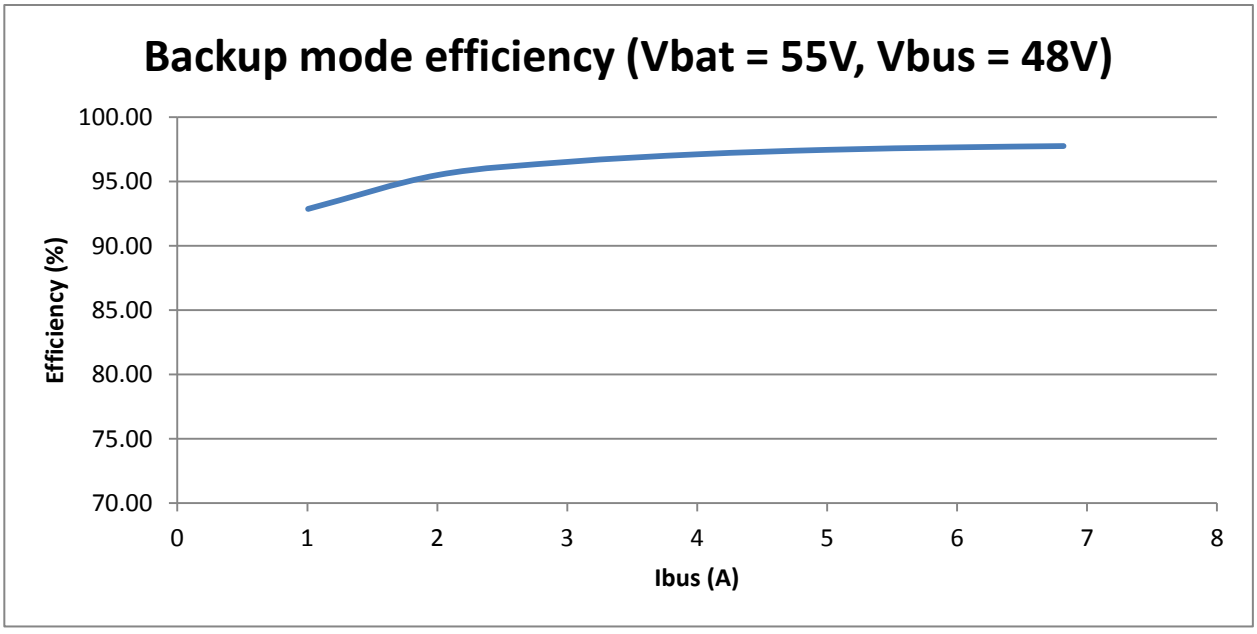


**Figure 22. Backup mode efficiency vs. bus current**


Copyright © 2018, Texas Instruments Incorporated

# IMPORTANT NOTICE AND DISCLAIMER

TI PROVIDES TECHNICAL AND RELIABILITY DATA (INCLUDING DATASHEETS), DESIGN RESOURCES (INCLUDING REFERENCE DESIGNS), APPLICATION OR OTHER DESIGN ADVICE, WEB TOOLS, SAFETY INFORMATION, AND OTHER RESOURCES “AS IS” AND WITH ALL FAULTS, AND DISCLAIMS ALL WARRANTIES, EXPRESS AND IMPLIED, INCLUDING WITHOUT LIMITATION ANY IMPLIED WARRANTIES OF MERCHANTABILITY, FITNESS FOR A PARTICULAR PURPOSE OR NON-INFRINGEMENT OF THIRD PARTY INTELLECTUAL PROPERTY RIGHTS.

These resources are intended for skilled developers designing with TI products. You are solely responsible for (1) selecting the appropriate TI products for your application, (2) designing, validating and testing your application, and (3) ensuring your application meets applicable standards, and any other safety, security, or other requirements. These resources are subject to change without notice. TI grants you permission to use these resources only for development of an application that uses the TI products described in the resource. Other reproduction and display of these resources is prohibited. No license is granted to any other TI intellectual property right or to any third party intellectual property right. TI disclaims responsibility for, and you will fully indemnify TI and its representatives against, any claims, damages, costs, losses, and liabilities arising out of your use of these resources.

TI’s products are provided subject to TI’s Terms of Sale (https:www.ti.com/legal/termsofsale.html) or other applicable terms available either on ti.com or provided in conjunction with such TI products. TI’s provision of these resources does not expand or otherwise alter TI’s applicable warranties or warranty disclaimers for TI products.

Mailing Address: Texas Instruments, Post Office Box 655303, Dallas, Texas 75265
Copyright © 2021, Texas Instruments Incorporated