1) USB Differential Pairs - 90 Ohm
(A) USB_D_P and USB_D_N
2) ADC Differential pair Impedance Matching - 50 Ohm
(A) ADCINA4A5_P and ADCINA4A5_N
(B) ADCINB3B4_P and ADCINB3B4_N
(C) MCU_A4A5_P and MCU_A4A5_N
(D) MCU_B3B4_P and MCU_B3B4_N
3) CLK Paths - 50 Ohm
(A) X1
(B) X2

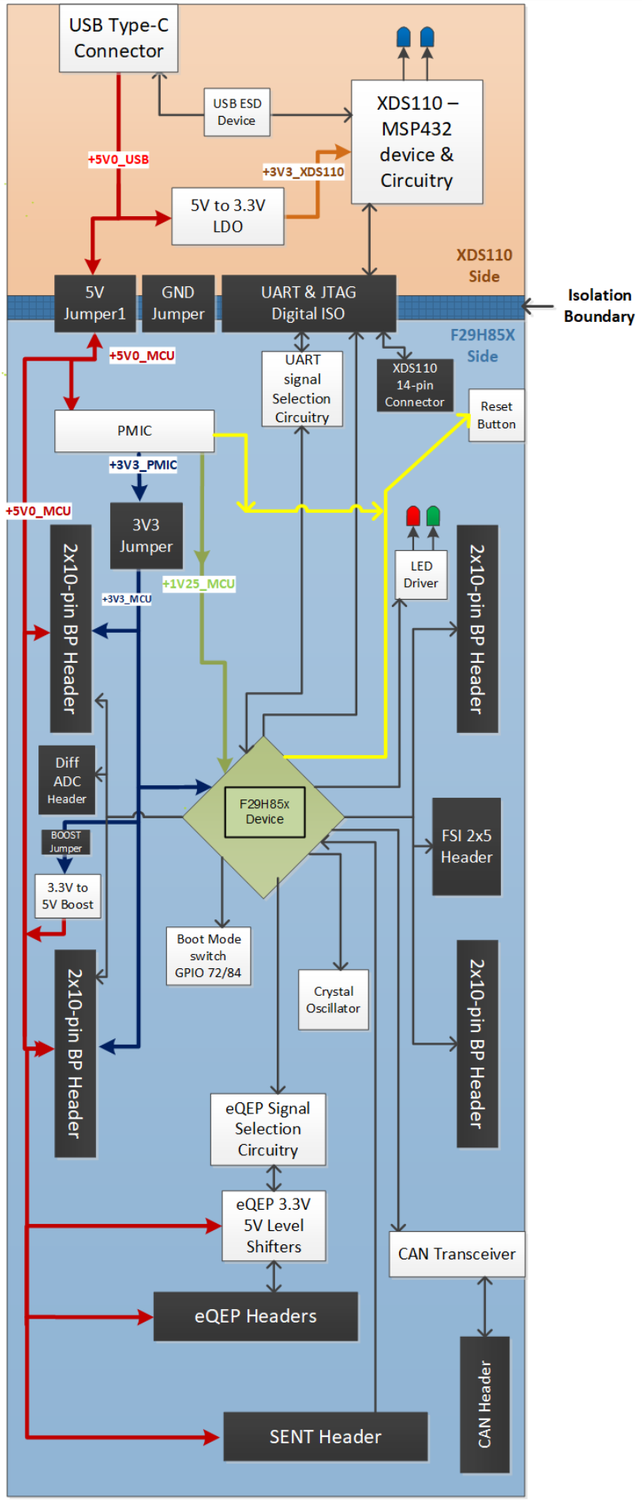


## Revision History

| Rev | ECN # | Approved Date | Approved by | Notes |
|---|---|---|---|---|
| E1 | N/A | N/A | SB | Original engineering release. |
| A | N/A | June 20, 2025 | SB | - Added C15 to U3A VOUT<br>- Changed C28 from 0.1uF to 200pF<br>- Changed GPIO30 connection on U10<br>- Changed ERRORSTS connection on U10<br>- Added OPN on U10<br>- Added R18, R26, and R27<br>- Added R25 and R28<br>- Corrected S5 and S6 silkscreen labels in PCB |
| A | N/A | Oct. 20, 2025 | GM | Updated notes in SOM power schematic; no functional change to EVM design. |
| B | N/A | May 4, 2026 | GM | Moved XTAL dampening resistor to X2. Updated PCB silkscreen to mention P58x and P32x support. Updated L1 part number. |

Texas Instruments and/or its licensors do not warrant the accuracy or completeness of this specification or any information contained therein. Texas Instruments and/or its licensors do not warrant that this design will meet the specifications, will be suitable for your application or fit for any particular purpose, or will operate in an implementation. Texas Instruments and/or its licensors do not warrant that the design is production worthy. You should completely validate and test your design implementation to confirm the system functionality for your application.

| | | | |
|---|---|---|---|
| Orderable: LAUNCHXL-F29H85X | | Designed for: Public Release | Mod. Date: 11/9/2026 |
| TID #: N/A | | Project Title: LAUNCHXL-F29H85X | |
| Number: MCU119 | Rev: B | Sheet Title: | |
| SVN Rev: Version control disabled | | Assembly Variant: 002 | Sheet: 1 of 8 |
| Drawn By: Susmitha Bumadi | | File: MCU119B_Block_Diagram.SchDoc | Size: B |
| Engineer: Susmitha Bumadi | | Contact: http://www.ti.com/support | |

Texas Instruments
http://www.ti.com

© Texas Instruments 2024

## BoosterPack Headers Site 1 (Top)

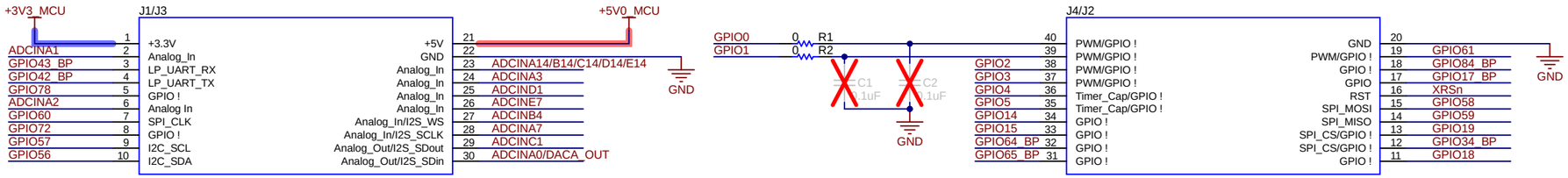


## BoosterPack Headers Site 2 (Bottom)

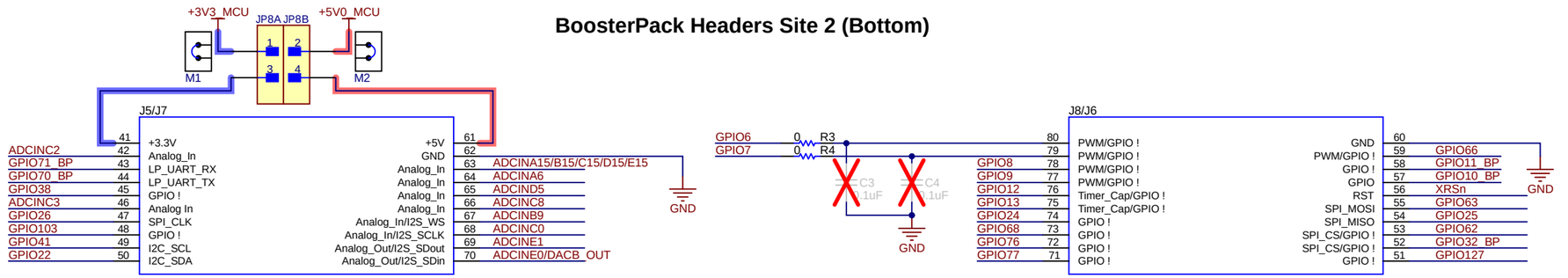


## SENT Connector

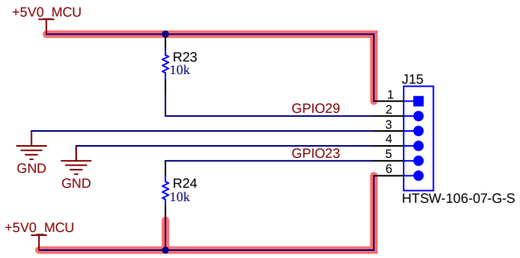


## CAN Transceiver & Connector

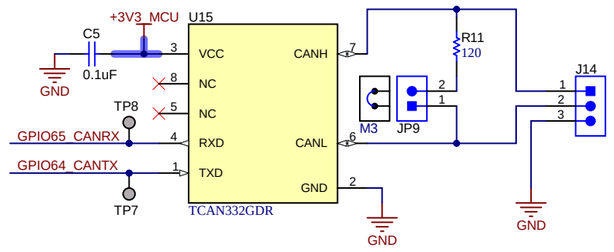


## Differential ADC Connector

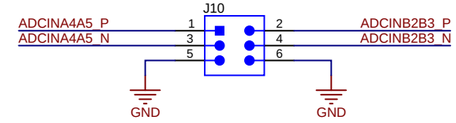


## EQEP Connectors

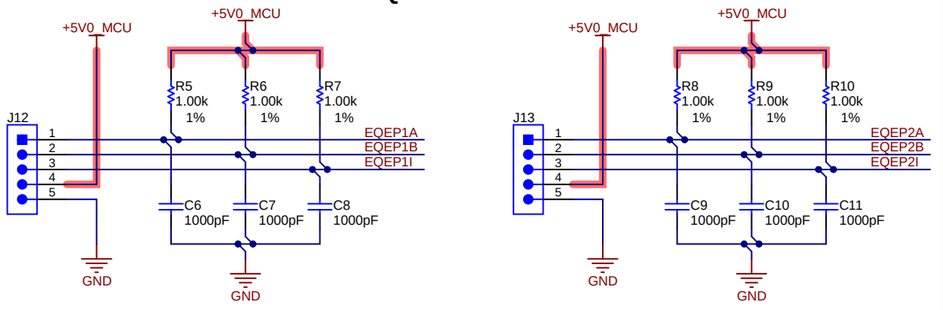


## FSI Connector

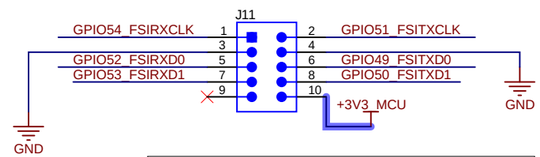


FSIRXCLK, FSIRXD0, and FSIRXD1 length matched to each other with 25mil tolerance.
FSITXCLK, FSITXD0, and FSITXD1 length matched to each other with 25mil tolerance.

Texas Instruments and/or its licensors do not warrant the accuracy or completeness of this specification or any information contained therein. Texas Instruments and/or its licensors do not warrant that this design will meet the specifications, will be suitable for your application or fit for any particular purpose, or will operate in an implementation. Texas Instruments and/or its licensors do not warrant that the design is production worthy. You should completely validate and test your design implementation to confirm the system functionality for your application.

| | | | |
|---|---|---|---|
| Orderable: LAUNCHXL-F29H85X | | Designed for: Public Release | Mod. Date: 6/20/2025 |
| TID #: N/A | | Project Title: LAUNCHXL-F29H85X | |
| Number: MCU119 | Rev: B | Sheet Title: | |
| SVN Rev: Version control disabled | | Assembly Variant: 002 | Sheet: 2 of 8 |
| Drawn By: Susmitha Bumadi | | File: MCU119B_Connectors.SchDoc | Size: B |
| Engineer: Susmitha Bumadi | | Contact: http://www.ti.com/support | |

Texas Instruments
http://www.ti.com

© Texas Instruments 2024

## F29H85x Device

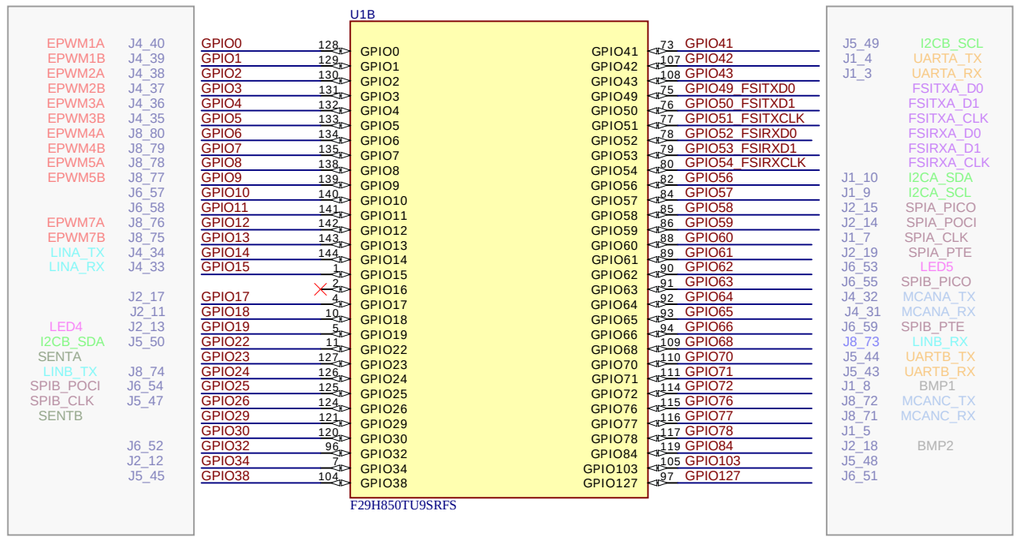


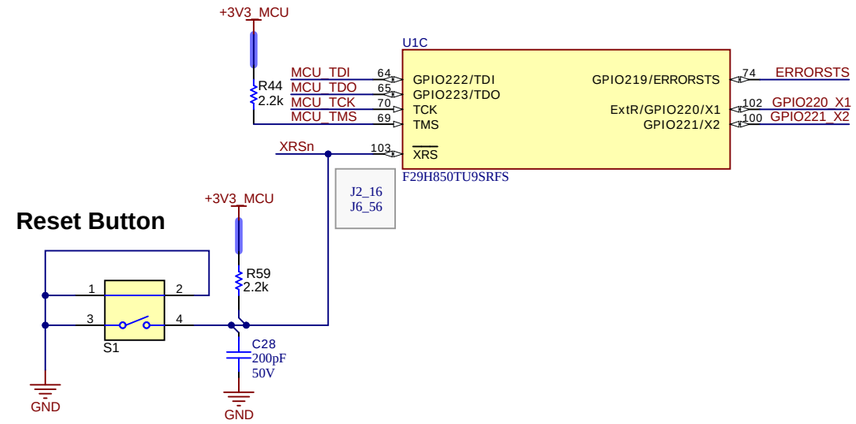


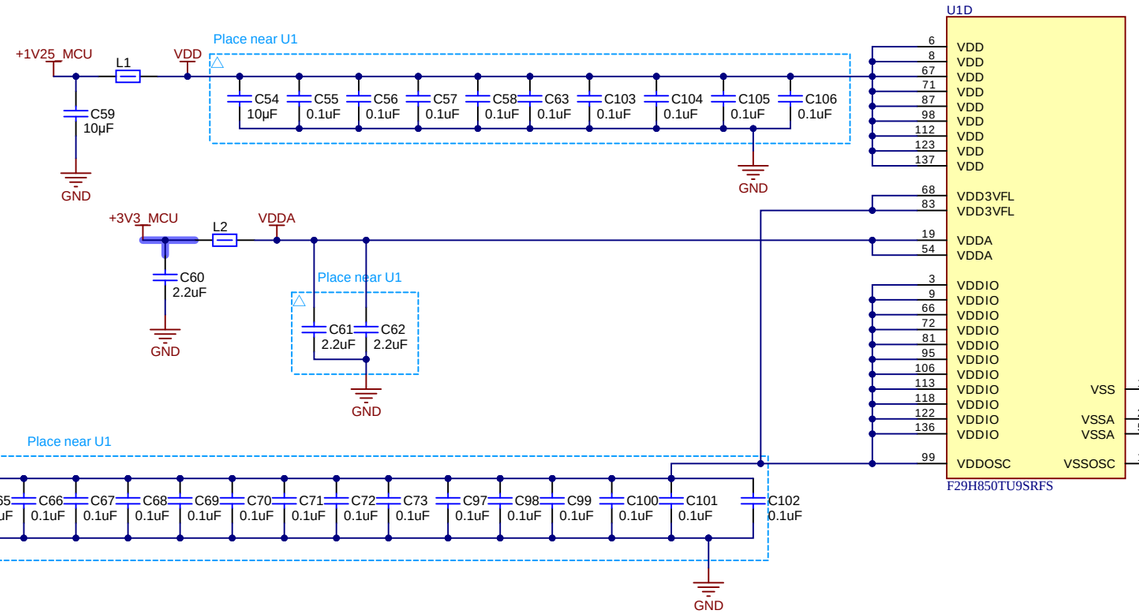


Texas Instruments and/or its licensors do not warrant the accuracy or completeness of this specification or any information contained therein. Texas Instruments and/or its licensors do not warrant that this design will meet the specifications, will be suitable for your application or fit for any particular purpose, or will operate in an implementation. Texas Instruments and/or its licensors do not warrant that the design is production worthy. You should completely validate and test your design implementation to confirm the system functionality for your application.

| | | | |
|---|---|---|---|
| Orderable: LAUNCHXL-F29H85X | | Designed for: Public Release | Mod. Date: 10/12/2026 |
| TID #: N/A | | Project Title: LAUNCHXL-F29H85X | |
| Number: MCU119 | Rev: B | Sheet Title: | |
| SVN Rev: Version control disabled | | Assembly Variant: 002 | Sheet: 3 of 8 |
| Drawn By: Susmitha Bumadi | | File: MCU119B_F29H85X_Device.SchDoc | Size: B |
| Engineer: Susmitha Bumadi | | Contact: http://www.ti.com/support | |

TEXAS INSTRUMENTS
http://www.ti.com

© Texas Instruments 2024

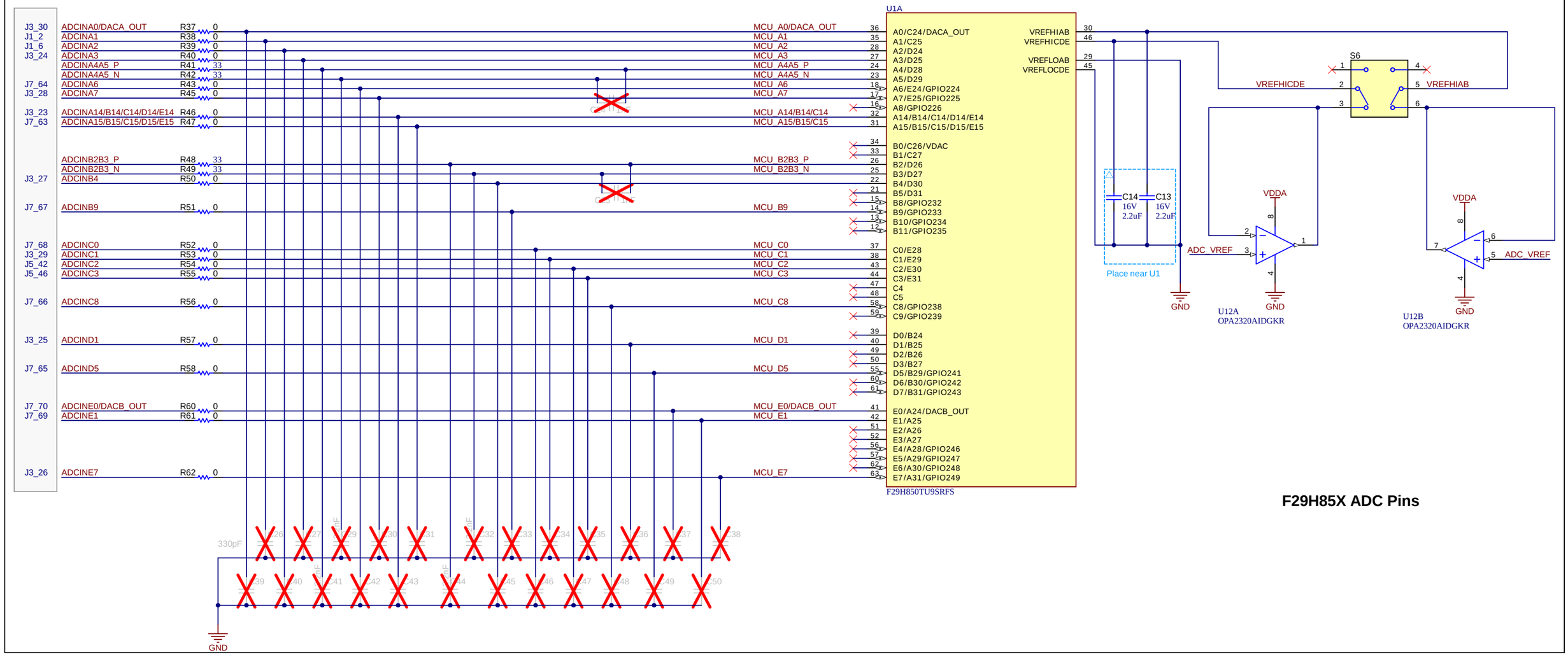


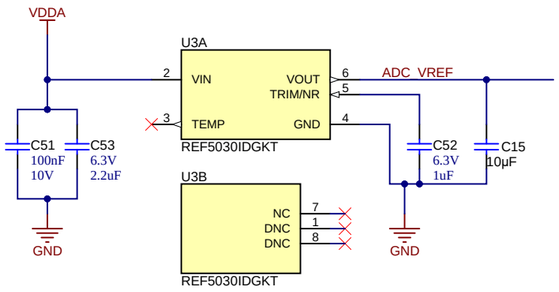


Texas Instruments and/or its licensors do not warrant the accuracy or completeness of this specification or any information contained therein. Texas Instruments and/or its licensors do not warrant that this design will meet the specifications, will be suitable for your application or fit for any particular purpose, or will operate in an implementation. Texas Instruments and/or its licensors do not warrant that the design is production worthy. You should completely validate and test your design implementation to confirm the system functionality for your application.

| | | |
|---|---|---|
| Orderable: LAUNCHXL-F29H85X | Designed for: Public Release | Mod. Date: 6/26/2025 |
| TID #: N/A | Project Title: LAUNCHXL-F29H85X | |
| Number: MCU119 Rev: B | Sheet Title: | |
| SVN Rev: Version control disabled | Assembly Variant: 002 | Sheet: 4 of 8 |
| Drawn By: Susmitha Bumadi | File: MCU119B_ADC.SchDoc | Size: B |
| Engineer: Susmitha Bumadi | Contact: http://www.ti.com/support | |

TEXAS INSTRUMENTS
http://www.ti.com

© Texas Instruments 2024

## Emulation Side

### USB-C Connector

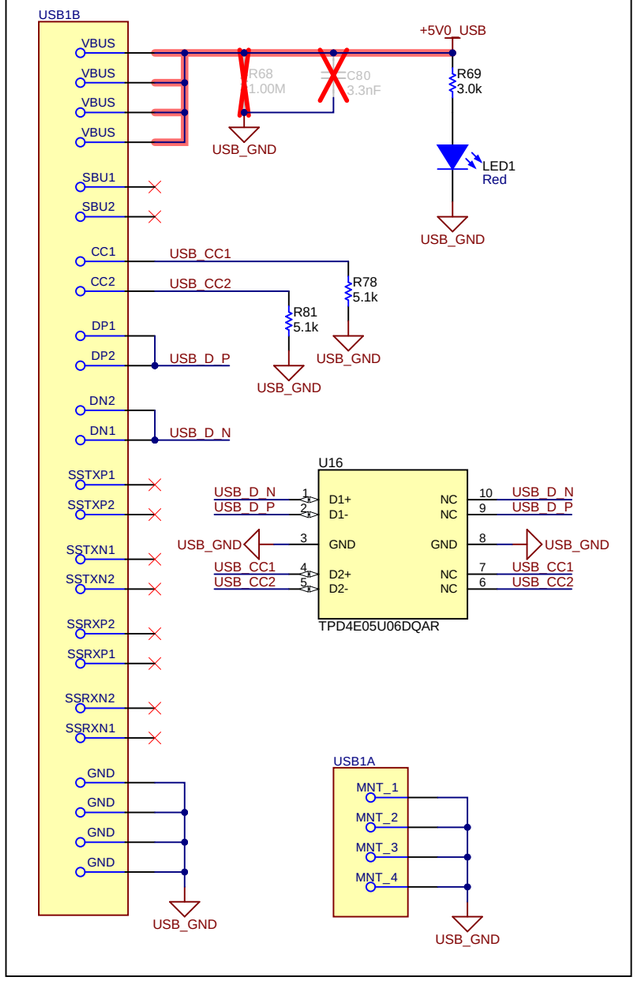


### 5V to 3.3V (XDS)

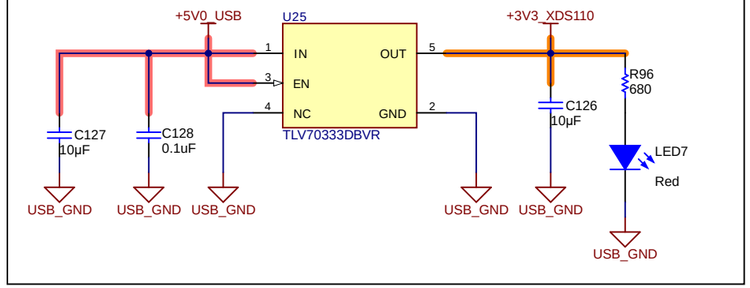


### PWR & GND Isolation Boundary

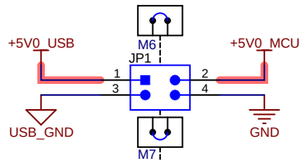


### 3.3V to 5V BOOST

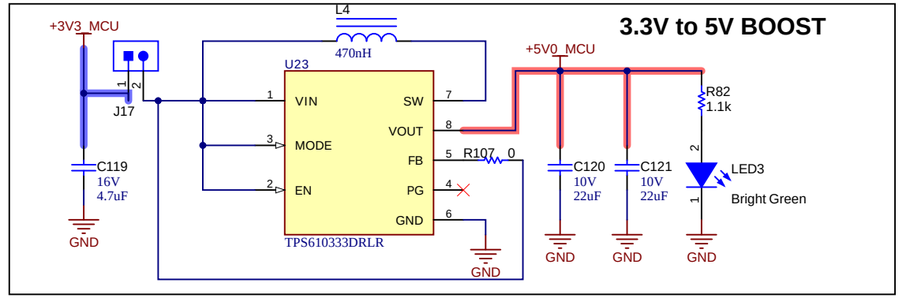


## C2000 Side

### PMIC

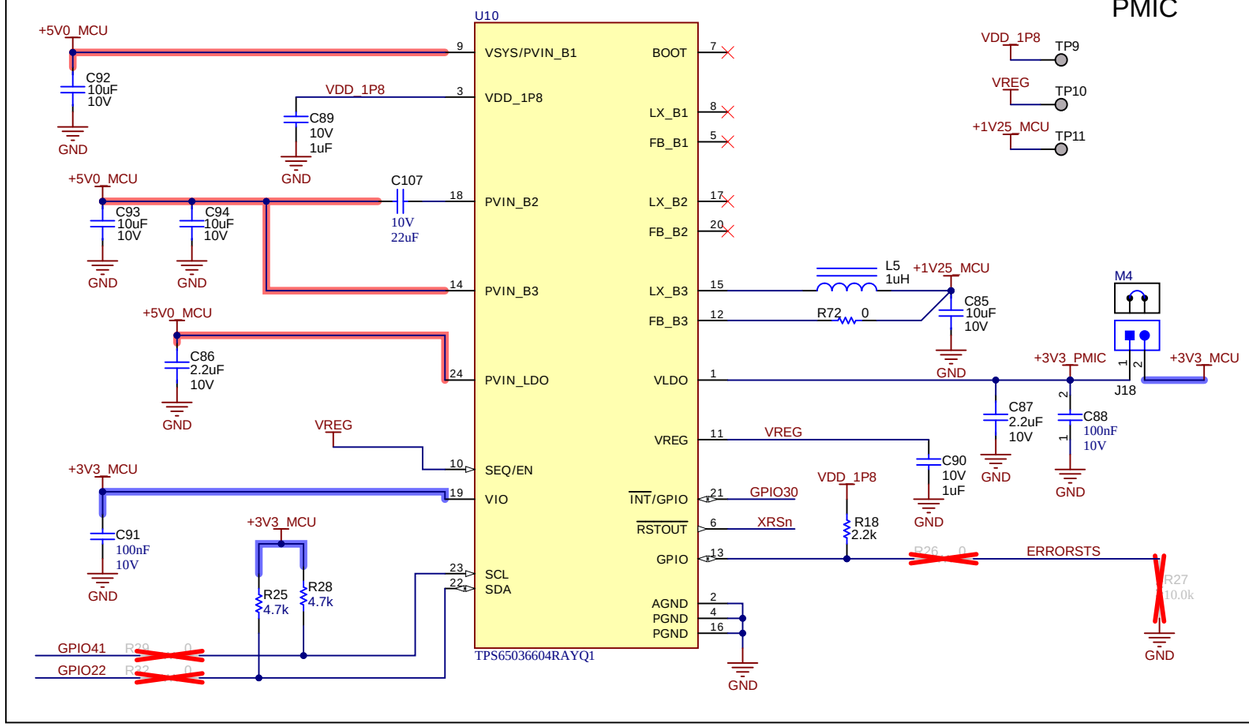


### Power Headers and Test Points

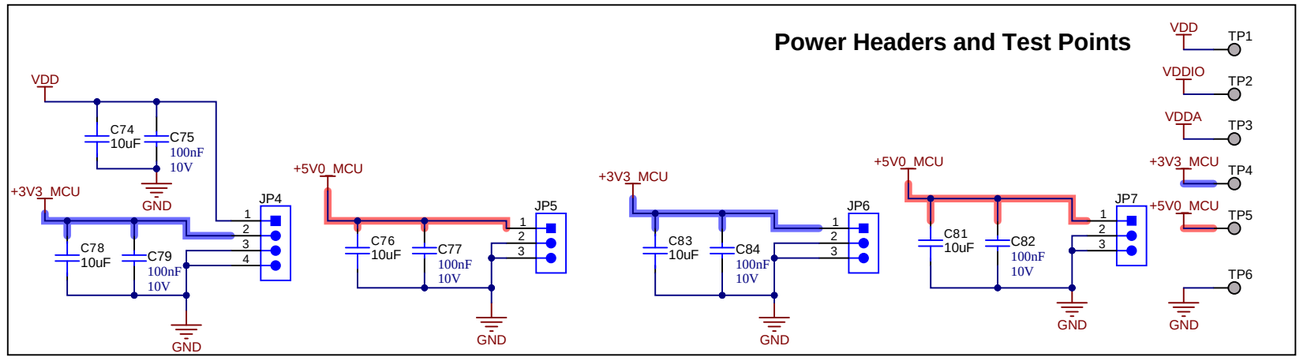


Texas Instruments and/or its licensors do not warrant the accuracy or completeness of this specification or any information contained therein. Texas Instruments and/or its licensors do not warrant that this design will meet the specifications, will be suitable for your application or fit for any particular purpose, or will operate in an implementation. Texas Instruments and/or its licensors do not warrant that the design is production worthy. You should completely validate and test your design implementation to confirm the system functionality for your application.

| | | | |
|---|---|---|---|
| Orderable: LAUNCHXL-F29H85X | | Designed for: Public Release | Mod. Date: 10/20/2025 |
| TID #: N/A | | Project Title: LAUNCHXL-F29H85X | |
| Number: MCU119 | Rev: B | Sheet Title: | |
| SVN Rev: Version control disabled | | Assembly Variant: 002 | Sheet: 5 of 8 |
| Drawn By: Susmitha Bumadi | | File: MCU119B_USB_and_Power.SchDoc | Size: B |
| Engineer: Susmitha Bumadi | | Contact: http://www.ti.com/support | |

Texas Instruments
http://www.ti.com

© Texas Instruments 2024

## XDS110 Device

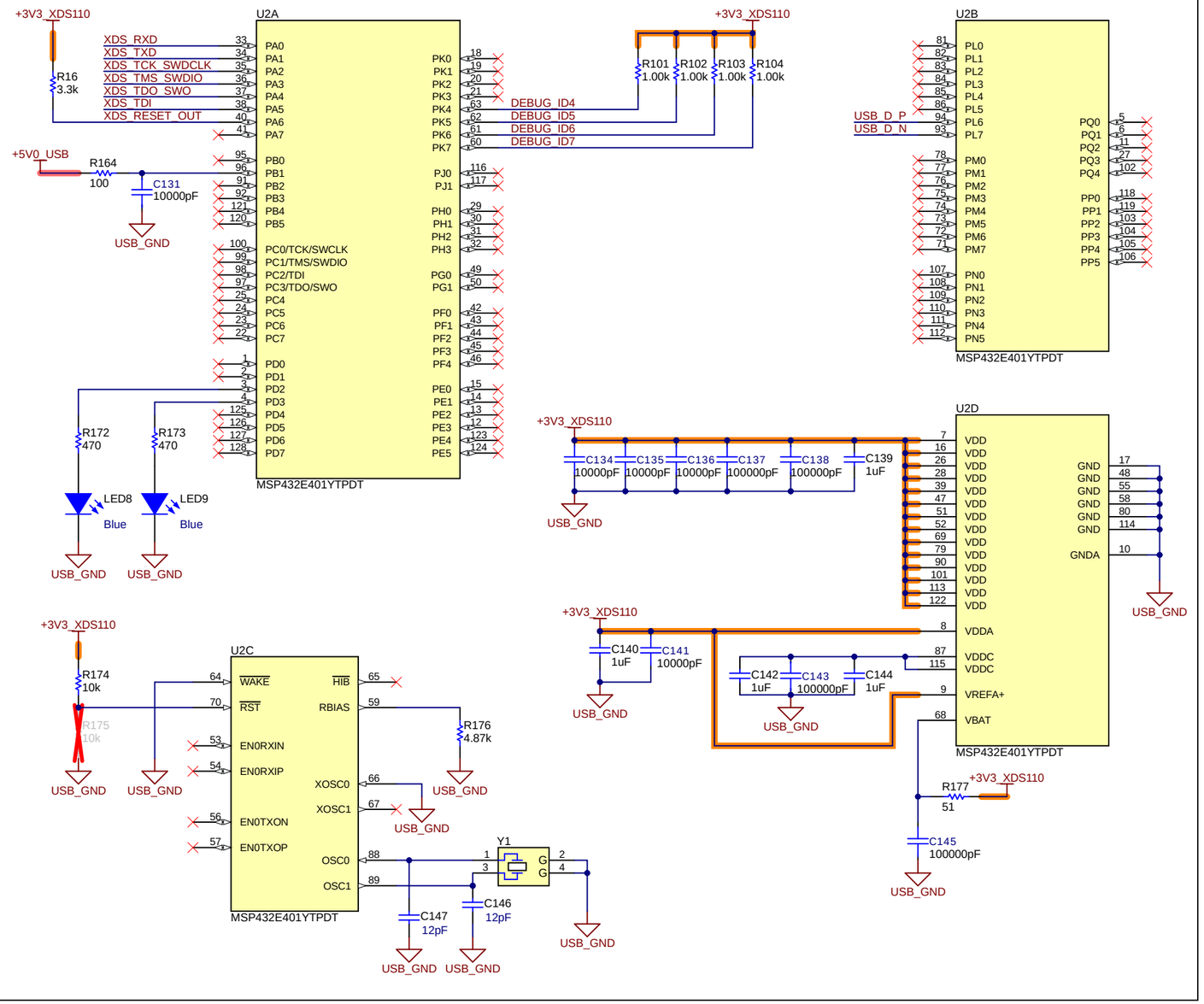


## JTAG & UART Digital Isolation

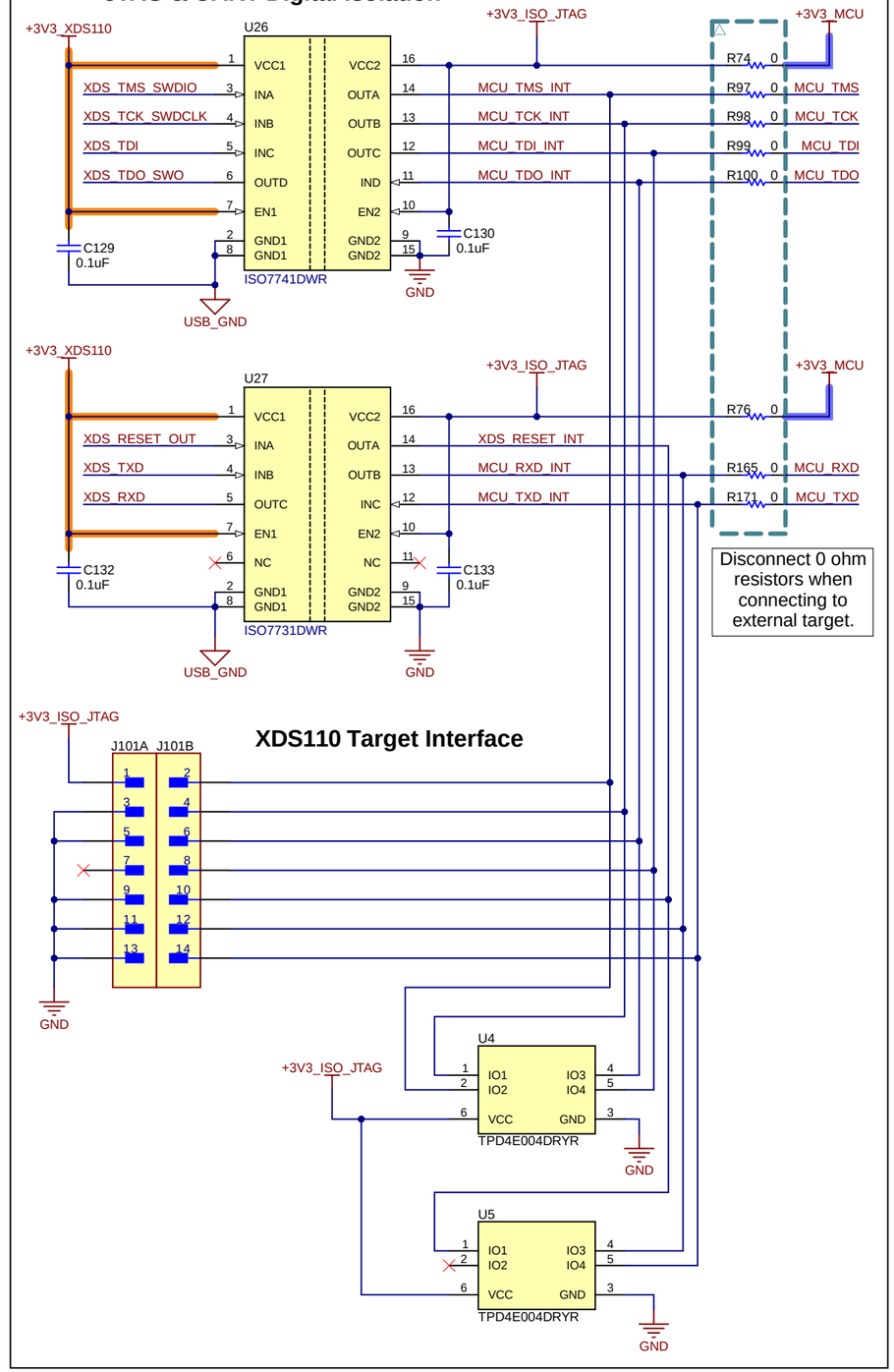


## XDS110 Target Interface




Texas Instruments and/or its licensors do not warrant the accuracy or completeness of this specification or any information contained therein. Texas Instruments and/or its licensors do not warrant that this design will meet the specifications, will be suitable for your application or fit for any particular purpose, or will operate in an implementation. Texas Instruments and/or its licensors do not warrant that the design is production worthy. You should completely validate and test your design implementation to confirm the system functionality for your application.

| | | | |
|---|---|---|---|
| Orderable: LAUNCHXL-F29H85X | | Designed for: Public Release | Mod. Date: 2/27/2025 |
| TID #: N/A | | Project Title: LAUNCHXL-F29H85X | |
| Number: MCU119 | Rev: B | Sheet Title: | |
| SVN Rev: Version control disabled | | Assembly Variant: 002 | Sheet: 6 of 8 |
| Drawn By: Susmitha Bumadi | | File: MCU119B_XDS110_MCU.SchDoc | Size: B |
| Engineer: Susmitha Bumadi | | Contact: http://www.ti.com/support | |

Texas Instruments
http://www.ti.com

© Texas Instruments 2024

## UART Routing

| UART_SEL1 | UART_SEL2 | GPIO42/43 Route | GPIO70/71 Route | |
|---|---|---|---|---|
| 0 | 0 | XDS110 COM Port | BP | - DEFAULT |
| 0 | 1 | XDS110 COM Port | NC | |
| 1 | 0 | BP | BP | |
| 1 | 1 | BP | XDS110 COM Port | |

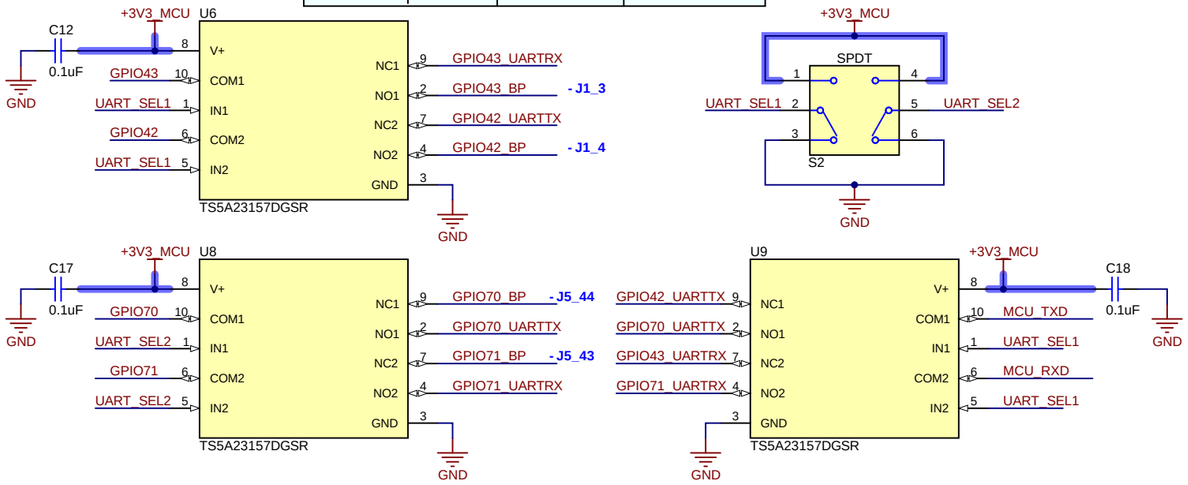


## Oscillator

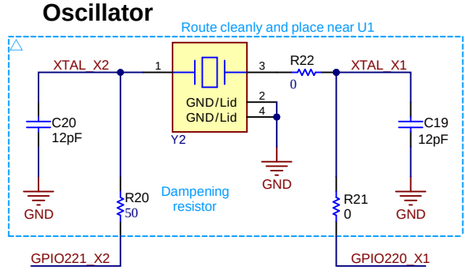


By default:
- Crystal Y2 is connected between GPIO221_X2 and GPIO220_X1.

## Boot Mode Select

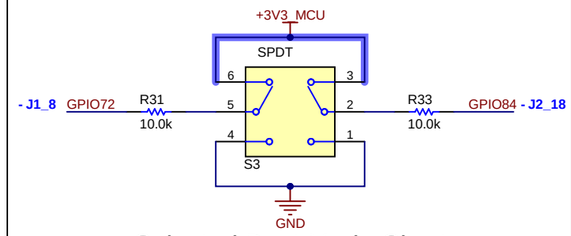


### Selected Boot Mode Chart

| Mode # | GPIO72 | GPIO84 | Boot Mode |
|---|---|---|---|
| 00 | 0 | 0 | Boot from Parallel GPIO |
| 01 | 0 | 1 | Boot from SCI / Wait Mode |
| 02 | 1 | 0 | Boot from CAN |
| 03 | 1 | 1 | Boot from Flash |

## CAN Routing

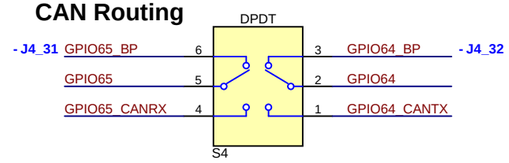


## EQEP Routing

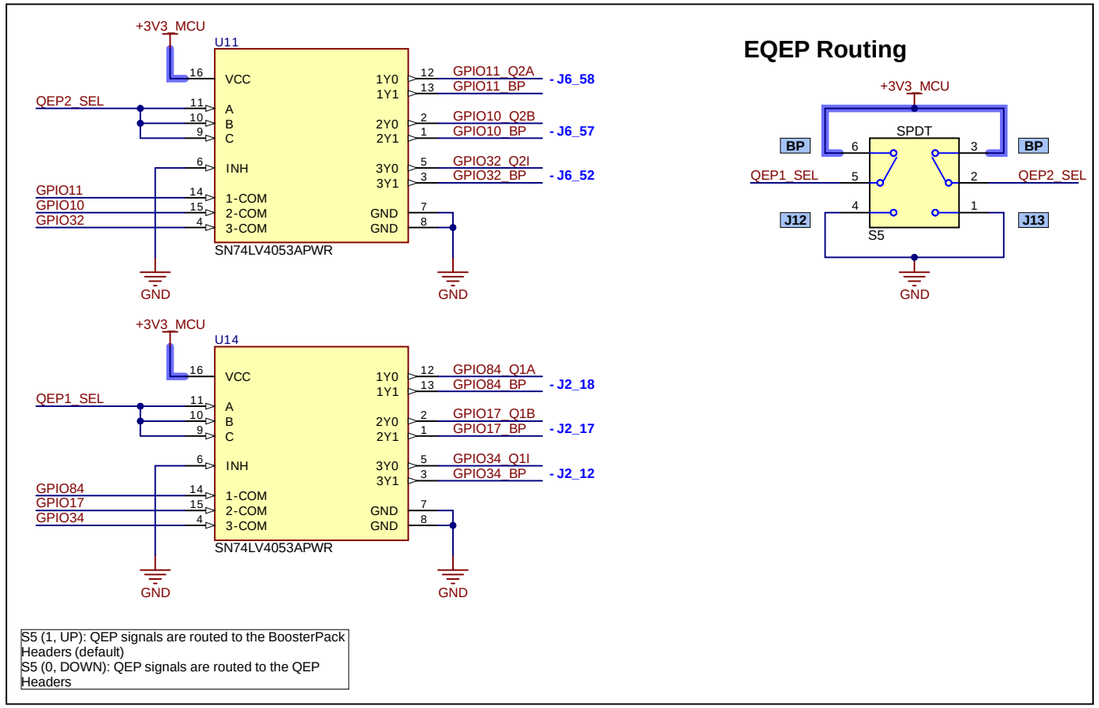





S5 (1, UP): QEP signals are routed to the BoosterPack Headers (default)
S5 (0, DOWN): QEP signals are routed to the QEP Headers

## EQEP Level Shifter

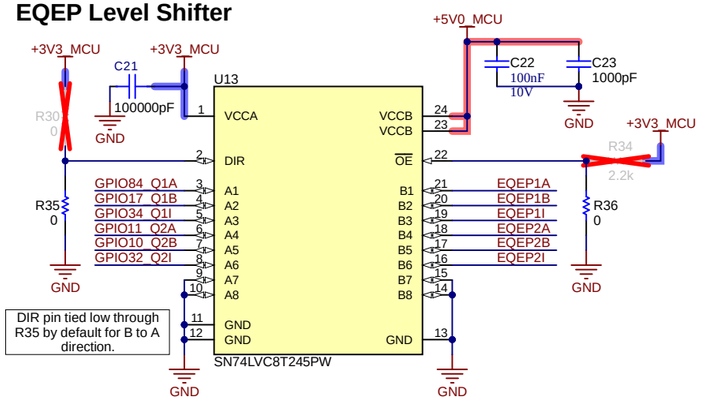


DIR pin tied low through R35 by default for B to A direction.

To disable the Level Shifter:
1. De-populate R36
2. Place a 2.2k ohm resistor on R34 to pull-up OE

## User LEDs

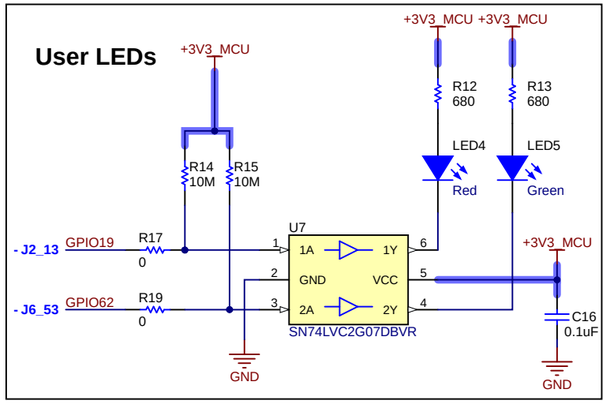


Texas Instruments and/or its licensors do not warrant the accuracy or completeness of this specification or any information contained therein. Texas Instruments and/or its licensors do not warrant that this design will meet the specifications, will be suitable for your application or fit for any particular purpose, or will operate in an implementation. Texas Instruments and/or its licensors do not warrant that the design is production worthy. You should completely validate and test your design implementation to confirm the system functionality for your application.

| | | | |
|---|---|---|---|
| Orderable: LAUNCHXL-F29H85X | | Designed for: Public Release | Mod. Date: 5/4/2026 |
| TID #: N/A | | Project Title: LAUNCHXL-F29H85X | |
| Number: MCU119 | Rev: B | Sheet Title: | |
| SVN Rev: Version control disabled | | Assembly Variant: 002 | Sheet: 7 of 8 |
| Drawn By: Susmitha Bumadi | | File: MCU119B_AltRouting_Misc.SchDoc | Size: B |
| Engineer: Susmitha Bumadi | | Contact: http://www.ti.com/support | |

TEXAS INSTRUMENTS
http://www.ti.com

© Texas Instruments 2024

FID1 FID2 FID3

FID4 FID5 FID6

MH1 MH2

MH3 MH4

PCB Number: MCU119
PCB Rev: B

Logo1
PCB
LOGO
Texas Instruments

CE Logo1

Logo3
PCB
LOGO
FCC disclaimer

Logo4
PCB
LOGO
WEEE logo

Logo5
PCB
LOGO
Texas Instruments

Logo6
PCB
LOGO
ETHERCAT LABEL

ZZ1
Assembly Note
These assemblies are ESD sensitive, ESD precautions shall be observed.

ZZ2
Assembly Note
These assemblies must be clean and free from flux and all contaminants. Use of no clean flux is not acceptable.

ZZ3
Assembly Note
These assemblies must comply with workmanship standards IPC-A-610 Class 2, unless otherwise specified.

Texas Instruments and/or its licensors do not warrant the accuracy or completeness of this specification or any information contained therein. Texas Instruments and/or its licensors do not warrant that this design will meet the specifications, will be suitable for your application or fit for any particular purpose, or will operate in an implementation. Texas Instruments and/or its licensors do not warrant that the design is production worthy. You should completely validate and test your design implementation to confirm the system functionality for your application.

| | | | |
|---|---|---|---|
| Orderable: LAUNCHXL-F29H85X | | Designed for: Public Release | Mod. Date: 11/9/2026 |
| TID #: N/A | | Project Title: LAUNCHXL-F29H85X | |
| Number: MCU119 | Rev: B | Sheet Title: | |
| SVN Rev: Version control disabled | | Assembly Variant: 002 | Sheet: 8 of 8 |
| Drawn By: Susmitha Bumadi | | File: MCU119B_Hardware.SchDoc | Size: B |
| Engineer: Susmitha Bumadi | | Contact: http://www.ti.com/support | |

Texas Instruments
http://www.ti.com

© Texas Instruments 2024