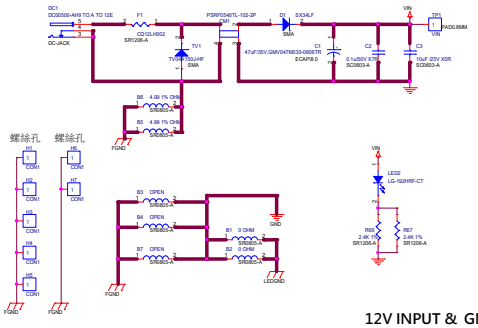

12V INPUT & GND

L1、U1會發熱，所以拉線盡量粗，L1兩端走線用區塊銅泊，U1下方要拉GND線，以利散熱

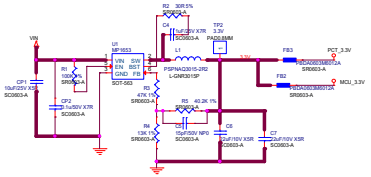

3.3V Output

J1位置稍靠近板邊,以方便燒錄治具接觸

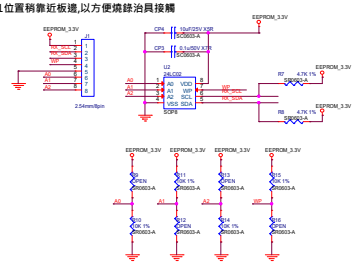

EEPROM I2C Address A0,A1,A2 set to 0X52

EEPROM

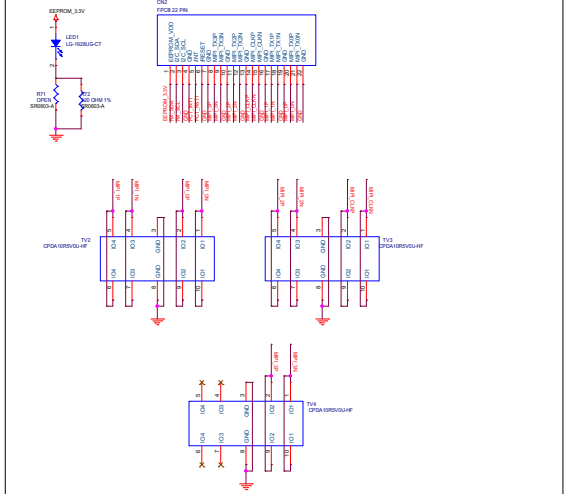

MIPI SIGNAL I/F

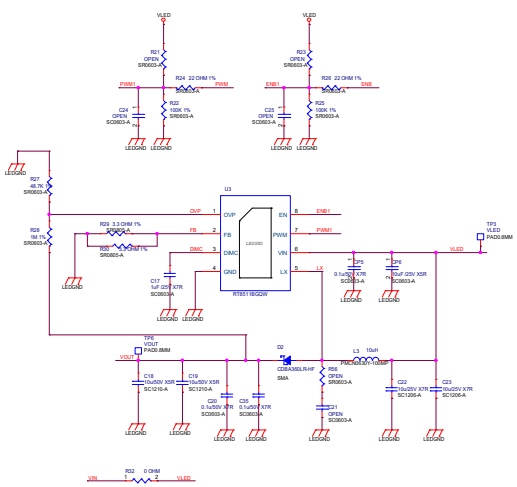

LED DRIVER IC

MCU

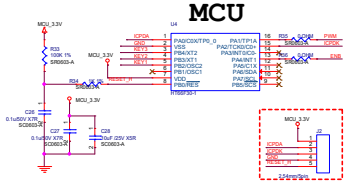

J2位置稍靠近板邊,以方便燒錄治具接觸

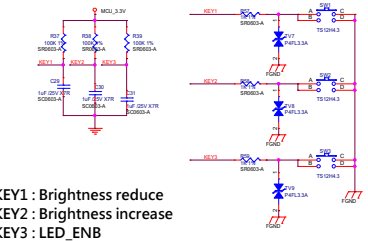

KEY1 : Brightness reduce
KEY2 : Brightness increase
KEY3 : LED_ENB

CONTROL LED PWM & LED ENB

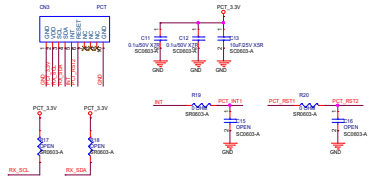

PCT I/F

Title	MF-07028MCAA8AS-C POWER BOARD		
Size	Document Number		Rev
Custom	311-070100005		B002
Date:	Tuesday, October 07, 2008	Sheet	of