TMDSCSKCC

TABLE OF CONTENTS

SL.No.	CONTENTS	PAGE NO
1	TABLE OF CONTENTS	1
2	REVISION HISTORY	2
3	BLOCK DIAGRAM	3
4	I2C TREE DIAGRAM	4
5	POWER FLOW DIAGRAM	5
6	POWER CALCULATION	6
7	BOARD TO BOARD & EXPANSION CONNECTOR	7
8	CAMERA & SWITCHES	8
9	AUDIO CODEC & LEDS	9
10	COMPOSITE VIDEO & HDMI	10
11	ETHERNET PHY	11
12	FT2232 JTAG / DEBUG	12
13	MICROSD CARD & USB	13
14	POWER SUPPLY	14
15	OVERVOLTAGE PROTECTION	15
16	HARDWARE SCHEMATICS	16

REV	B
VERSION	4.0

REVISION HISTORY

VER #	DATE	DESCRIPTION OF CHANGES	DESIGNED BY	REVEIWED BY	APPROVED BY
0.1	21/09/2016	UPDATED PRDN_REV A SCHEMATIC FROM SOURCE REV A SCHEMATIC AS PER CHANGELIST DOCUMENT	MISTRAL DESIGN TEAM	AJIT M B	AJIT M B
1.0	21/09/2016	Reviewd & Baselined	MISTRAL DESIGN TEAM	AJIT M B	AJIT M B
1.1	06/01/2017	SD card Part# removed from hardware schematics page	MISTRAL DESIGN TEAM	AJIT M B	AJIT M B
2.0	06/01/2017	Baselined	MISTRAL DESIGN TEAM	AJIT M B	AJIT M B
2.1	09/01/2017	Power cord Part# added in hardware schematics page	MISTRAL DESIGN TEAM	AJIT M B	AJIT M B
3.0	09/01/2017	Baselined	MISTRAL DESIGN TEAM	AJIT M B	AJIT M B
3.1	18/01/2017	Schematics renamed from PRDN_REVA to REVB	MISTRAL DESIGN TEAM	AJIT M B	AJIT M B
4.0	18/01/2017	Baselined	MISTRAL DESIGN TEAM	AJIT M B	AJIT M B

BLOCK DIAGRAM

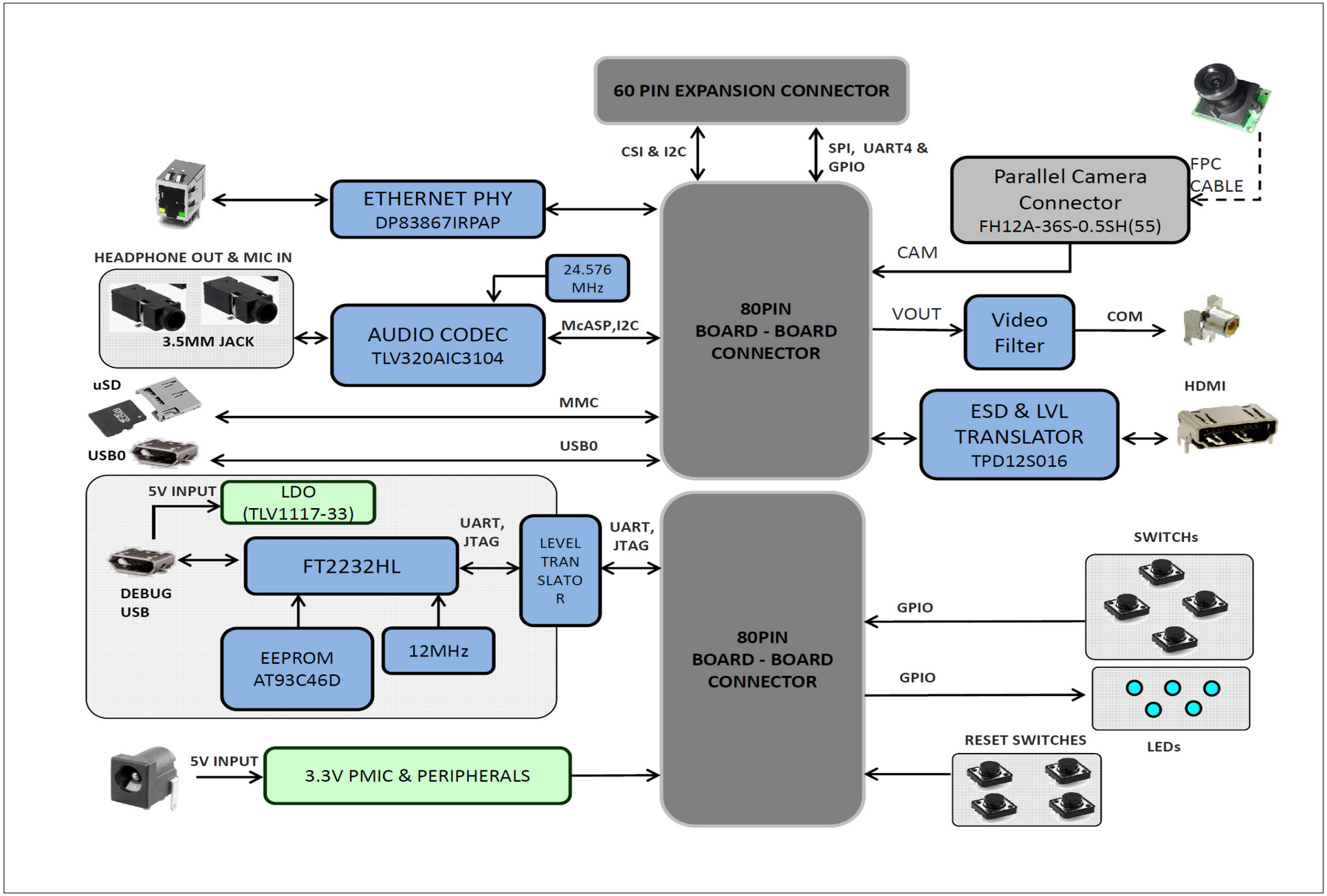

Project : TMDSCSKCC	Designed for TI by Mistral Solutions Pvt Ltd Texas Instruments / MISTRAL	Title: BLOCK DIAGRAM Size: C Document Number: MS_TI_CSK_TMDSCSKCC_SCH_REVB Rev: B Date: Wednesday, January 18, 2017 Sheet 3 of 16

I2C TREE DIAGRAM

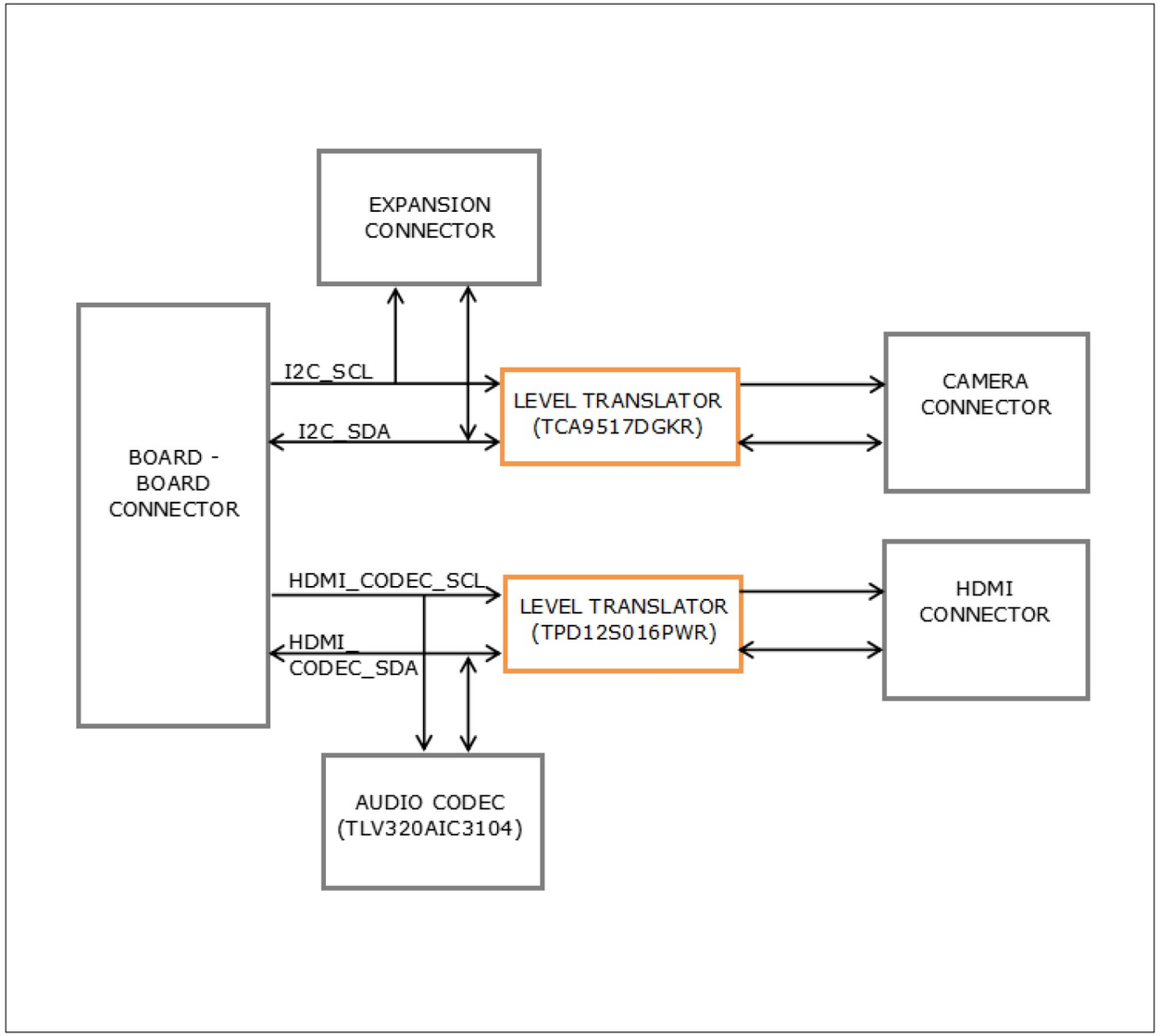

I2C ADDRESS MAPPING

	INTERFACES	ADDRESS (7-BIT)	ADDRESS (8-BIT)
I2C	AUDIO CODEC (TLV320AIC3104)	0x18	0x30(W),0x31(R)
	CAMERA	0x10 (CAMERA SENSOR)	0x20(W),0x21(R) (CAMERA SENSOR)
		0x2D (LVDS MODULE)	0x5A(W),0x5B(R) (LVDS MODULE)

NOTE: PHY ADDRESS : 0X19h

Project : **TMDSCSKCC**	Designed for TI by Mistral Solutions Pvt Ltd Texas Instruments MISTRAL	Title: I2C TREE DIAGRAM Size: C Document Number: MS_TI_CSK_TMDSCSKCC_SCH_REVB Rev: B Date: Wednesday, January 18, 2017 Sheet 4 of 16

POWER FLOW DIAGRAM

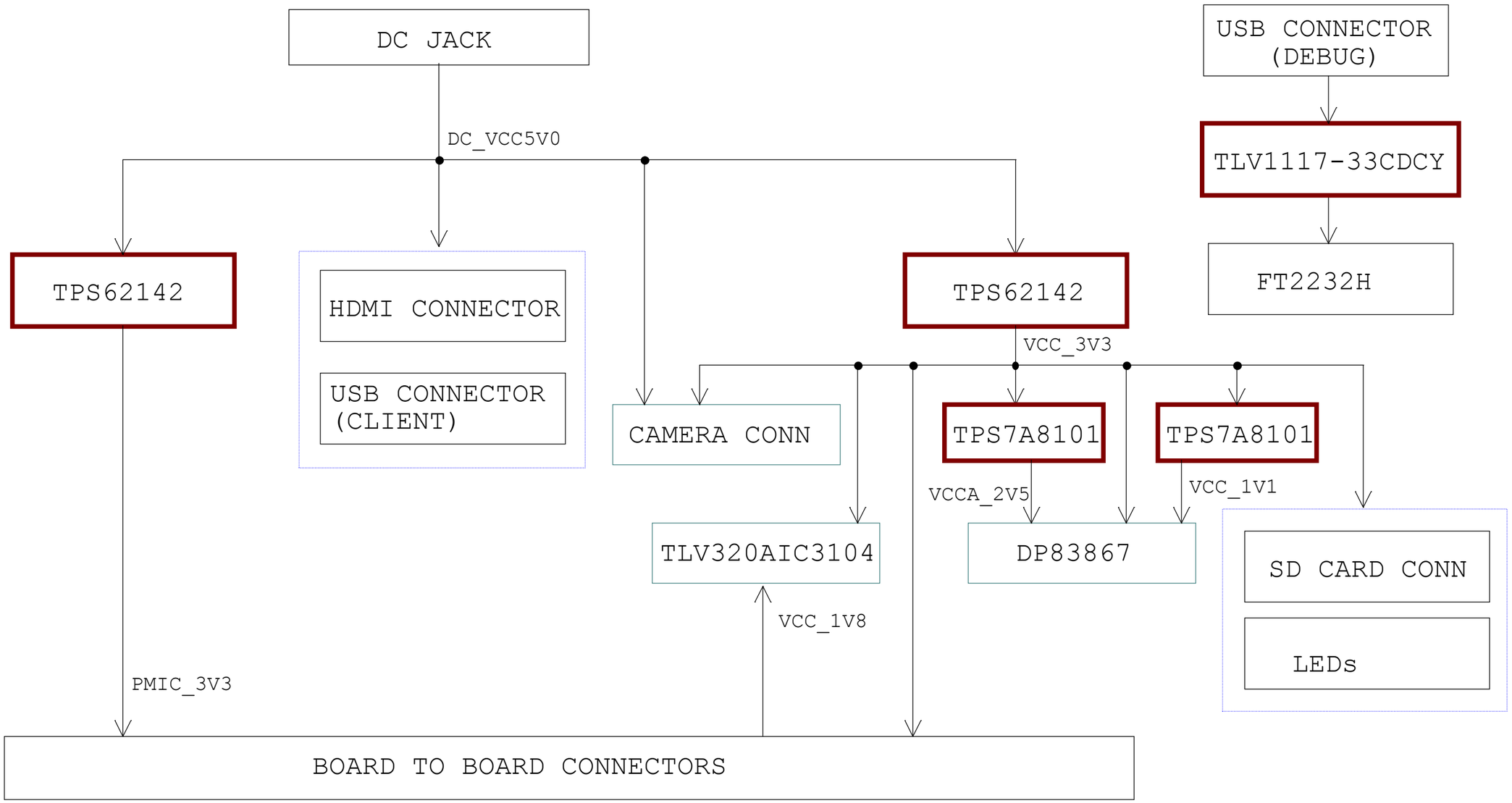

NOTE:

- REGULATORS
- DEVICES
- **Multiple powered device**

Project : **TMDSCSKCC**	Designed for TI by Mistral Solutions Pvt Ltd	Title: POWER FLOW DIAGRAM
		Size: C — Document Number: MS_TI_CSK_TMDSCSKCC_SCH_REVB — Rev: B
		Date: Wednesday, January 18, 2017 — Sheet 5 of 16

POWER-UP SEQUENCE

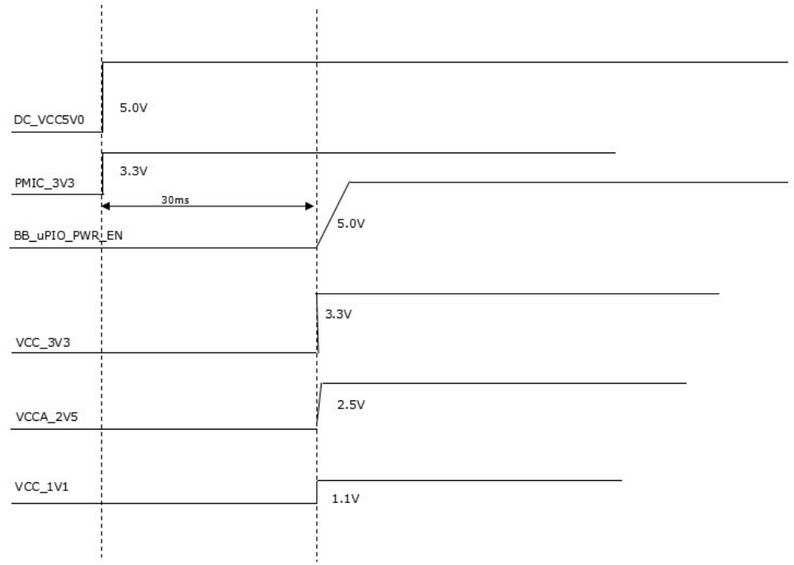

POWER CALCULATION

Camera Starter Kit carrier card

POWER CALCULATION

TMDSCSKCC

INPUT SUPPLY (in V)		5				PMIC3V3	VCC_3V3	
Regulator efficiency						0.9	0.86	
Input Voltage (in V)		Board to Board Conn	3.3	3.3	5*	5	5	
Output Voltage(in V)		1.8	2.5	1.1		3.3	3.3	
Regulator name		TPS62161DSGT	TPS7A8101	TPS7A8101		TPS62142RGTT(U5)	TPS62142RGTT(U8)	5V DC IN
		Active	Active	Active		Active	Active	Active
Description of part	Part Number							
Ethernet PHY External Reg	TPS7A8101(2.5V)						141	108.2093023
Ethernet PHY External Reg	TPS7A8101(1.1V)						125	95.93023256
Audio Codec	TLV320AIC3104	2.5					170	130.4651163
Camera Module	LI-CAM-AR0331-324-1.8				800		300	TBD
Ethernet PHY	DP83867IRPAPT		141	125			22	16.88372093
Expansion Connector(CSI camera)								0
Micro SD Card							80	61.39534884
LED x5							10	7.674418605
24.576MHz Oscillator							15	11.51162791
CURRENT CONSUMPTION (in mA)		2.5				0	863	1232.069767
POWER CONSUMPTION (in mW)		4.5				0	2847.9	6160.348837

Note: All current ratings are in mA

	ACTIVE
CURRENT CONSUMPTION ON 5V POWER INPUT (in mA)	1232.069767
POWER CONSUMPTION ON 5V POWER INPUT (in mW)	6160.348837

	5V DC IN
TMDSCSK388	2210.73
TMDSCSK8127	2660.863
TMDSCSK369	1052.032

USB Bus Powered Devices							3.3	5
							TLV1117-33CDCY	5V USB
USB to JTAG/UART	FT2232HL						130	130
EEPROM	AT93C46DY6-YH-T						2	2
12MHz Oscillator	ASDMB-12.000MHZ-LC-T						15	15

CURRENT CONSUMPTION ON 5V POWER INPUT (in mA)	147

Project : TMDSCSKCC

Designed for TI by Mistral Solutions Pvt Ltd

Texas Instruments MISTRAL

Title: POWER-UP SEQUENCE & CALCULATION

Size: C | Document Number: MS_TI_CSK_TMDSCSKCC_SCH_REVB | Rev: B

Date: Wednesday, January 18, 2017 | Sheet 6 of 16

BOARD TO BOARD CONNECTOR

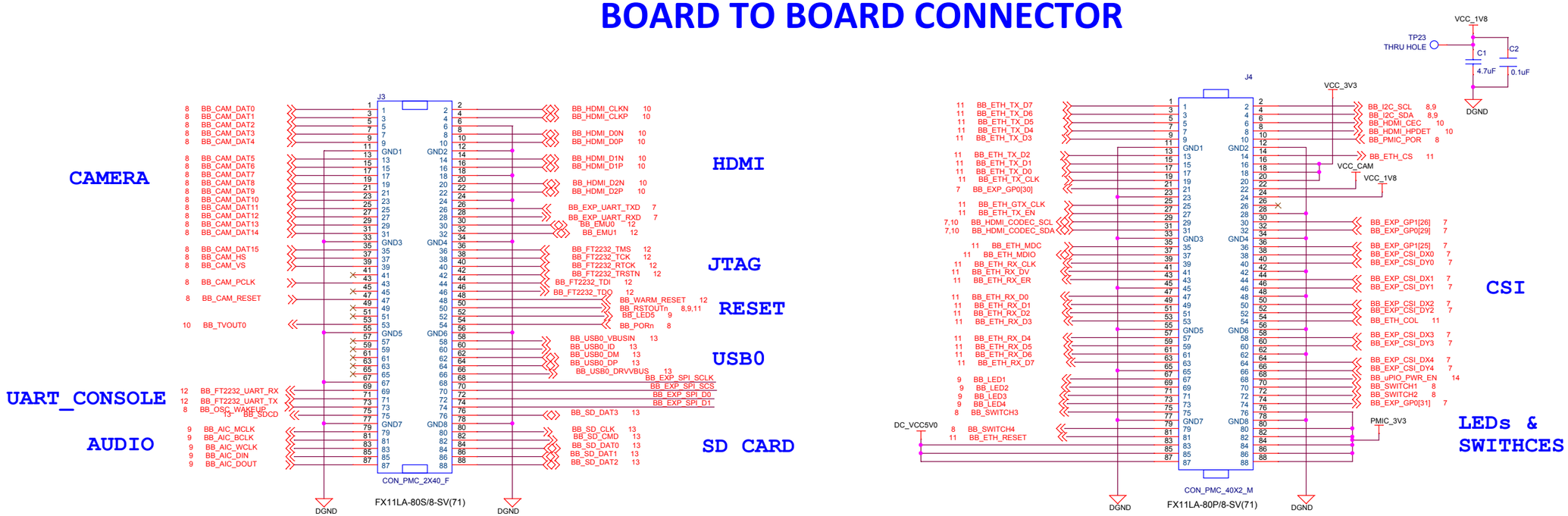

EXPANSION CONNECTOR

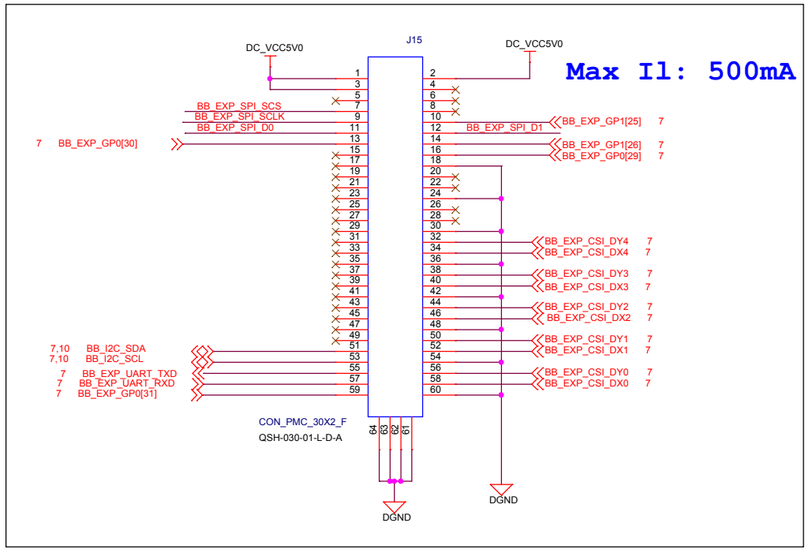

Project : TMDSCSKCC	Designed for TI by Mistral Solutions Pvt Ltd	Title: BOARD TO BOARD & EXPANSION CONNECTOR	
		Size: C	Document Number: MS_TI_CSK_TMDSCSKCC_SCH_REVB	Rev: B
		Date: Wednesday, January 18, 2017	Sheet 7 of 16

CAMERA

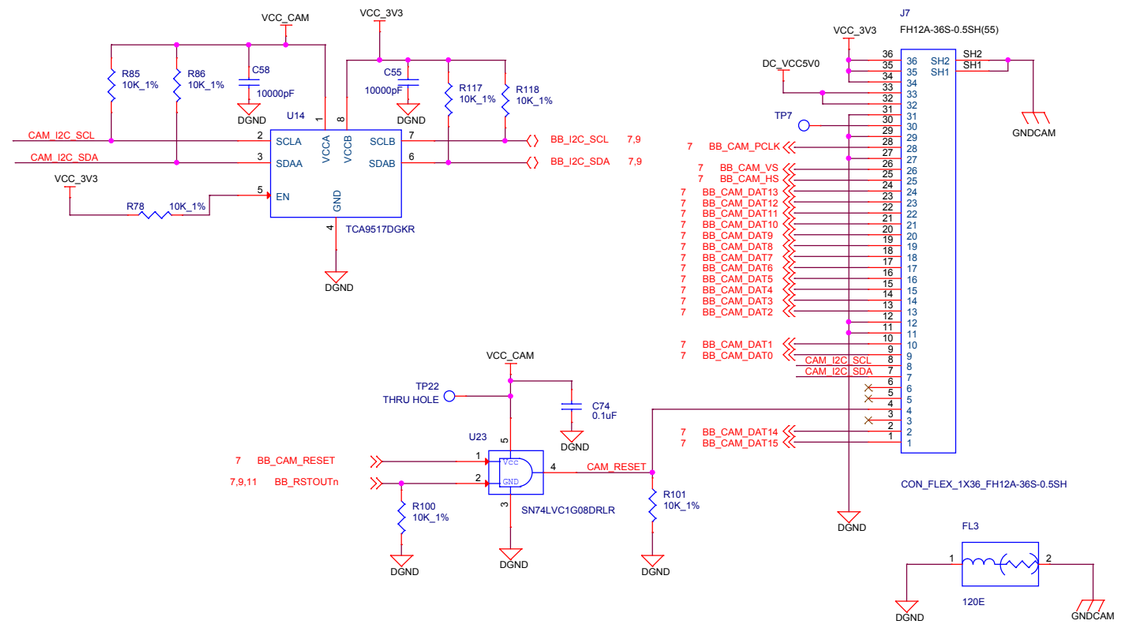

SWITCHs

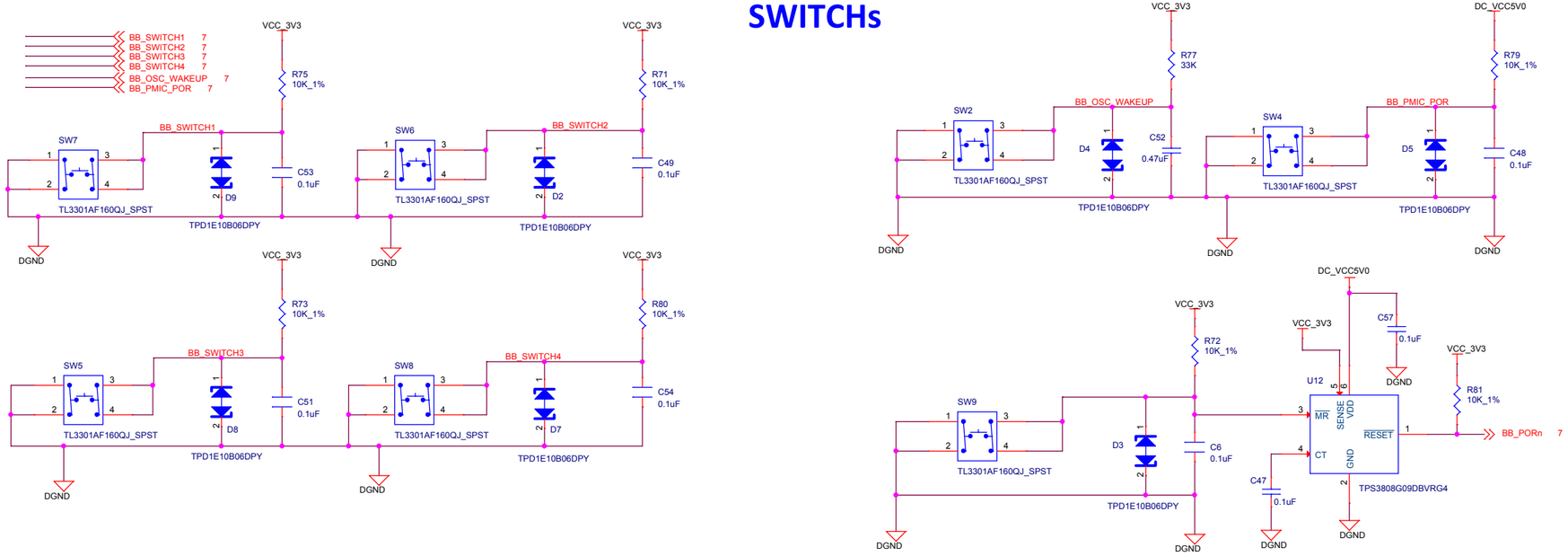

Project : TMDSCSKCC	Designed for TI by Mistral Solutions Pvt Ltd	Title	CAMERA & SWITCHs
		Size C	Document Number MS_TI_CSK_TMDSCSKCC_SCH_REVB — Rev B
		Date: Wednesday, January 18, 2017	Sheet 8 of 16

AUDIO CODEC

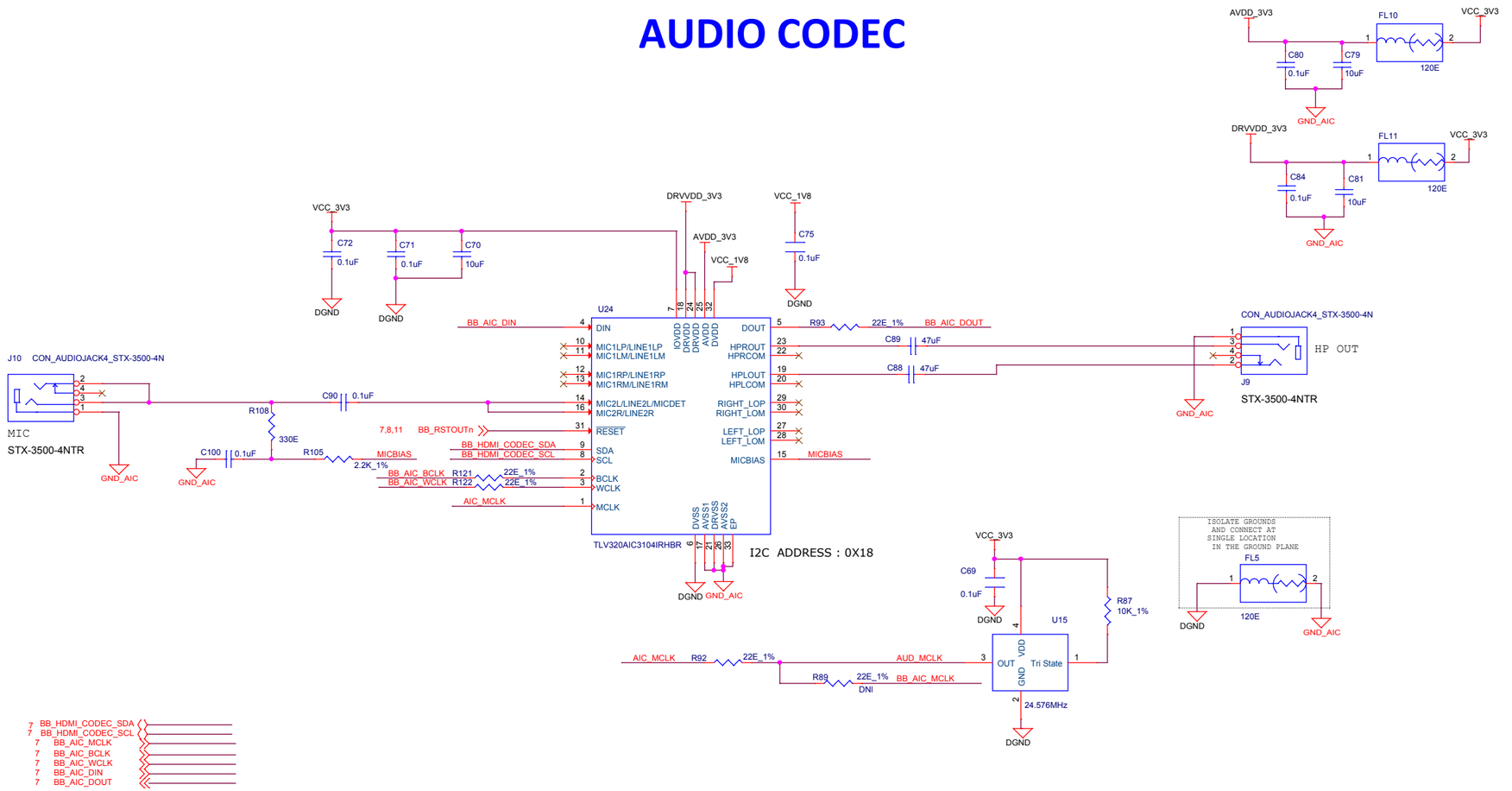

LEDs

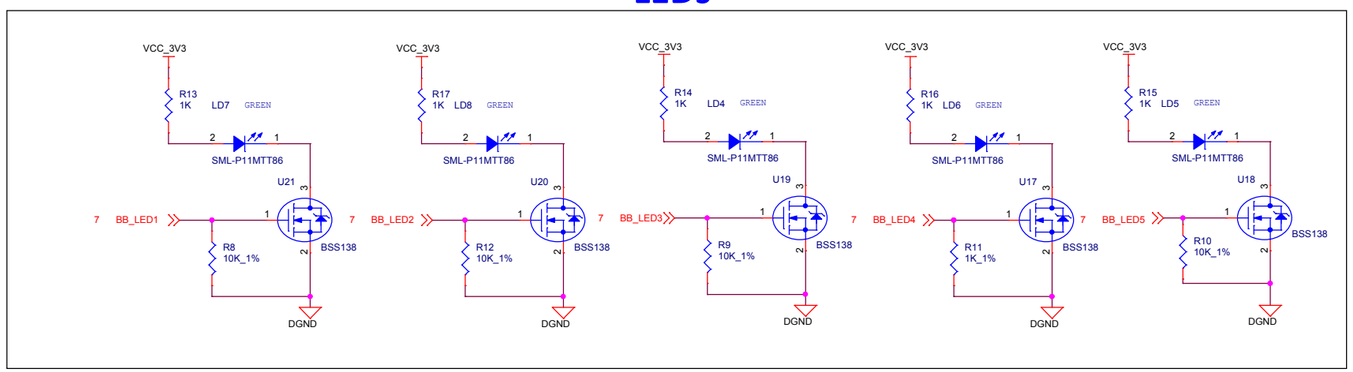

Project : TMDSCSKCC	Designed for TI by Mistral Solutions Pvt Ltd	Title: AUDIO CODEC & LEDs
		Size: C — Document Number: MS_TI_CSK_TMDSCSKCC_SCH_REVB — Rev: B
		Date: Wednesday, January 18, 2017 — Sheet 9 of 16

COMPOSITE VIDEO & HDMI

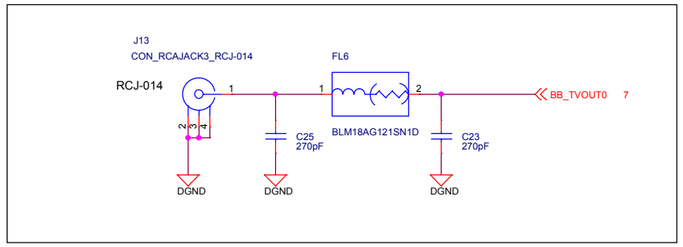

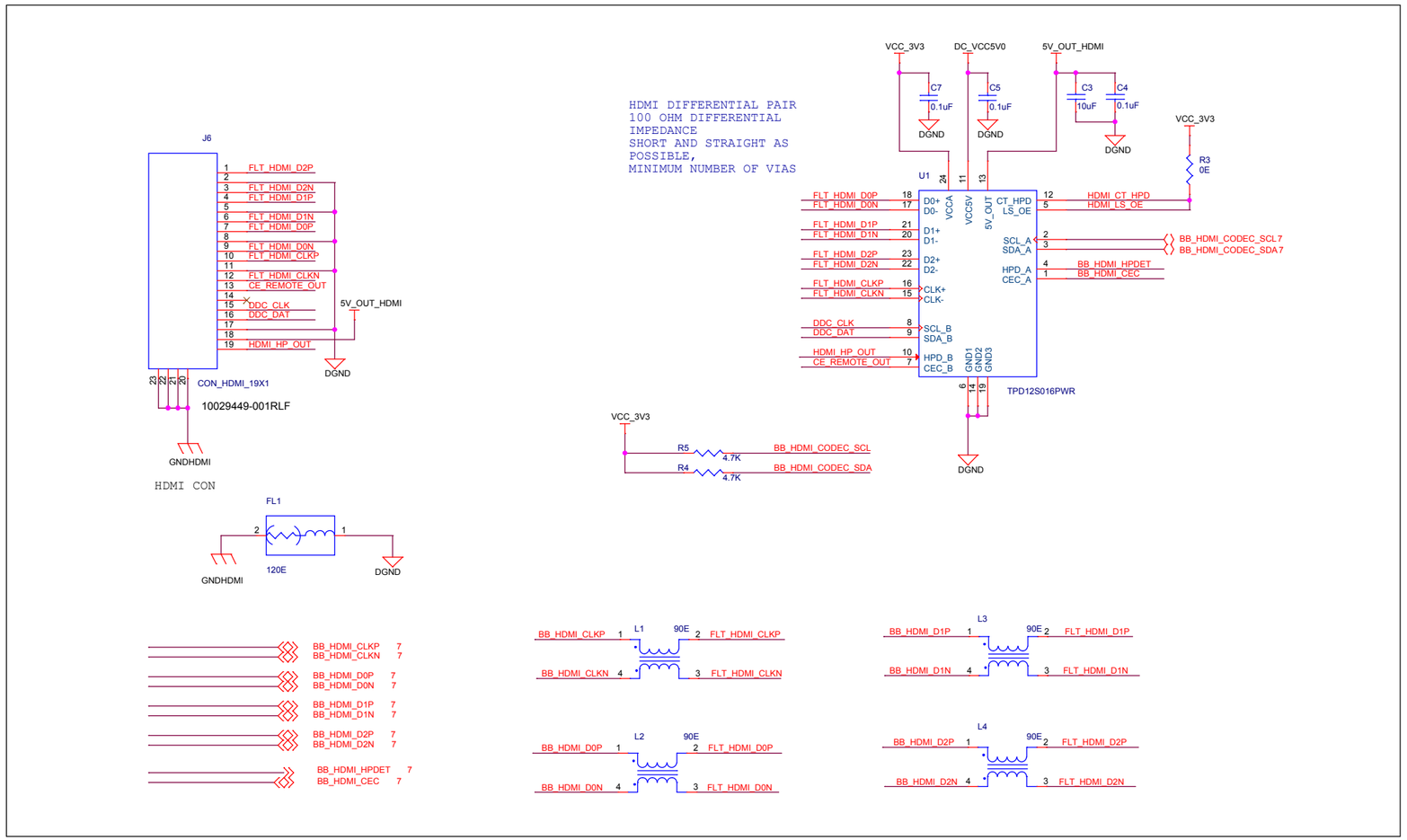

Project :	Designed for TI by Mistral Solutions Pvt Ltd	Title	COMPOSITE VIDEO & HDMI	
TMDSCSKCC	Texas Instruments / MISTRAL	Size: C	Document Number: MS_TI_CSK_TMDSCSKCC_SCH_REVB	Rev: B
		Date: Wednesday, January 18, 2017	Sheet 10 of 16	

ETHERNET PHY

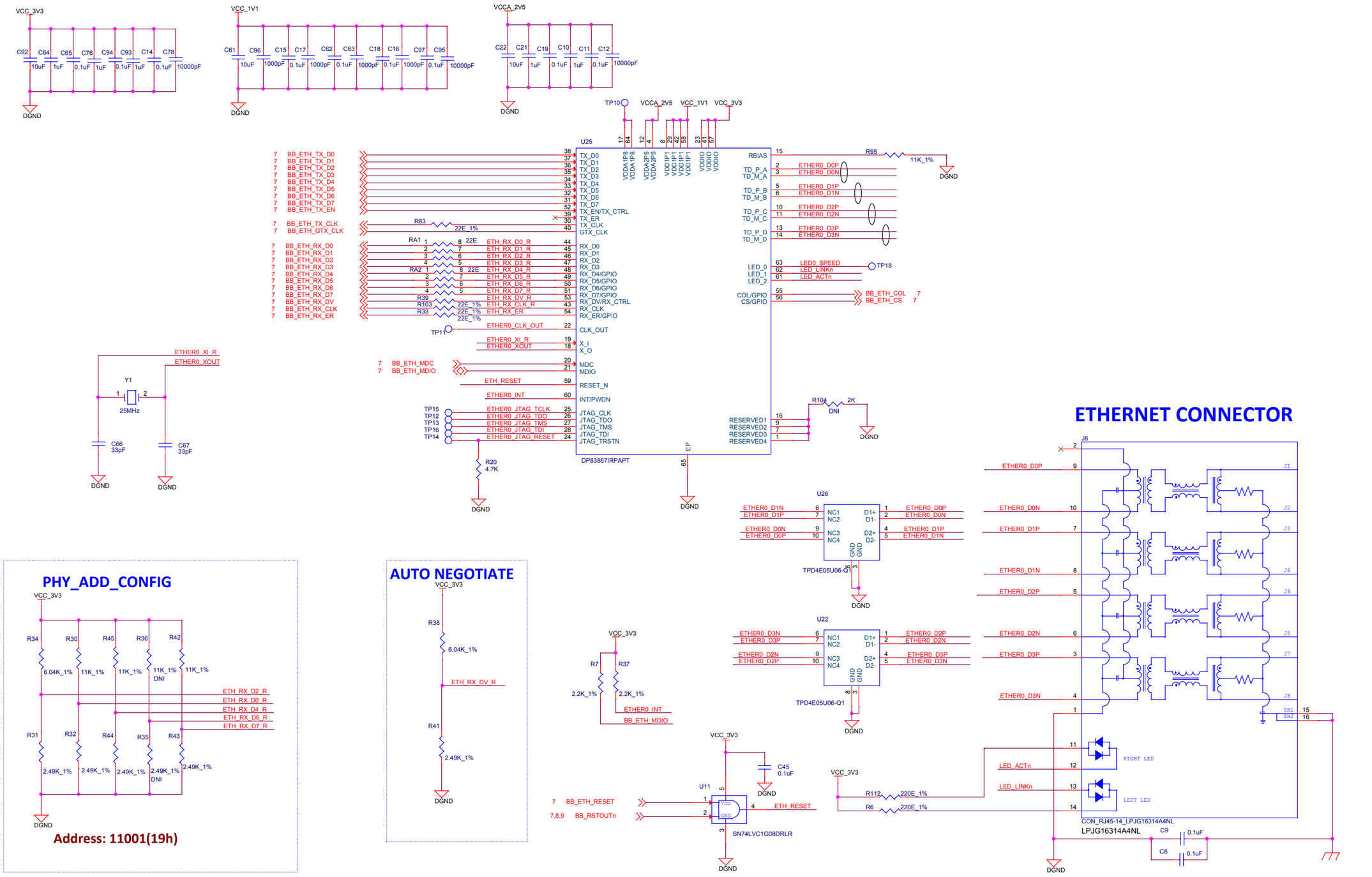

Project : TMDSCSKCC	Designed for TI by Mistral Solutions Pvt Ltd	Title: ETHERNET PHY	
		Size: C	Document Number: MS_TI_CSK_TMDSCSKCC_SCH_REVB	Rev: B
		Date: Wednesday, January 18, 2017	Sheet 11 of 16

Micro USB DEBUG

FT2232 JTAG/DEBUG

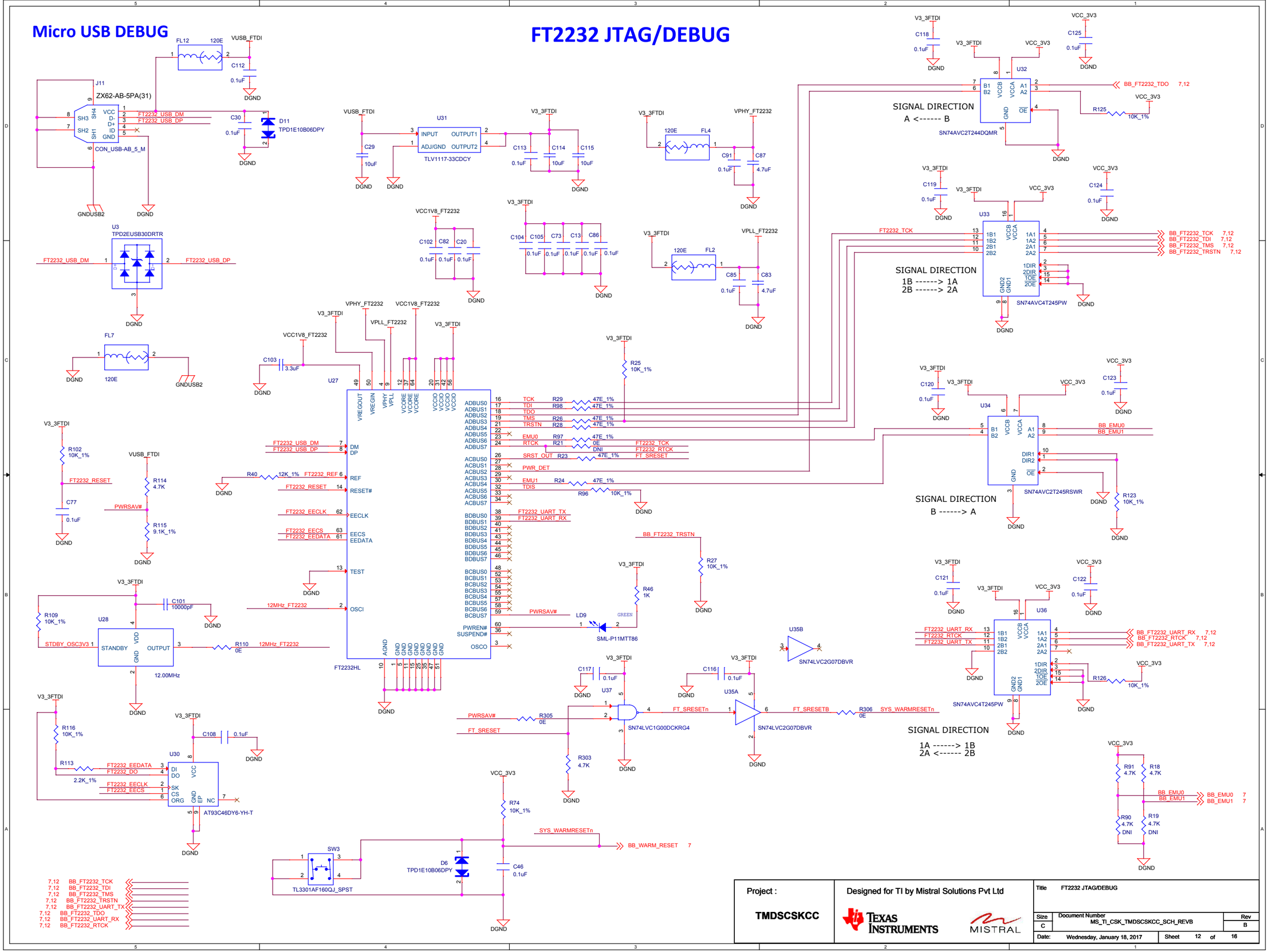

Project : TMDSCSKCC	Designed for TI by Mistral Solutions Pvt Ltd	Title	FT2232 JTAG/DEBUG
		Size C	Document Number MS_TI_CSK_TMDSCSKCC_SCH_REVB — Rev B
		Date: Wednesday, January 18, 2017	Sheet 12 of 16

MicroSD Card & USB

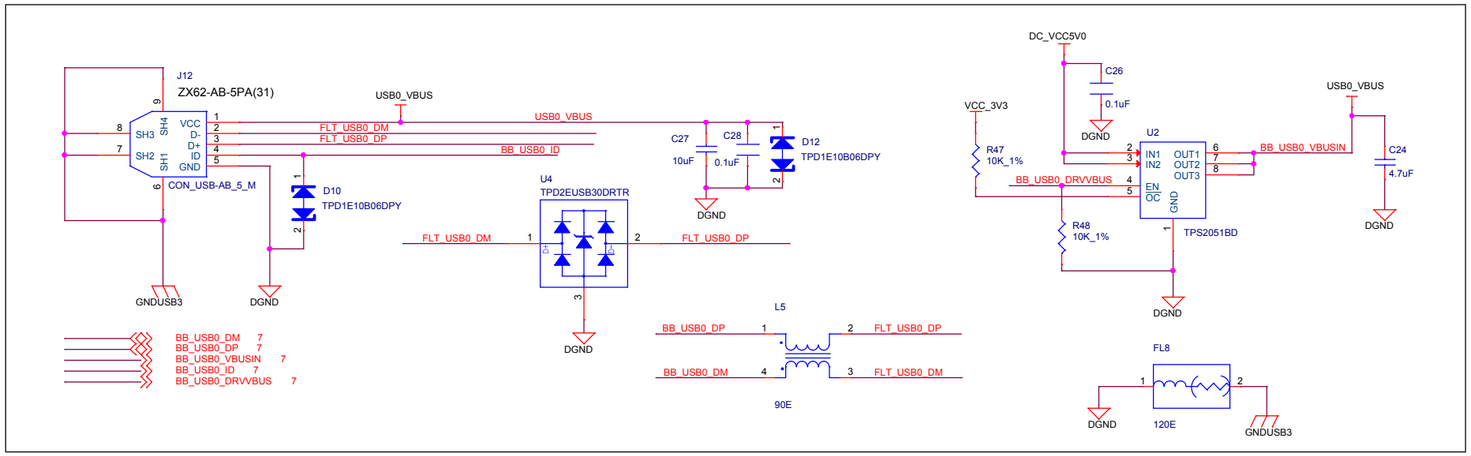

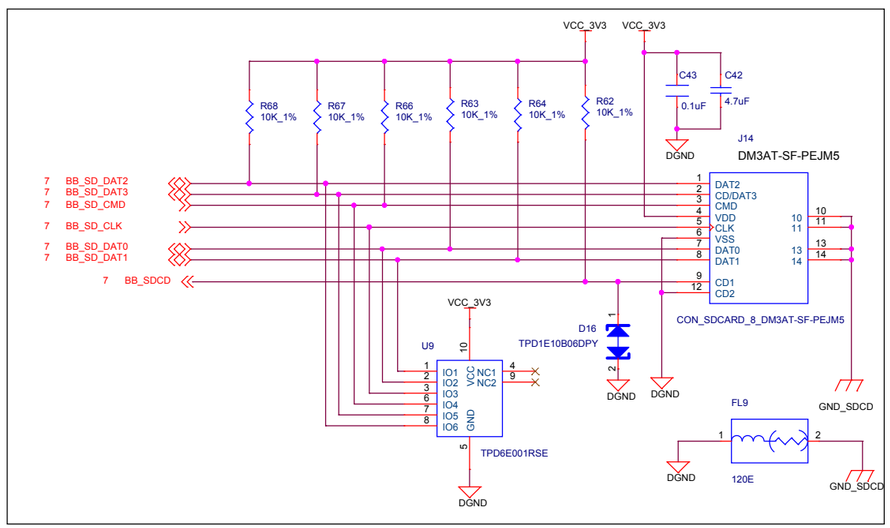

Project : TMDSCSKCC	Designed for TI by Mistral Solutions Pvt Ltd	Title: MicroSD CARD & USB	
		Size: C	Document Number: MS_TI_CSK_TMDSCSKCC_SCH_REVB	Rev: B
		Date: Wednesday, January 18, 2017	Sheet 13 of 16

POWER SUPPLY

ETHERNET POWER

3.3 V TO 2.5 V LDO

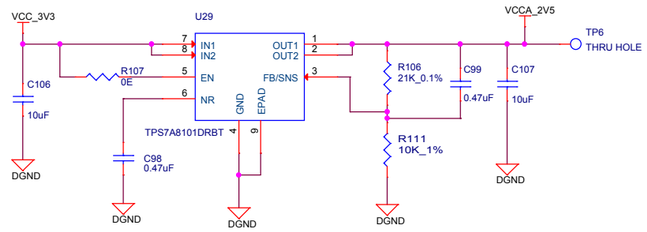

3.3 V TO 1.1 V LDO

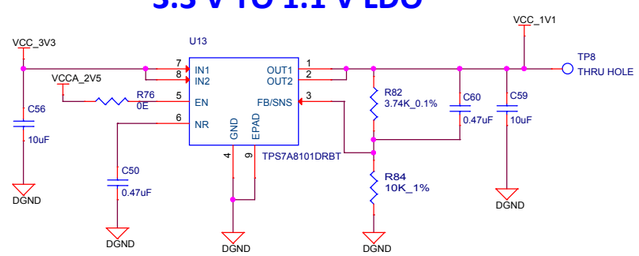

3.3V DC FOR PMIC INPUT

Max Il:
2A @ 3.3V

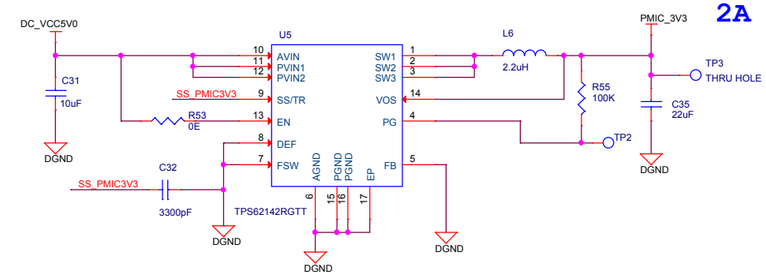

3.3V DC FOR PERIPHERALS

Max Il:
2A @ 3.3V

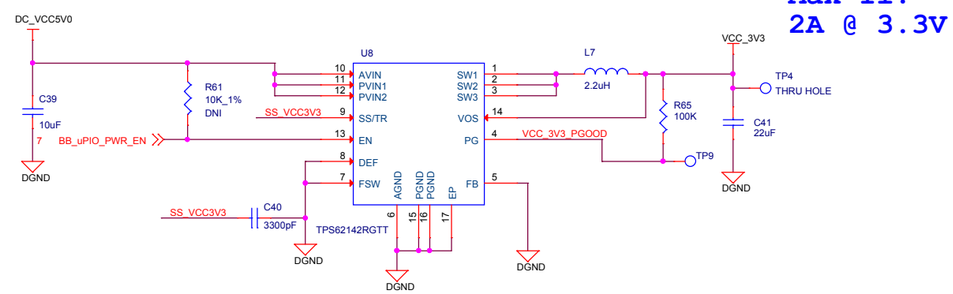

Project : TMDSCSKCC	Designed for TI by Mistral Solutions Pvt Ltd	Title	POWER SUPPLY
		Size: C	Document Number: MS_TI_CSK_TMDSCSKCC_SCH_REVB
		Rev	B
		Date: Wednesday, January 18, 2017	Sheet 14 of 16

OVERVOLTAGE PROTECTION

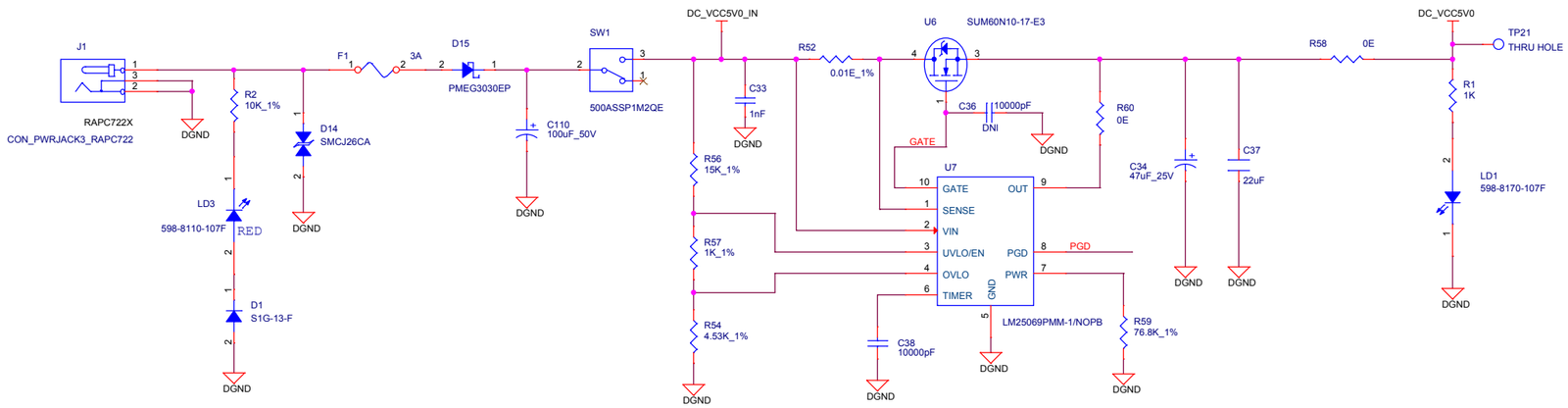

Condition	LED Status(LD3)
Reverse Voltage	ON

Fault Indication

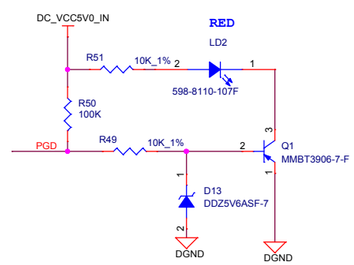

Condition	LED Status(LD2)
DC_VCC5V0_IN between 4.5 to 5.25V	OFF
DC_VCC5V0_IN above 5.25V or below 4.5V	ON

Note:-

When fault is indicated ,set to proper voltage and power cycle the board.

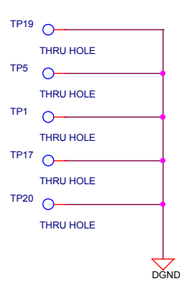

Project : TMDSCSKCC	Designed for TI by Mistral Solutions Pvt Ltd	Title: OVERVOLTAGE PROTECTION
		Size: C — Document Number: MS_TI_CSK_TMDSCSKCC_SCH_REVB — Rev: B
		Date: Wednesday, January 18, 2017 — Sheet 15 of 16

HARDWARE SCHEMATICS

MOUNTING HOLES

MH1 — MPMS 002 0005 PH
MH2 — MPMS 002 0005 PH
MH3 — MPMS 002 0005 PH
MH4 — MPMS 002 0005 PH
MH5 — RM2X8MM 2701
MH6 — RM2X8MM 2701
MH7 — RM2X8MM 2701

FIDUCIALS

FID1 — FID_40X80
FID2 — FID_40X80
FID3 — FID_40X80
FID4 — FID_40X80
FID5 — FID_40X80
FID6 — FID_40X80

CAMERA MODULE & FPC CABLE

H1 — 050R36-127B
H2 — LI-CAM-AR0331-324-1.8

LOGOs & LABELs

PCB LOGO — Texas Intruments
PCB LOGO — Pb-Free
PCB LOGO — For Evaluation only; not FCC approved for resale

KIT CONTENT

USB CABLE

0687840001
H3

ETHERNET CABLE

N210-007-GY
H8

MicroSD CARD READER

DA-70310-2
H13

POWER CORD

2096763
H14

STANDOFFs

H5 — 960020010
H6 — 960020010
H7 — 960020010
H9 — 9774080243R
H10 — 9774080243R
H11 — 9774080243R
H12 — 9774080243R
H15 — 9774080243R
H16 — 9774080243R
H17 — 9774080243R

PCB Number=PRJ_Number
PCB Rev:=PCB_Rev
PCB1

Serial No:
PCB Label
Size: 1.3" x 0.12 "
LBL1

ASSY REV
PCB Label
Size: 0.9" x 0.12 "
LBL2

Label Assembly Note
ZZ1
The boards and components must be baked before assembly

Label Assembly Note
ZZ2
Provide serial numbers to the assembled boards for identification

Label Assembly Note
ZZ3
Please carry out the cold points check verification and provide the report for each assembled board

Label Assembly Note
ZZ4
The assembled board are wrapped in ESD Covers(individual) and packed securely before shipment.

Label Assembly Note
ZZ5
All MSL components should be baked as per JEDEC standard

Label Assembly Note
ZZ6
PCB should be baked at 120 degree for 8 hours

Label Assembly Note
ZZ7
These assemblies must comply with workmanship standards IPC-A-610 Class 2, unless otherwise specified.

Label Assembly Note
ZZ8
These assemblies are ESD sensitive, ESD precautions shall be observed.

Label Assembly Note
ZZ9
These assemblies must be clean and free from flux and all contaminants. Use of no clean flux is not acceptable.

Project : TMDSCSKCC	Designed for TI by Mistral Solutions Pvt Ltd	Title: HARDWARE SCHEMATICS	
		Size: C	Document Number: MS_TI_CSK_TMDSCSKCC_SCH_REVB	Rev: B
		Date: Wednesday, January 18, 2017	Sheet 16 of 16