Wireless MCU RF

Wireless MCU IO block placed on page 2

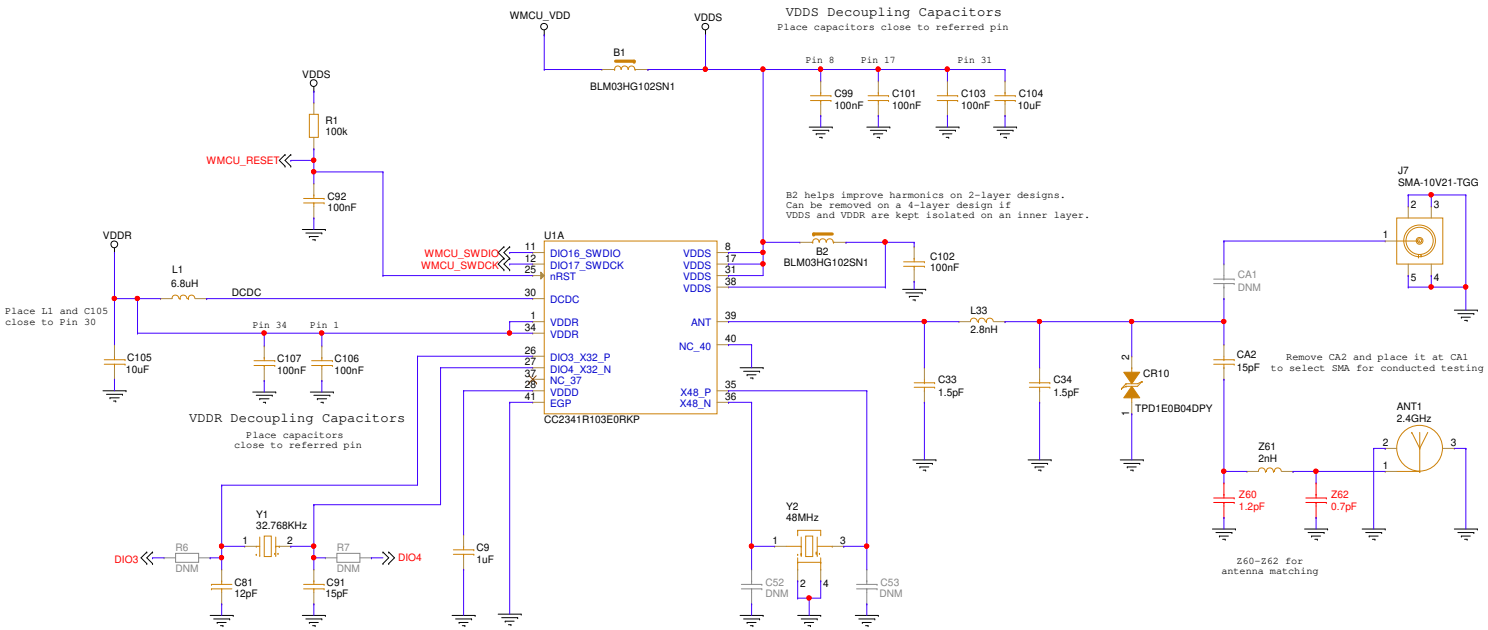

Title: LP-EM-CC2341R10		Texas Instruments
Drawn: BK		PN: MCU198
Checked: Dallas HW Apps		
Size: A3	Rev: C	Sheet: 1 of 4
Date: Thursday, November 12, 2026		

BoosterPack Headers and Peripherals

Boosterpack J1/J3 header

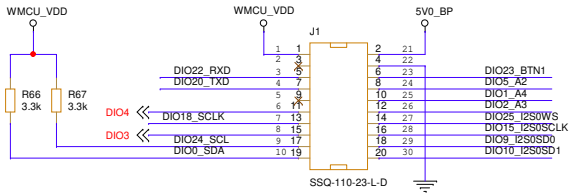

Boosterpack J2/J4 header

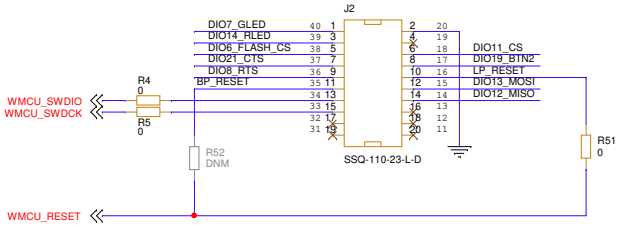

Wireless MCU IO block

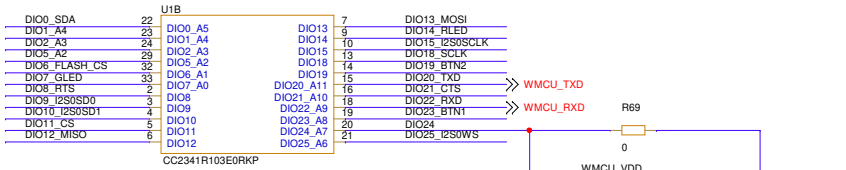

Opamp (U7)

U7 was used for internal evaluation only.
Not required for normal operation of the LaunchPad.

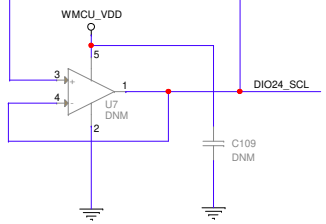

Buttons / LEDs

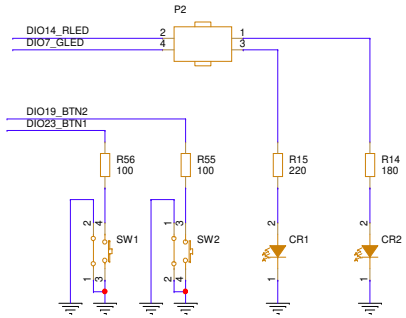

5V and 3V headers

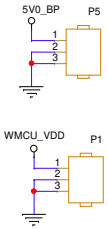

External flash

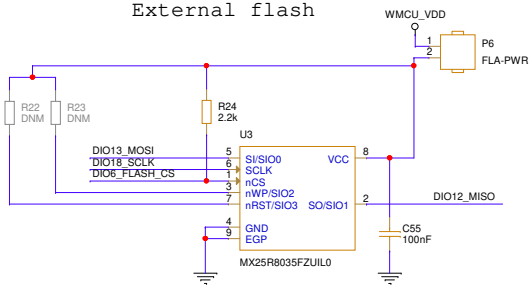

Coin Cell Battery Holder

To bypass the polarity inversion protection, populate resistor R68

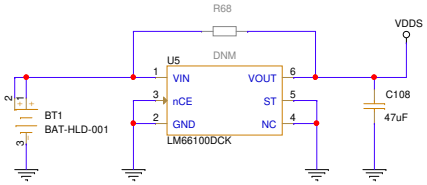

Title: LP-EM-CC2341R10		Texas Instruments
Drawn: BK		PN: MCU198
Checked: Dallas HW Apps		
Size: A3	Rev: C	Sheet: 2 of 4
Date: Thursday, November 12, 2026		

XDS110 Debugger Interface

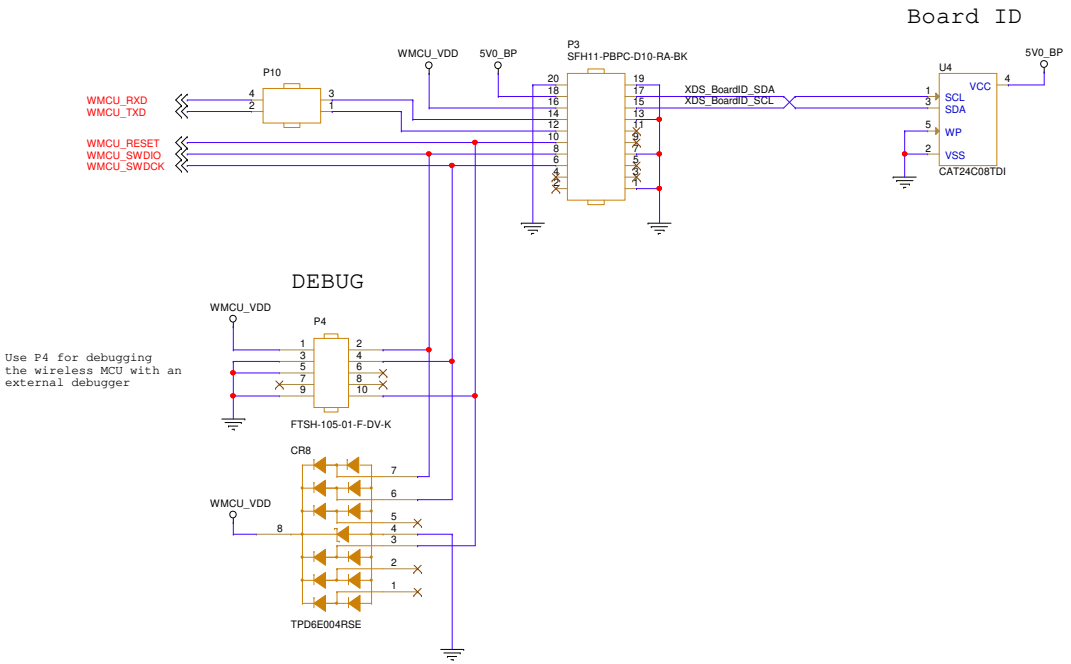

Title: LP-EM-CC2341R10	Texas Instruments
Drawn: BK	PN: MCU198
Checked: Dallas HW Apps	
Size: A3 Rev: C Sheet: 3 of 4	
Date: Thursday, November 12, 2026	

Mechanical

Jumpers (P1)

M1 SNT-100-BK-G
M2 SNT-100-BK-G
M7 SNT-100-BK-G
M8 SNT-100-BK-G
M9 SNT-100-BK-G

Mounting Holes

MH1 HOLE_3.2mm_PAD_3.8mm_PTH
MH2 HOLE_3.2mm_PAD_3.8mm_PTH
MH3 HOLE_3.2mm_PAD_3.8mm_PTH
MH4 HOLE_3.2mm_PAD_3.8mm_PTH
MH5 HOLE_1.1mm_PTH

Standoffs

M3 DCB-12D
M4 DCB-12D
M5 DCB-12D
M6 DCB-12D

Labels

LBL1 TI_LOGO
LBL2 TRASH_7mm
LBL3 ESD_LABEL_5X5mm
LBL4 CE_label
LBL5 FCC dsc LABEL_FOR_EVALUATION_ONLY

Fiducials

FIDU1 FIDU2 FIDU3 FIDU4 FIDU5 FIDU6

Title: LP-EM-CC2341R10	Texas Instruments
Drawn: BK	PN: MCU198
Checked: Dallas HW Apps	
Size: A3 Rev: C	Sheet: 4 of 4
Date: Thursday, November 12, 2026	