TAPE AND REEL INFORMATION

REEL DIMENSIONS

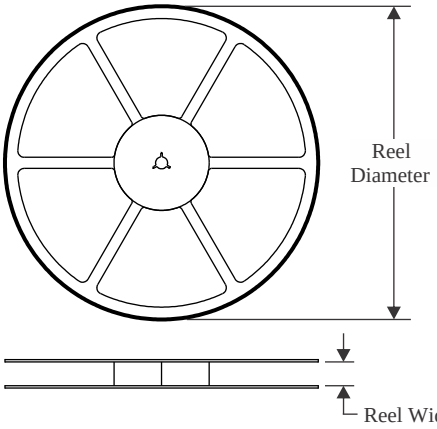

TAPE DIMENSIONS

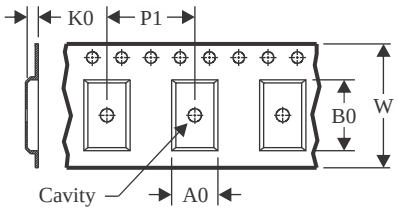

A0	Dimension designed to accommodate the component width
B0	Dimension designed to accommodate the component length
K0	Dimension designed to accommodate the component thickness
W	Overall width of the carrier tape
P1	Pitch between successive cavity centers

QUADRANT ASSIGNMENTS FOR PIN 1 ORIENTATION IN TAPE

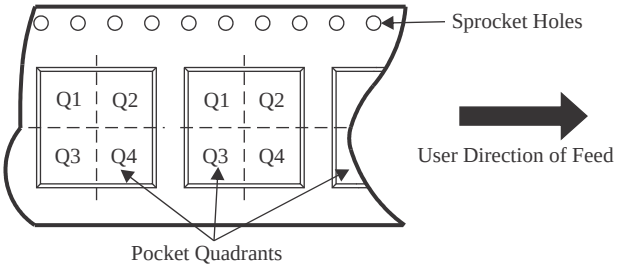

*All dimensions are nominal

Device	Package Type	Package Drawing	Pins	SPQ	Reel Diameter (mm)	Reel Width W1 (mm)	A0 (mm)	B0 (mm)	K0 (mm)	P1 (mm)	W (mm)	Pin1 Quadrant
BQ24100RHLR	VQFN	RHL	20	3000	330.0	12.4	3.8	4.8	1.6	8.0	12.0	Q1
BQ24103ARHLR	VQFN	RHL	20	3000	330.0	12.4	3.8	4.8	1.6	8.0	12.0	Q1
BQ24103ARHLT	VQFN	RHL	20	250	180.0	12.4	3.8	4.8	1.6	8.0	12.0	Q1
BQ24103RHLR	VQFN	RHL	20	3000	330.0	12.4	3.8	4.8	1.6	8.0	12.0	Q1
BQ24104RHLR	VQFN	RHL	20	3000	330.0	12.4	3.8	4.8	1.6	8.0	12.0	Q1
BQ24104RHLT	VQFN	RHL	20	250	180.0	12.4	3.8	4.8	1.6	8.0	12.0	Q1
BQ24105RHLR	VQFN	RHL	20	3000	330.0	12.4	3.8	4.8	1.6	8.0	12.0	Q1
BQ24108RHLR	VQFN	RHL	20	3000	330.0	12.4	3.8	4.8	1.6	8.0	12.0	Q1
BQ24109RHLR	VQFN	RHL	20	3000	330.0	12.4	3.8	4.8	1.3	8.0	12.0	Q1
BQ24109RHLR	VQFN	RHL	20	3000	330.0	12.4	3.8	4.8	1.6	8.0	12.0	Q1
BQ24109RHLT	VQFN	RHL	20	250	180.0	12.4	3.8	4.8	1.3	8.0	12.0	Q1
BQ24109RHLT	VQFN	RHL	20	250	180.0	12.4	3.8	4.8	1.6	8.0	12.0	Q1
BQ24113ARHLR	VQFN	RHL	20	3000	330.0	12.4	3.8	4.8	1.6	8.0	12.0	Q1
BQ24113ARHLT	VQFN	RHL	20	250	180.0	12.4	3.8	4.8	1.6	8.0	12.0	Q1
BQ24113RHLR	VQFN	RHL	20	3000	330.0	12.4	3.8	4.8	1.6	8.0	12.0	Q1
BQ24115RHLR	VQFN	RHL	20	3000	330.0	12.4	3.8	4.8	1.6	8.0	12.0	Q1

TAPE AND REEL BOX DIMENSIONS

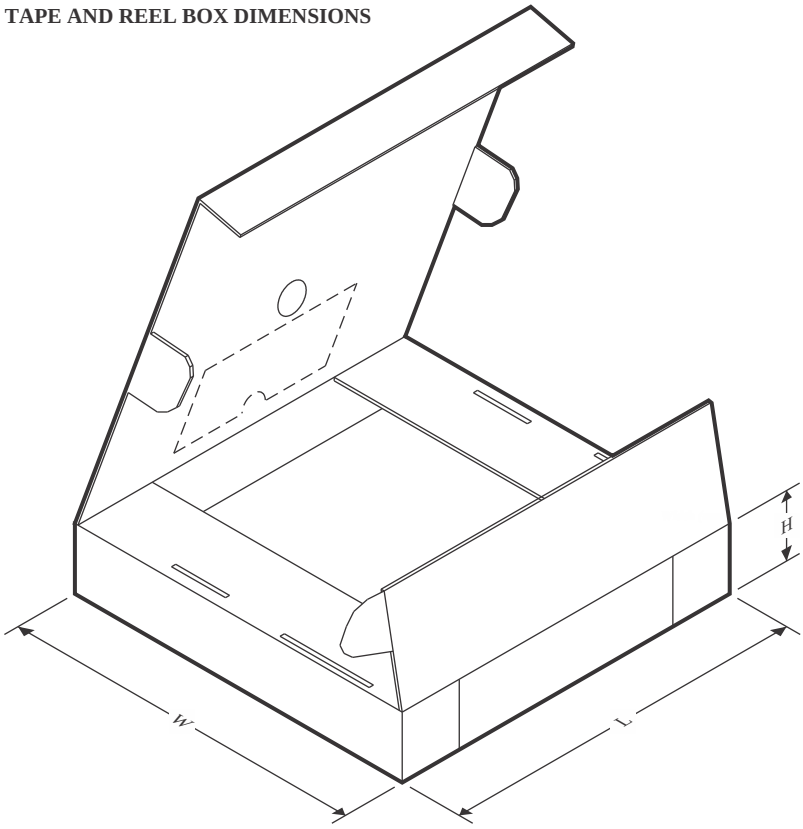

*All dimensions are nominal

Device	Package Type	Package Drawing	Pins	SPQ	Length (mm)	Width (mm)	Height (mm)
BQ24100RHLR	VQFN	RHL	20	3000	367.0	367.0	35.0
BQ24103ARHLR	VQFN	RHL	20	3000	367.0	367.0	35.0
BQ24103ARHLT	VQFN	RHL	20	250	210.0	185.0	35.0
BQ24103RHLR	VQFN	RHL	20	3000	367.0	367.0	35.0
BQ24104RHLR	VQFN	RHL	20	3000	367.0	367.0	35.0
BQ24104RHLT	VQFN	RHL	20	250	210.0	185.0	35.0
BQ24105RHLR	VQFN	RHL	20	3000	367.0	367.0	35.0
BQ24108RHLR	VQFN	RHL	20	3000	367.0	367.0	35.0
BQ24109RHLR	VQFN	RHL	20	3000	367.0	367.0	38.0
BQ24109RHLR	VQFN	RHL	20	3000	367.0	367.0	35.0
BQ24109RHLT	VQFN	RHL	20	250	195.0	200.0	45.0
BQ24109RHLT	VQFN	RHL	20	250	210.0	185.0	35.0
BQ24113ARHLR	VQFN	RHL	20	3000	367.0	367.0	35.0
BQ24113ARHLT	VQFN	RHL	20	250	210.0	185.0	35.0
BQ24113RHLR	VQFN	RHL	20	3000	367.0	367.0	35.0
BQ24115RHLR	VQFN	RHL	20	3000	367.0	367.0	35.0