TAPE AND REEL INFORMATION

REEL DIMENSIONS

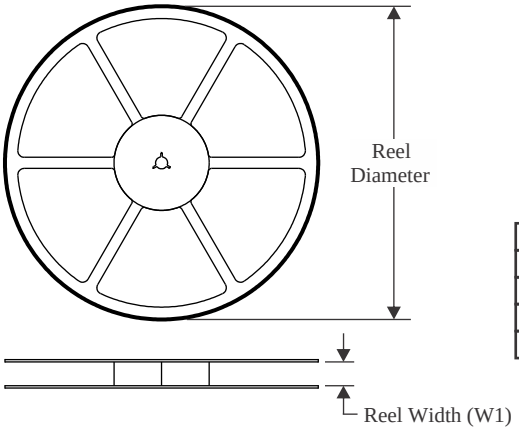

TAPE DIMENSIONS

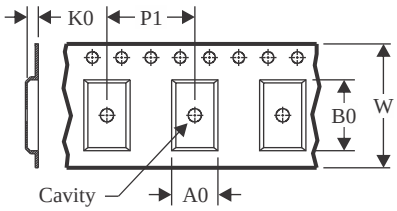

A0	Dimension designed to accommodate the component width
B0	Dimension designed to accommodate the component length
K0	Dimension designed to accommodate the component thickness
W	Overall width of the carrier tape
P1	Pitch between successive cavity centers

QUADRANT ASSIGNMENTS FOR PIN 1 ORIENTATION IN TAPE

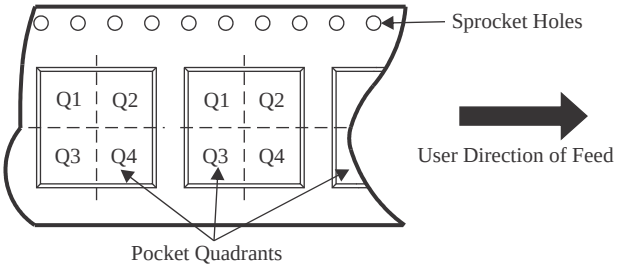

*All dimensions are nominal

Device	Package Type	Package Drawing	Pins	SPQ	Reel Diameter (mm)	Reel Width W1 (mm)	A0 (mm)	B0 (mm)	K0 (mm)	P1 (mm)	W (mm)	Pin1 Quadrant
BQ24257RGER	VQFN	RGE	24	3000	330.0	12.4	4.25	4.25	1.15	8.0	12.0	Q2
BQ24257RGET	VQFN	RGE	24	250	180.0	12.4	4.25	4.25	1.15	8.0	12.0	Q2
BQ24257YFFR	DSBGA	YFF	30	3000	180.0	8.4	2.09	2.59	0.78	4.0	8.0	Q1
BQ24257YFFT	DSBGA	YFF	30	250	180.0	8.4	2.09	2.59	0.78	4.0	8.0	Q1

TAPE AND REEL BOX DIMENSIONS

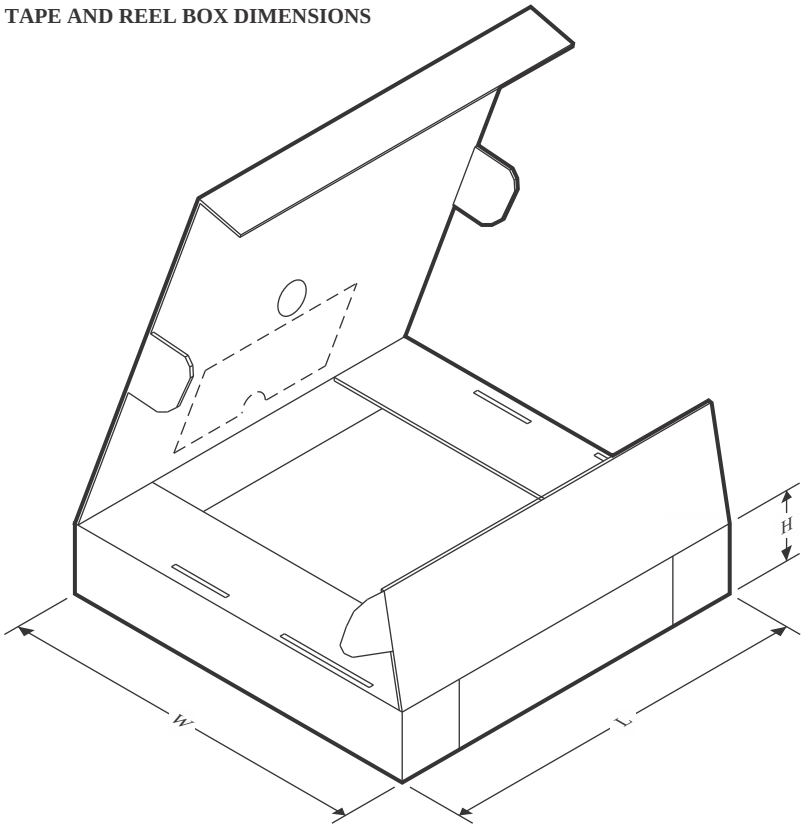

*All dimensions are nominal

Device	Package Type	Package Drawing	Pins	SPQ	Length (mm)	Width (mm)	Height (mm)
BQ24257RGER	VQFN	RGE	24	3000	346.0	346.0	33.0
BQ24257RGET	VQFN	RGE	24	250	182.0	182.0	20.0
BQ24257YFFR	DSBGA	YFF	30	3000	182.0	182.0	20.0
BQ24257YFFT	DSBGA	YFF	30	250	182.0	182.0	20.0