TAPE AND REEL INFORMATION

REEL DIMENSIONS

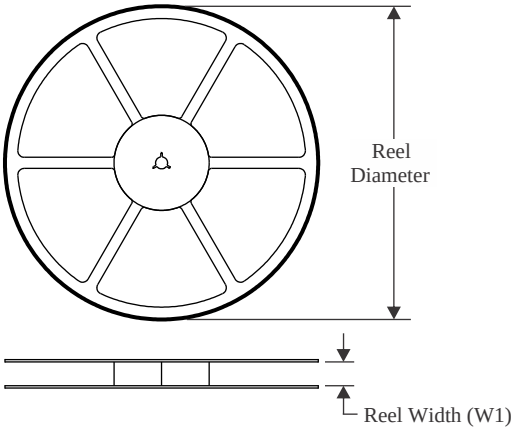

TAPE DIMENSIONS

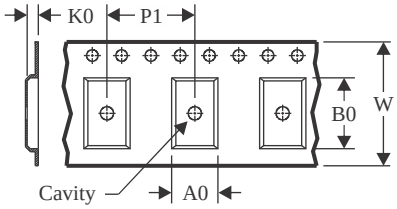

A0	Dimension designed to accommodate the component width
B0	Dimension designed to accommodate the component length
K0	Dimension designed to accommodate the component thickness
W	Overall width of the carrier tape
P1	Pitch between successive cavity centers

QUADRANT ASSIGNMENTS FOR PIN 1 ORIENTATION IN TAPE

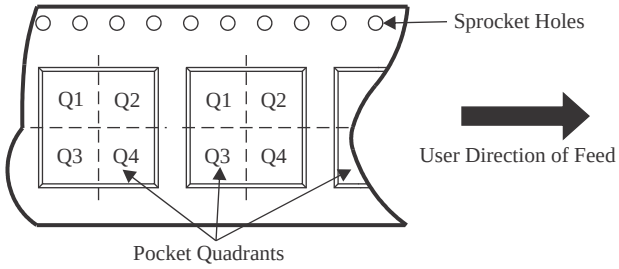

*All dimensions are nominal

Device	Package Type	Package Drawing	Pins	SPQ	Reel Diameter (mm)	Reel Width W1 (mm)	A0 (mm)	B0 (mm)	K0 (mm)	P1 (mm)	W (mm)	Pin1 Quadrant
BQ25890RTWR	WQFN	RTW	24	3000	330.0	12.4	4.25	4.25	1.15	8.0	12.0	Q2
BQ25890RTWT	WQFN	RTW	24	250	180.0	12.4	4.25	4.25	1.15	8.0	12.0	Q2
BQ25890RTWT	WQFN	RTW	24	250	180.0	12.4	4.25	4.25	1.15	8.0	12.0	Q2
BQ25892RTWR	WQFN	RTW	24	3000	330.0	12.4	4.25	4.25	1.15	8.0	12.0	Q2
BQ25892RTWT	WQFN	RTW	24	250	180.0	12.4	4.25	4.25	1.15	8.0	12.0	Q2
BQ25892RTWT	WQFN	RTW	24	250	180.0	12.4	4.25	4.25	1.15	8.0	12.0	Q2

TAPE AND REEL BOX DIMENSIONS

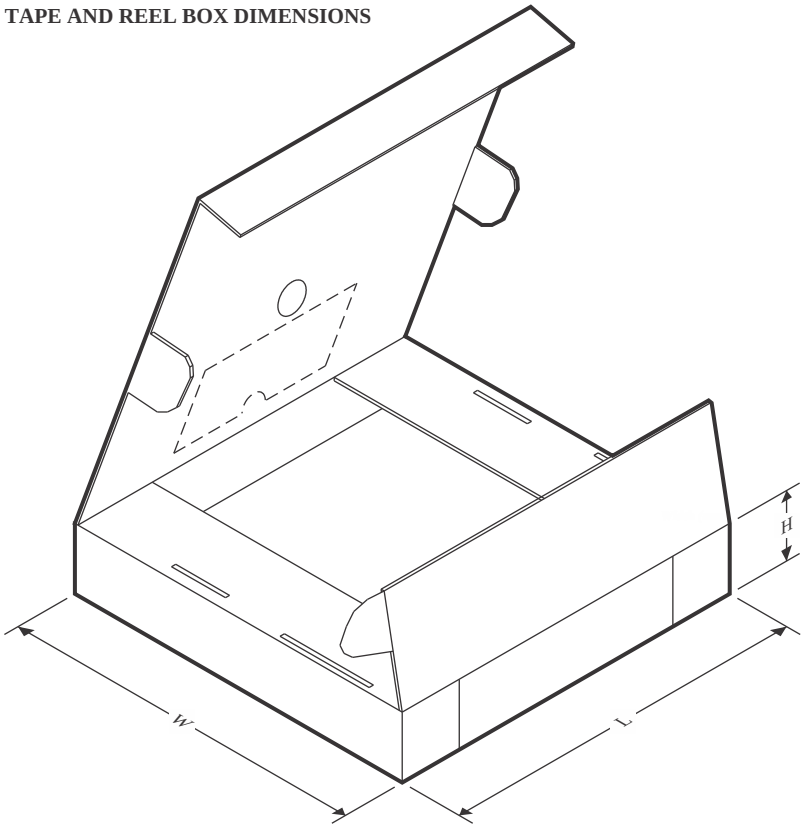

*All dimensions are nominal

Device	Package Type	Package Drawing	Pins	SPQ	Length (mm)	Width (mm)	Height (mm)
BQ25890RTWR	WQFN	RTW	24	3000	346.0	346.0	33.0
BQ25890RTWT	WQFN	RTW	24	250	210.0	185.0	35.0
BQ25890RTWT	WQFN	RTW	24	250	210.0	185.0	35.0
BQ25892RTWR	WQFN	RTW	24	3000	367.0	367.0	35.0
BQ25892RTWT	WQFN	RTW	24	250	210.0	185.0	35.0
BQ25892RTWT	WQFN	RTW	24	250	210.0	185.0	35.0