TAPE AND REEL INFORMATION

REEL DIMENSIONS

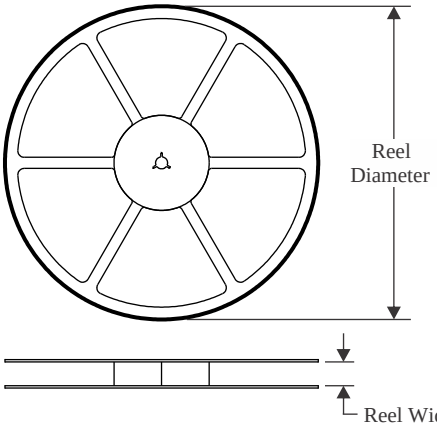

TAPE DIMENSIONS

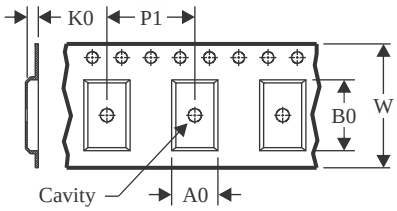

A0	Dimension designed to accommodate the component width
B0	Dimension designed to accommodate the component length
K0	Dimension designed to accommodate the component thickness
W	Overall width of the carrier tape
P1	Pitch between successive cavity centers

QUADRANT ASSIGNMENTS FOR PIN 1 ORIENTATION IN TAPE

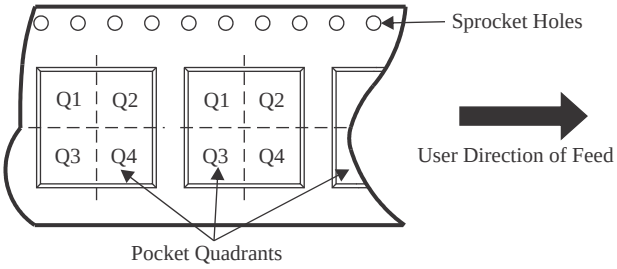

*All dimensions are nominal

Device	Package Type	Package Drawing	Pins	SPQ	Reel Diameter (mm)	Reel Width W1 (mm)	A0 (mm)	B0 (mm)	K0 (mm)	P1 (mm)	W (mm)	Pin1 Quadrant
CD74HC4051M96	SOIC	D	16	2500	330.0	16.4	6.5	10.3	2.1	8.0	16.0	Q1
CD74HC4051M96	SOIC	D	16	2500	330.0	16.4	6.5	10.3	2.1	8.0	16.0	Q1
CD74HC4051NSR	SO	NS	16	2000	330.0	16.4	8.2	10.5	2.5	12.0	16.0	Q1
CD74HC4051NSR	SO	NS	16	2000	330.0	16.4	8.2	10.5	2.5	12.0	16.0	Q1
CD74HC4051PWR	TSSOP	PW	16	2000	330.0	12.4	6.9	5.6	1.6	8.0	12.0	Q1
CD74HC4051PWR	TSSOP	PW	16	2000	330.0	12.4	6.9	5.6	1.6	8.0	12.0	Q1
CD74HC4052M96	SOIC	D	16	2500	330.0	16.4	6.5	10.3	2.1	8.0	16.0	Q1
CD74HC4052M96	SOIC	D	16	2500	330.0	16.4	6.5	10.3	2.1	8.0	16.0	Q1
CD74HC4052NSR	SO	NS	16	2000	330.0	16.4	8.2	10.5	2.5	12.0	16.0	Q1
CD74HC4052NSR	SO	NS	16	2000	330.0	16.4	8.2	10.5	2.5	12.0	16.0	Q1
CD74HC4052PWR	TSSOP	PW	16	2000	330.0	12.4	6.9	5.6	1.6	8.0	12.0	Q1
CD74HC4052PWR	TSSOP	PW	16	2000	330.0	12.4	6.9	5.6	1.6	8.0	12.0	Q1
CD74HC4053M96	SOIC	D	16	2500	330.0	16.4	6.5	10.3	2.1	8.0	16.0	Q1
CD74HC4053M96	SOIC	D	16	2500	330.0	16.4	6.5	10.3	2.1	8.0	16.0	Q1
CD74HC4053NSR	SO	NS	16	2000	330.0	16.4	8.2	10.5	2.5	12.0	16.0	Q1
CD74HC4053PWR	TSSOP	PW	16	2000	330.0	12.4	6.9	5.6	1.6	8.0	12.0	Q1

Device	Package Type	Package Drawing	Pins	SPQ	Reel Diameter (mm)	Reel Width W1 (mm)	A0 (mm)	B0 (mm)	K0 (mm)	P1 (mm)	W (mm)	Pin1 Quadrant
CD74HC4053PWR	TSSOP	PW	16	2000	330.0	12.4	6.9	5.6	1.6	8.0	12.0	Q1
CD74HCT4051M96	SOIC	D	16	2500	330.0	16.4	6.5	10.3	2.1	8.0	16.0	Q1
CD74HCT4051M96	SOIC	D	16	2500	330.0	16.4	6.5	10.3	2.1	8.0	16.0	Q1
CD74HCT4052M96	SOIC	D	16	2500	330.0	16.4	6.5	10.3	2.1	8.0	16.0	Q1
CD74HCT4052M96	SOIC	D	16	2500	330.0	16.4	6.5	10.3	2.1	8.0	16.0	Q1
CD74HCT4053M96	SOIC	D	16	2500	330.0	16.4	6.5	10.3	2.1	8.0	16.0	Q1
CD74HCT4053M96	SOIC	D	16	2500	330.0	16.4	6.5	10.3	2.1	8.0	16.0	Q1
CD74HCT4053PWR	TSSOP	PW	16	2000	330.0	12.4	6.9	5.6	1.6	8.0	12.0	Q1
CD74HCT4053PWR	TSSOP	PW	16	2000	330.0	12.4	6.9	5.6	1.6	8.0	12.0	Q1

TAPE AND REEL BOX DIMENSIONS

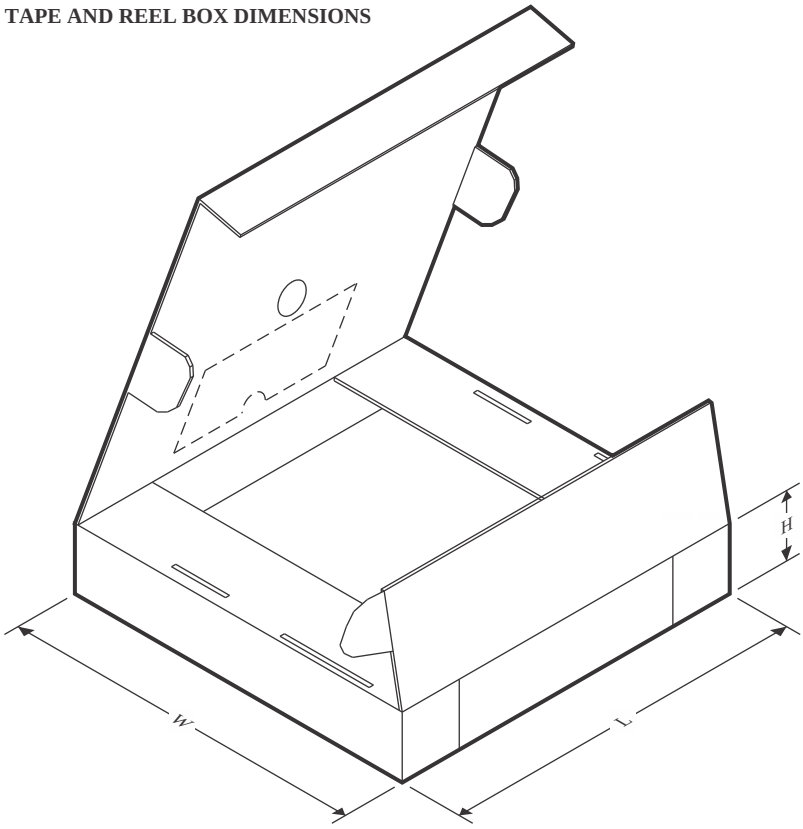

*All dimensions are nominal

Device	Package Type	Package Drawing	Pins	SPQ	Length (mm)	Width (mm)	Height (mm)
CD74HC4051M96	SOIC	D	16	2500	340.5	336.1	32.0
CD74HC4051M96	SOIC	D	16	2500	353.0	353.0	32.0
CD74HC4051NSR	SO	NS	16	2000	353.0	353.0	32.0
CD74HC4051NSR	SO	NS	16	2000	367.0	367.0	38.0
CD74HC4051PWR	TSSOP	PW	16	2000	353.0	353.0	32.0
CD74HC4051PWR	TSSOP	PW	16	2000	356.0	356.0	35.0
CD74HC4052M96	SOIC	D	16	2500	340.5	336.1	32.0
CD74HC4052M96	SOIC	D	16	2500	353.0	353.0	32.0
CD74HC4052NSR	SO	NS	16	2000	353.0	353.0	32.0
CD74HC4052NSR	SO	NS	16	2000	356.0	356.0	35.0
CD74HC4052PWR	TSSOP	PW	16	2000	353.0	353.0	32.0
CD74HC4052PWR	TSSOP	PW	16	2000	356.0	356.0	35.0
CD74HC4053M96	SOIC	D	16	2500	353.0	353.0	32.0
CD74HC4053M96	SOIC	D	16	2500	340.5	336.1	32.0
CD74HC4053NSR	SO	NS	16	2000	356.0	356.0	35.0
CD74HC4053PWR	TSSOP	PW	16	2000	353.0	353.0	32.0
CD74HC4053PWR	TSSOP	PW	16	2000	356.0	356.0	35.0
CD74HCT4051M96	SOIC	D	16	2500	353.0	353.0	32.0

Device	Package Type	Package Drawing	Pins	SPQ	Length (mm)	Width (mm)	Height (mm)
CD74HCT4051M96	SOIC	D	16	2500	340.5	336.1	32.0
CD74HCT4052M96	SOIC	D	16	2500	353.0	353.0	32.0
CD74HCT4052M96	SOIC	D	16	2500	340.5	336.1	32.0
CD74HCT4053M96	SOIC	D	16	2500	340.5	336.1	32.0
CD74HCT4053M96	SOIC	D	16	2500	353.0	353.0	32.0
CD74HCT4053PWR	TSSOP	PW	16	2000	353.0	353.0	32.0
CD74HCT4053PWR	TSSOP	PW	16	2000	356.0	356.0	35.0

TUBE

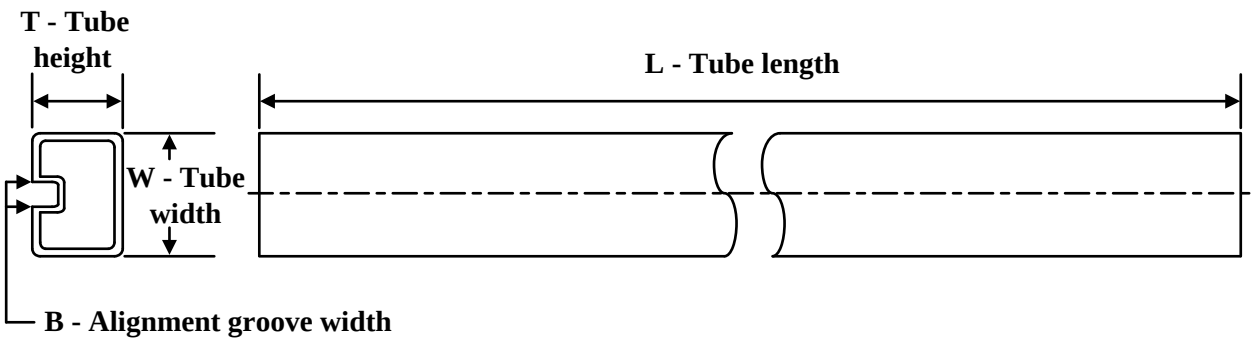

*All dimensions are nominal

Device	Package Name	Package Type	Pins	SPQ	L (mm)	W (mm)	T (µm)	B (mm)
CD74HC4051E	N	PDIP	16	25	506	13.97	11230	4.32
CD74HC4051EE4	N	PDIP	16	25	506	13.97	11230	4.32
CD74HC4052E	N	PDIP	16	25	506	13.97	11230	4.32
CD74HC4052E	N	PDIP	16	25	506	13.97	11230	4.32
CD74HC4053E	N	PDIP	16	25	506	13.97	11230	4.32
CD74HC4053E	N	PDIP	16	25	506	13.97	11230	4.32
CD74HCT4051E	N	PDIP	16	25	506	13.97	11230	4.32
CD74HCT4051E	N	PDIP	16	25	506	13.97	11230	4.32
CD74HCT4052E	N	PDIP	16	25	506	13.97	11230	4.32
CD74HCT4052E	N	PDIP	16	25	506	13.97	11230	4.32
CD74HCT4052EE4	N	PDIP	16	25	506	13.97	11230	4.32
CD74HCT4052EE4	N	PDIP	16	25	506	13.97	11230	4.32
CD74HCT4053E	N	PDIP	16	25	506	13.97	11230	4.32
CD74HCT4053E	N	PDIP	16	25	506	13.97	11230	4.32