TAPE AND REEL INFORMATION

REEL DIMENSIONS

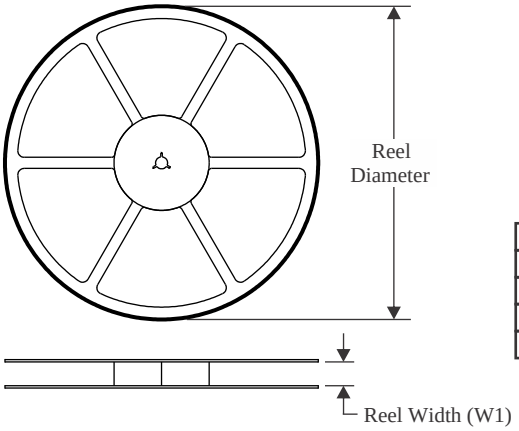

TAPE DIMENSIONS

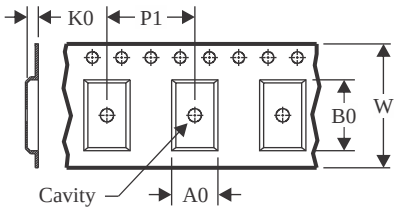

A0	Dimension designed to accommodate the component width
B0	Dimension designed to accommodate the component length
K0	Dimension designed to accommodate the component thickness
W	Overall width of the carrier tape
P1	Pitch between successive cavity centers

QUADRANT ASSIGNMENTS FOR PIN 1 ORIENTATION IN TAPE

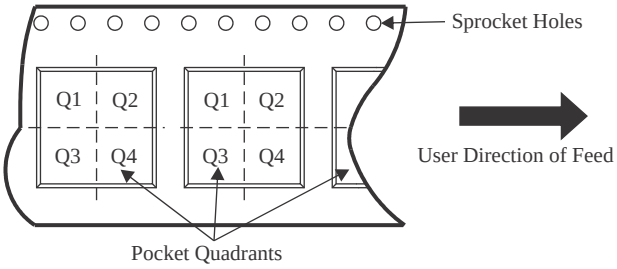

*All dimensions are nominal

Device	Package Type	Package Drawing	Pins	SPQ	Reel Diameter (mm)	Reel Width W1 (mm)	A0 (mm)	B0 (mm)	K0 (mm)	P1 (mm)	W (mm)	Pin1 Quadrant
DS125BR401ANJYR	WQFN	NJY	54	2000	330.0	16.4	5.8	10.3	1.0	12.0	16.0	Q1
DS125BR401ANJYT	WQFN	NJY	54	250	178.0	16.4	5.8	10.3	1.0	12.0	16.0	Q1

TAPE AND REEL BOX DIMENSIONS

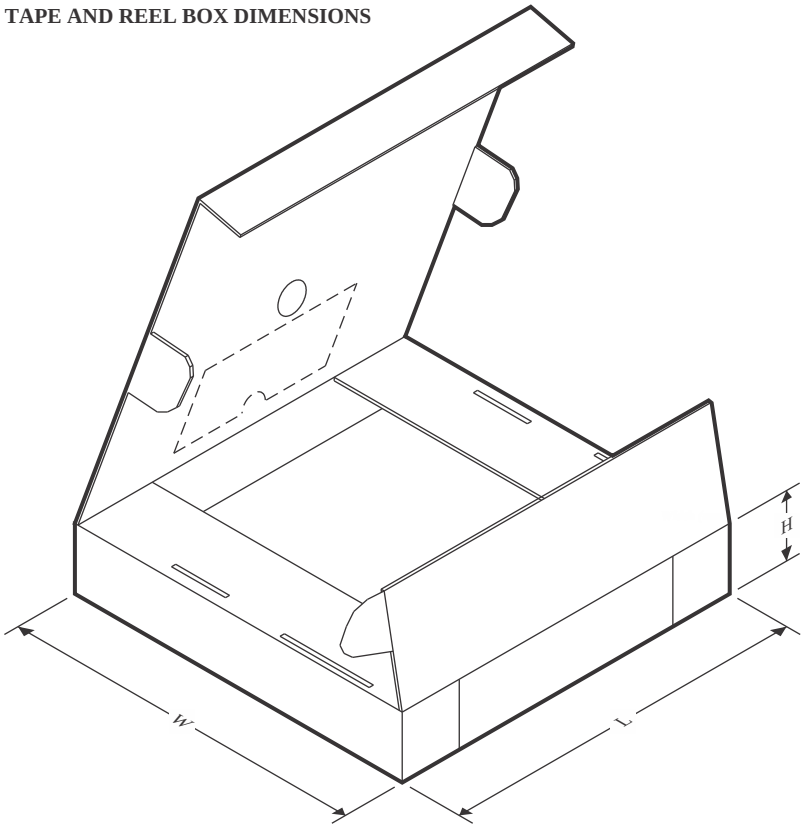

*All dimensions are nominal

Device	Package Type	Package Drawing	Pins	SPQ	Length (mm)	Width (mm)	Height (mm)
DS125BR401ANJYR	WQFN	NJY	54	2000	356.0	356.0	36.0
DS125BR401ANJYT	WQFN	NJY	54	250	208.0	191.0	35.0