TAPE AND REEL INFORMATION

REEL DIMENSIONS

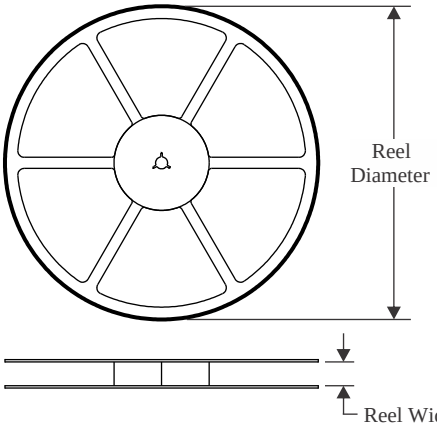

TAPE DIMENSIONS

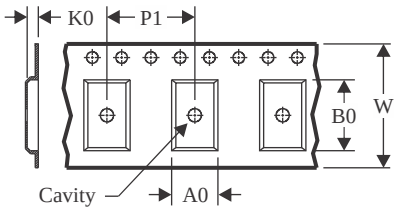

A0	Dimension designed to accommodate the component width
B0	Dimension designed to accommodate the component length
K0	Dimension designed to accommodate the component thickness
W	Overall width of the carrier tape
P1	Pitch between successive cavity centers

QUADRANT ASSIGNMENTS FOR PIN 1 ORIENTATION IN TAPE

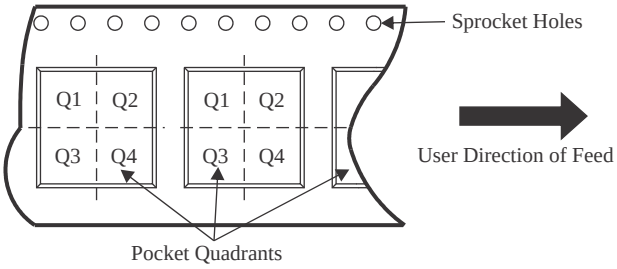

*All dimensions are nominal

Device	Package Type	Package Drawing	Pins	SPQ	Reel Diameter (mm)	Reel Width W1 (mm)	A0 (mm)	B0 (mm)	K0 (mm)	P1 (mm)	W (mm)	Pin1 Quadrant
DS92LV0421SQ/NOPB	WQFN	NJK	36	1000	330.0	16.4	6.3	6.3	1.5	12.0	16.0	Q1
DS92LV0421SQE/NOPB	WQFN	NJK	36	250	178.0	16.4	6.3	6.3	1.5	12.0	16.0	Q1
DS92LV0421SQX/NOPB	WQFN	NJK	36	2500	330.0	16.4	6.3	6.3	1.5	12.0	16.0	Q1
DS92LV0422SQ/NOPB	WQFN	RHS	48	1000	330.0	16.4	7.3	7.3	1.3	12.0	16.0	Q1
DS92LV0422SQE/NOPB	WQFN	RHS	48	250	178.0	16.4	7.3	7.3	1.3	12.0	16.0	Q1
DS92LV0422SQX/NOPB	WQFN	RHS	48	2500	330.0	16.4	7.3	7.3	1.3	12.0	16.0	Q1

TAPE AND REEL BOX DIMENSIONS

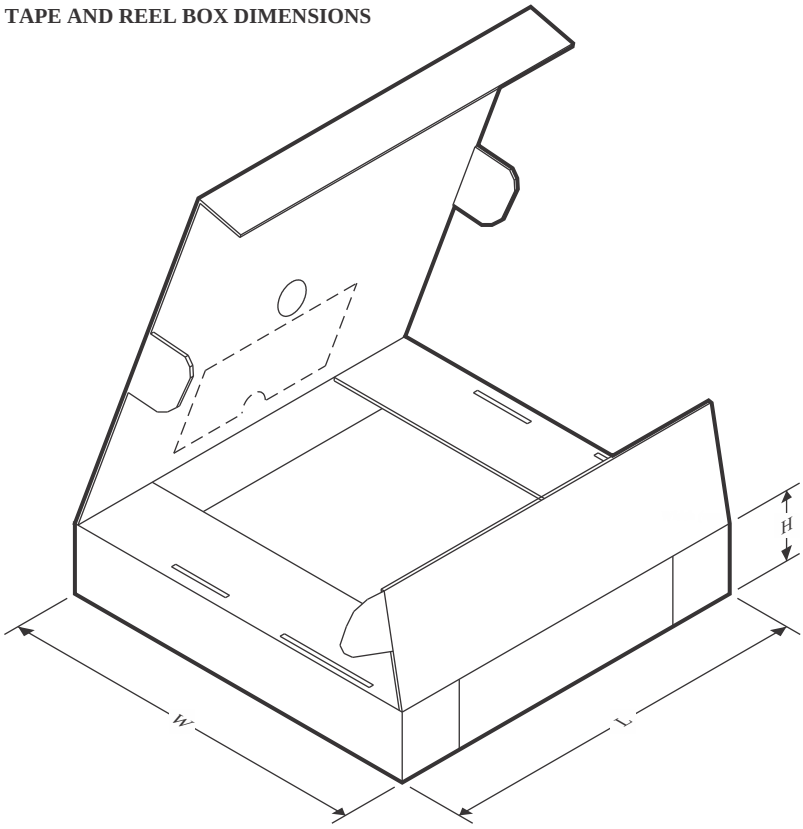

*All dimensions are nominal

Device	Package Type	Package Drawing	Pins	SPQ	Length (mm)	Width (mm)	Height (mm)
DS92LV0421SQ/NOPB	WQFN	NJK	36	1000	356.0	356.0	36.0
DS92LV0421SQE/NOPB	WQFN	NJK	36	250	208.0	191.0	35.0
DS92LV0421SQX/NOPB	WQFN	NJK	36	2500	356.0	356.0	36.0
DS92LV0422SQ/NOPB	WQFN	RHS	48	1000	356.0	356.0	36.0
DS92LV0422SQE/NOPB	WQFN	RHS	48	250	208.0	191.0	35.0
DS92LV0422SQX/NOPB	WQFN	RHS	48	2500	356.0	356.0	36.0