TAPE AND REEL INFORMATION

REEL DIMENSIONS

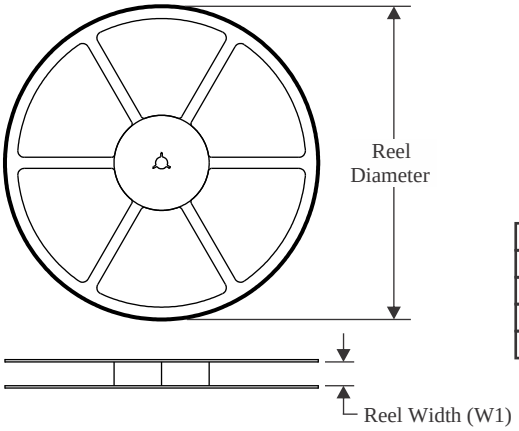

TAPE DIMENSIONS

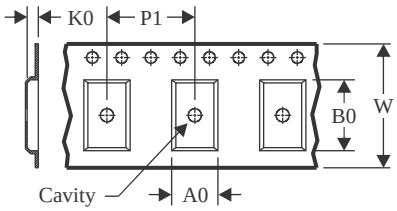

A0	Dimension designed to accommodate the component width
B0	Dimension designed to accommodate the component length
K0	Dimension designed to accommodate the component thickness
W	Overall width of the carrier tape
P1	Pitch between successive cavity centers

QUADRANT ASSIGNMENTS FOR PIN 1 ORIENTATION IN TAPE

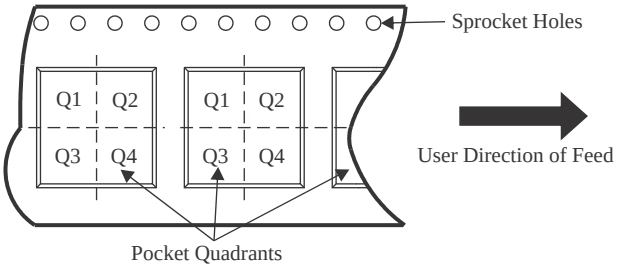

*All dimensions are nominal

Device	Package Type	Package Drawing	Pins	SPQ	Reel Diameter (mm)	Reel Width W1 (mm)	A0 (mm)	B0 (mm)	K0 (mm)	P1 (mm)	W (mm)	Pin1 Quadrant
SN74AHC540DBR	SSOP	DB	20	2000	330.0	16.4	8.2	7.5	2.5	12.0	16.0	Q1
SN74AHC540DGVR	TVSOP	DGV	20	2000	330.0	12.4	6.9	5.6	1.6	8.0	12.0	Q1
SN74AHC540DWR	SOIC	DW	20	2000	330.0	24.4	10.8	13.3	2.7	12.0	24.0	Q1
SN74AHC540PWR	TSSOP	PW	20	2000	330.0	16.4	6.95	7.1	1.6	8.0	16.0	Q1

TAPE AND REEL BOX DIMENSIONS

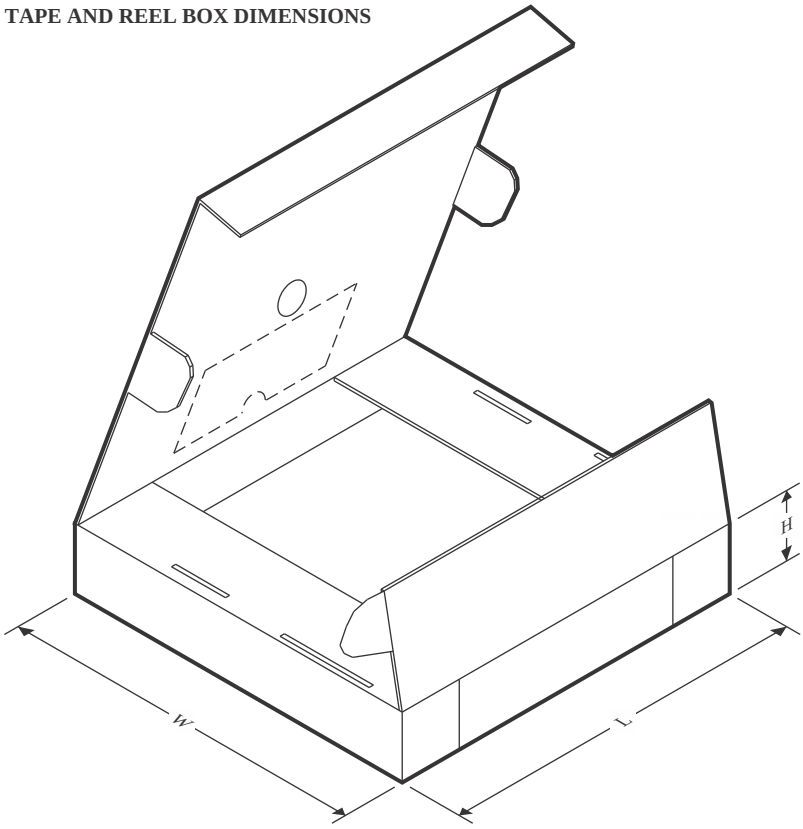

*All dimensions are nominal

Device	Package Type	Package Drawing	Pins	SPQ	Length (mm)	Width (mm)	Height (mm)
SN74AHC540DBR	SSOP	DB	20	2000	356.0	356.0	35.0
SN74AHC540DGVR	TVSOP	DGV	20	2000	356.0	356.0	35.0
SN74AHC540DWR	SOIC	DW	20	2000	367.0	367.0	45.0
SN74AHC540PWR	TSSOP	PW	20	2000	356.0	356.0	35.0

TUBE

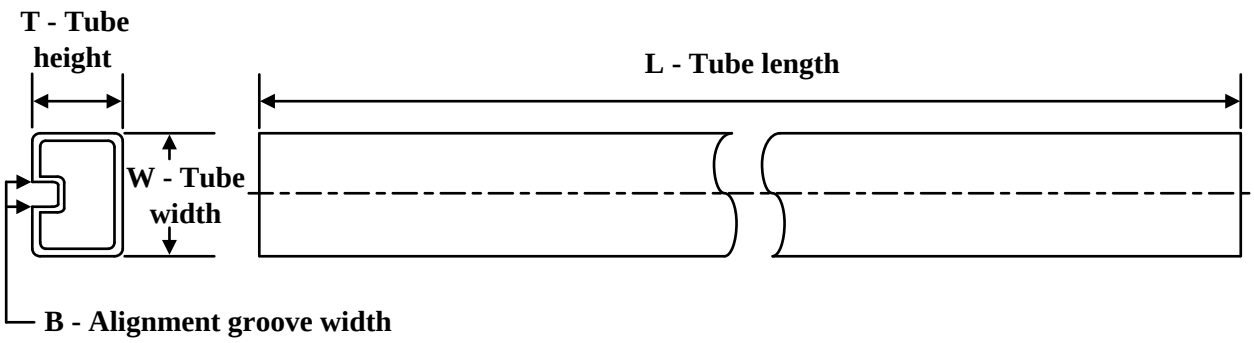

*All dimensions are nominal

Device	Package Name	Package Type	Pins	SPQ	L (mm)	W (mm)	T (µm)	B (mm)
5962-9685001Q2A	FK	LCCC	20	55	506.98	12.06	2030	NA
5962-9685001QSA	W	CFP	20	25	506.98	26.16	6220	NA
SN74AHC540N	N	PDIP	20	20	506	13.97	11230	4.32
SNJ54AHC540FK	FK	LCCC	20	55	506.98	12.06	2030	NA
SNJ54AHC540W	W	CFP	20	25	506.98	26.16	6220	NA