TAPE AND REEL INFORMATION

REEL DIMENSIONS

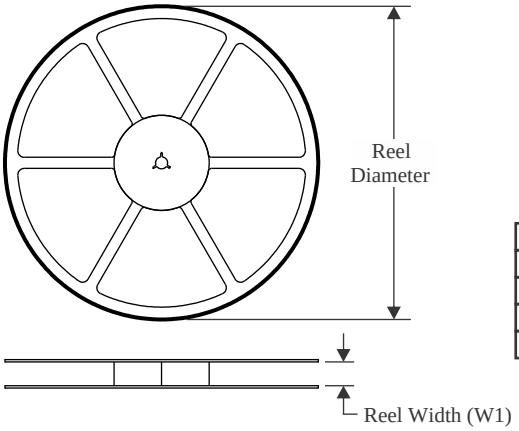

TAPE DIMENSIONS

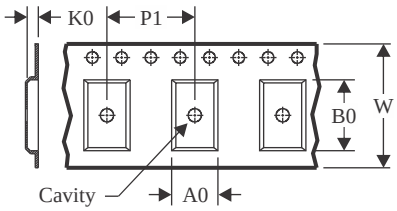

A0	Dimension designed to accommodate the component width
B0	Dimension designed to accommodate the component length
K0	Dimension designed to accommodate the component thickness
W	Overall width of the carrier tape
P1	Pitch between successive cavity centers

QUADRANT ASSIGNMENTS FOR PIN 1 ORIENTATION IN TAPE

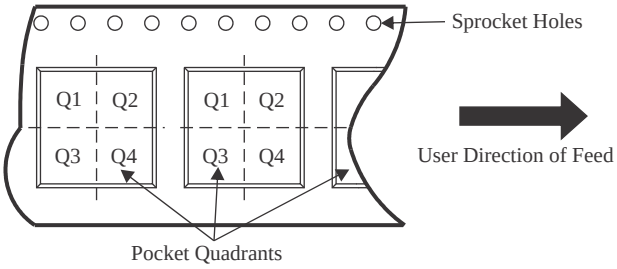

*All dimensions are nominal

Device	Package Type	Package Drawing	Pins	SPQ	Reel Diameter (mm)	Reel Width W1 (mm)	A0 (mm)	B0 (mm)	K0 (mm)	P1 (mm)	W (mm)	Pin1 Quadrant
SN74LVC1G17QDBVRQ1	SOT-23	DBV	5	3000	178.0	9.0	3.3	3.2	1.4	4.0	8.0	Q3
SN74LVC1G17QDBVRQ1	SOT-23	DBV	5	3000	179.0	8.4	3.2	3.2	1.4	4.0	8.0	Q3
SN74LVC1G17QDCKRQ1	SC70	DCK	5	3000	178.0	9.0	2.4	2.5	1.2	4.0	8.0	Q3
SN74LVC1G17QDRYRQ1	SON	DRY	6	5000	180.0	9.5	1.2	1.65	0.7	4.0	8.0	Q1

TAPE AND REEL BOX DIMENSIONS

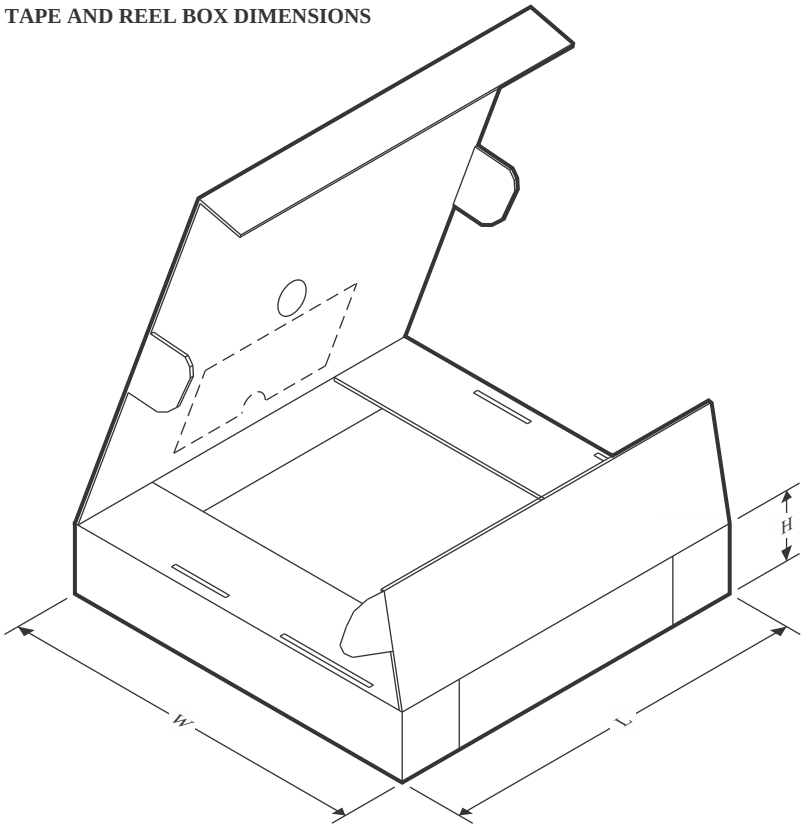

*All dimensions are nominal

Device	Package Type	Package Drawing	Pins	SPQ	Length (mm)	Width (mm)	Height (mm)
SN74LVC1G17QDBVRQ1	SOT-23	DBV	5	3000	180.0	180.0	18.0
SN74LVC1G17QDBVRQ1	SOT-23	DBV	5	3000	200.0	183.0	25.0
SN74LVC1G17QDCKRQ1	SC70	DCK	5	3000	190.0	190.0	30.0
SN74LVC1G17QDRYRQ1	SON	DRY	6	5000	189.0	185.0	36.0