TAPE AND REEL INFORMATION

REEL DIMENSIONS

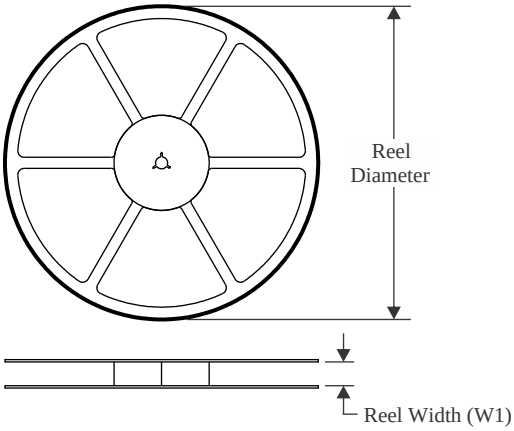

TAPE DIMENSIONS

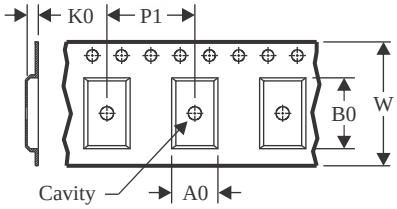

A0	Dimension designed to accommodate the component width
B0	Dimension designed to accommodate the component length
K0	Dimension designed to accommodate the component thickness
W	Overall width of the carrier tape
P1	Pitch between successive cavity centers

QUADRANT ASSIGNMENTS FOR PIN 1 ORIENTATION IN TAPE

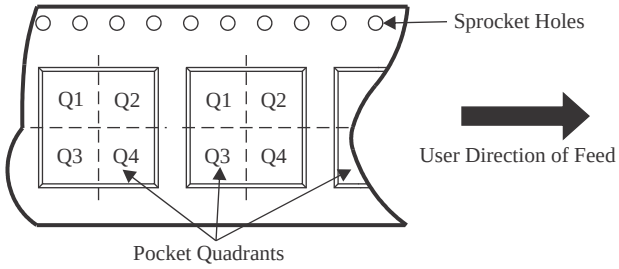

*All dimensions are nominal

Device	Package Type	Package Drawing	Pins	SPQ	Reel Diameter (mm)	Reel Width W1 (mm)	A0 (mm)	B0 (mm)	K0 (mm)	P1 (mm)	W (mm)	Pin1 Quadrant
74LVC1G332DBVRG4	SOT-23	DBV	6	3000	178.0	9.0	3.23	3.17	1.37	4.0	8.0	Q3
SN74LVC1G332DBVR	SOT-23	DBV	6	3000	180.0	8.4	3.23	3.17	1.37	4.0	8.0	Q3
SN74LVC1G332DBVR	SOT-23	DBV	6	3000	178.0	9.0	3.23	3.17	1.37	4.0	8.0	Q3
SN74LVC1G332DBVR	SOT-23	DBV	6	3000	180.0	8.4	3.2	3.2	1.4	4.0	8.0	Q3
SN74LVC1G332DCKR	SC70	DCK	6	3000	178.0	9.0	2.4	2.5	1.2	4.0	8.0	Q3
SN74LVC1G332DCKR	SC70	DCK	6	3000	178.0	9.0	2.4	2.5	1.2	4.0	8.0	Q3
SN74LVC1G332DCKR	SC70	DCK	6	3000	180.0	8.4	2.41	2.41	1.2	4.0	8.0	Q3
SN74LVC1G332DCKR	SC70	DCK	6	3000	180.0	8.4	2.3	2.55	1.2	4.0	8.0	Q3
SN74LVC1G332DCKR	SC70	DCK	6	3000	178.0	8.4	2.25	2.45	1.2	4.0	8.0	Q3
SN74LVC1G332DCKRG4	SC70	DCK	6	3000	178.0	9.0	2.4	2.5	1.2	4.0	8.0	Q3
SN74LVC1G332DRLR	SOT-5X3	DRL	6	4000	180.0	8.4	1.98	1.78	0.69	4.0	8.0	Q3
SN74LVC1G332DRLR	SOT-5X3	DRL	6	4000	180.0	8.4	2.0	1.8	0.75	4.0	8.0	Q3
SN74LVC1G332DRLRG4	SOT-5X3	DRL	6	4000	180.0	8.4	2.0	1.8	0.75	4.0	8.0	Q3
SN74LVC1G332DRY2	SON	DRY	6	5000	180.0	9.5	1.6	1.15	0.75	4.0	8.0	Q3
SN74LVC1G332DRY2	SON	DRY	6	5000	180.0	8.4	1.65	1.2	0.7	4.0	8.0	Q3
SN74LVC1G332DRYR	SON	DRY	6	5000	180.0	9.5	1.15	1.6	0.75	4.0	8.0	Q1

Device	Package Type	Package Drawing	Pins	SPQ	Reel Diameter (mm)	Reel Width W1 (mm)	A0 (mm)	B0 (mm)	K0 (mm)	P1 (mm)	W (mm)	Pin1 Quadrant
SN74LVC1G332DRYRG4	SON	DRY	6	5000	180.0	9.5	1.15	1.6	0.75	4.0	8.0	Q1
SN74LVC1G332DSF2	SON	DSF	6	5000	180.0	8.4	1.16	1.16	0.63	4.0	8.0	Q3
SN74LVC1G332DSF2	SON	DSF	6	5000	180.0	9.5	1.16	1.16	0.5	4.0	8.0	Q3
SN74LVC1G332DSFR	SON	DSF	6	5000	180.0	9.5	1.16	1.16	0.5	4.0	8.0	Q2
SN74LVC1G332DSFRG4	SON	DSF	6	5000	180.0	9.5	1.16	1.16	0.5	4.0	8.0	Q2
SN74LVC1G332YZPR	DSBGA	YZP	6	3000	178.0	9.2	1.02	1.52	0.63	4.0	8.0	Q1

TAPE AND REEL BOX DIMENSIONS

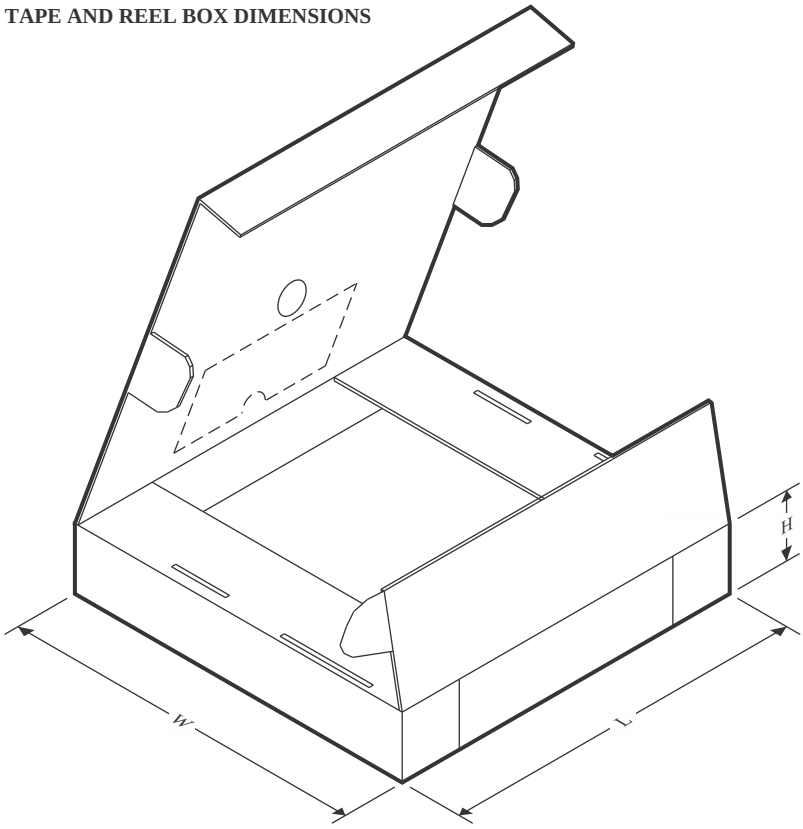

*All dimensions are nominal

Device	Package Type	Package Drawing	Pins	SPQ	Length (mm)	Width (mm)	Height (mm)
74LVC1G332DBVRG4	SOT-23	DBV	6	3000	180.0	180.0	18.0
SN74LVC1G332DBVR	SOT-23	DBV	6	3000	202.0	201.0	28.0
SN74LVC1G332DBVR	SOT-23	DBV	6	3000	180.0	180.0	18.0
SN74LVC1G332DBVR	SOT-23	DBV	6	3000	210.0	185.0	35.0
SN74LVC1G332DCKR	SC70	DCK	6	3000	180.0	180.0	18.0
SN74LVC1G332DCKR	SC70	DCK	6	3000	180.0	180.0	18.0
SN74LVC1G332DCKR	SC70	DCK	6	3000	202.0	201.0	28.0
SN74LVC1G332DCKR	SC70	DCK	6	3000	210.0	185.0	35.0
SN74LVC1G332DCKR	SC70	DCK	6	3000	208.0	191.0	35.0
SN74LVC1G332DCKRG4	SC70	DCK	6	3000	180.0	180.0	18.0
SN74LVC1G332DRLR	SOT-5X3	DRL	6	4000	202.0	201.0	28.0
SN74LVC1G332DRLR	SOT-5X3	DRL	6	4000	210.0	185.0	35.0
SN74LVC1G332DRLRG4	SOT-5X3	DRL	6	4000	210.0	185.0	35.0
SN74LVC1G332DRY2	SON	DRY	6	5000	184.0	184.0	19.0
SN74LVC1G332DRY2	SON	DRY	6	5000	202.0	201.0	28.0
SN74LVC1G332DRYR	SON	DRY	6	5000	184.0	184.0	19.0
SN74LVC1G332DRYRG4	SON	DRY	6	5000	184.0	184.0	19.0
SN74LVC1G332DSF2	SON	DSF	6	5000	202.0	201.0	28.0

Device	Package Type	Package Drawing	Pins	SPQ	Length (mm)	Width (mm)	Height (mm)
SN74LVC1G332DSF2	SON	DSF	6	5000	184.0	184.0	19.0
SN74LVC1G332DSFR	SON	DSF	6	5000	184.0	184.0	19.0
SN74LVC1G332DSFRG4	SON	DSF	6	5000	184.0	184.0	19.0
SN74LVC1G332YZPR	DSBGA	YZP	6	3000	220.0	220.0	35.0