TAPE AND REEL INFORMATION

REEL DIMENSIONS

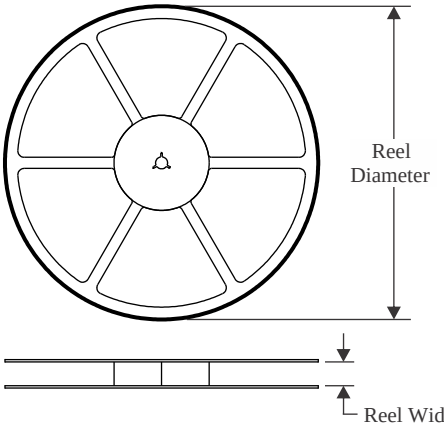

TAPE DIMENSIONS

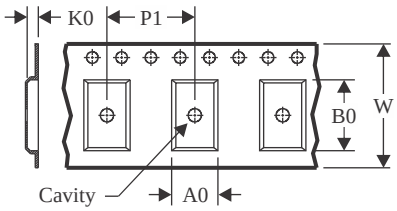

A0	Dimension designed to accommodate the component width
B0	Dimension designed to accommodate the component length
K0	Dimension designed to accommodate the component thickness
W	Overall width of the carrier tape
P1	Pitch between successive cavity centers

QUADRANT ASSIGNMENTS FOR PIN 1 ORIENTATION IN TAPE

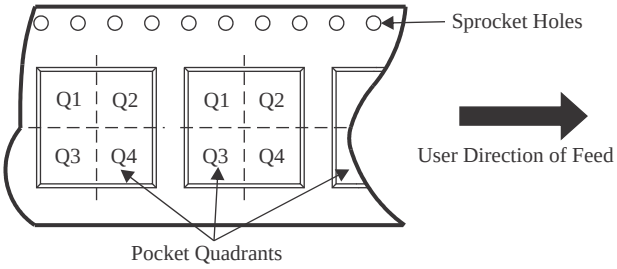

*All dimensions are nominal

Device	Package Type	Package Drawing	Pins	SPQ	Reel Diameter (mm)	Reel Width W1 (mm)	A0 (mm)	B0 (mm)	K0 (mm)	P1 (mm)	W (mm)	Pin1 Quadrant
TCAN1046AVDMTRQ1	VSON	DMT	14	3000	330.0	12.4	3.3	4.8	1.2	8.0	12.0	Q1
TCAN1046AVDRQ1	SOIC	D	14	2500	330.0	16.4	6.5	9.0	2.1	8.0	16.0	Q1
TCAN1046AVDYYRQ1	SOT-23-THIN	DYY	14	3000	330.0	12.4	4.8	3.6	1.6	8.0	12.0	Q3
TCAN1048AVDMTRQ1	VSON	DMT	14	3000	330.0	12.4	3.3	4.8	1.2	8.0	12.0	Q1
TCAN1048AVDRQ1	SOIC	D	14	2500	330.0	16.4	6.5	9.0	2.1	8.0	16.0	Q1

TAPE AND REEL BOX DIMENSIONS

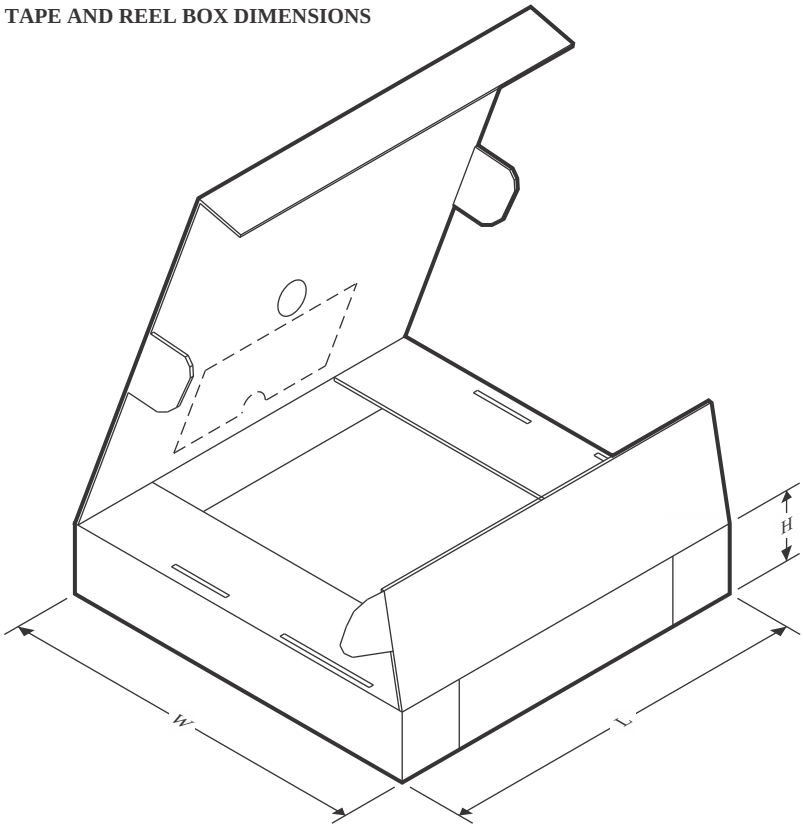

*All dimensions are nominal

Device	Package Type	Package Drawing	Pins	SPQ	Length (mm)	Width (mm)	Height (mm)
TCAN1046AVDMTRQ1	VSON	DMT	14	3000	367.0	367.0	35.0
TCAN1046AVDRQ1	SOIC	D	14	2500	356.0	356.0	35.0
TCAN1046AVDYYRQ1	SOT-23-THIN	DYY	14	3000	336.6	336.6	31.8
TCAN1048AVDMTRQ1	VSON	DMT	14	3000	367.0	367.0	35.0
TCAN1048AVDRQ1	SOIC	D	14	2500	356.0	356.0	35.0