TAPE AND REEL INFORMATION

REEL DIMENSIONS

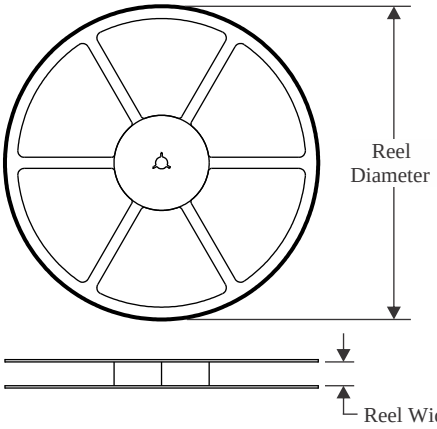

TAPE DIMENSIONS

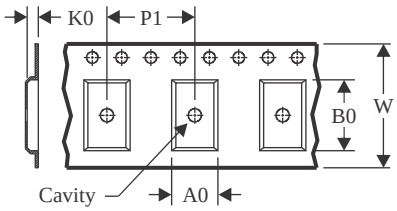

A0	Dimension designed to accommodate the component width
B0	Dimension designed to accommodate the component length
K0	Dimension designed to accommodate the component thickness
W	Overall width of the carrier tape
P1	Pitch between successive cavity centers

QUADRANT ASSIGNMENTS FOR PIN 1 ORIENTATION IN TAPE

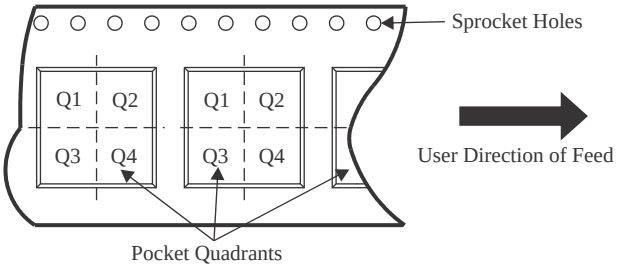

*All dimensions are nominal

Device	Package Type	Package Drawing	Pins	SPQ	Reel Diameter (mm)	Reel Width W1 (mm)	A0 (mm)	B0 (mm)	K0 (mm)	P1 (mm)	W (mm)	Pin1 Quadrant
TCAN330DCNR	SOT-23	DCN	8	3000	180.0	8.4	3.23	3.17	1.37	4.0	8.0	Q3
TCAN330DCNT	SOT-23	DCN	8	250	180.0	8.4	3.23	3.17	1.37	4.0	8.0	Q3
TCAN330DR	SOIC	D	8	2500	330.0	12.4	6.4	5.2	2.1	8.0	12.0	Q1
TCAN330GDCNR	SOT-23	DCN	8	3000	180.0	8.4	3.23	3.17	1.37	4.0	8.0	Q3
TCAN330GDCNT	SOT-23	DCN	8	250	180.0	8.4	3.23	3.17	1.37	4.0	8.0	Q3
TCAN330GDR	SOIC	D	8	2500	330.0	12.4	6.4	5.2	2.1	8.0	12.0	Q1
TCAN332DCNR	SOT-23	DCN	8	3000	180.0	8.4	3.23	3.17	1.37	4.0	8.0	Q3
TCAN332DCNT	SOT-23	DCN	8	250	180.0	8.4	3.23	3.17	1.37	4.0	8.0	Q3
TCAN332DR	SOIC	D	8	2500	330.0	12.4	6.4	5.2	2.1	8.0	12.0	Q1
TCAN332GDCNR	SOT-23	DCN	8	3000	180.0	8.4	3.23	3.17	1.37	4.0	8.0	Q3
TCAN332GDCNT	SOT-23	DCN	8	250	180.0	8.4	3.23	3.17	1.37	4.0	8.0	Q3
TCAN332GDR	SOIC	D	8	2500	330.0	12.4	6.4	5.2	2.1	8.0	12.0	Q1
TCAN334DCNR	SOT-23	DCN	8	3000	180.0	8.4	3.23	3.17	1.37	4.0	8.0	Q3
TCAN334DCNT	SOT-23	DCN	8	250	180.0	8.4	3.23	3.17	1.37	4.0	8.0	Q3
TCAN334DR	SOIC	D	8	2500	330.0	12.4	6.4	5.2	2.1	8.0	12.0	Q1
TCAN334GDCNR	SOT-23	DCN	8	3000	180.0	8.4	3.23	3.17	1.37	4.0	8.0	Q3

Device	Package Type	Package Drawing	Pins	SPQ	Reel Diameter (mm)	Reel Width W1 (mm)	A0 (mm)	B0 (mm)	K0 (mm)	P1 (mm)	W (mm)	Pin1 Quadrant
TCAN334GDCNT	SOT-23	DCN	8	250	180.0	8.4	3.23	3.17	1.37	4.0	8.0	Q3
TCAN334GDR	SOIC	D	8	2500	330.0	12.4	6.4	5.2	2.1	8.0	12.0	Q1
TCAN337DCNR	SOT-23	DCN	8	3000	180.0	8.4	3.23	3.17	1.37	4.0	8.0	Q3
TCAN337DCNT	SOT-23	DCN	8	250	180.0	8.4	3.23	3.17	1.37	4.0	8.0	Q3
TCAN337DR	SOIC	D	8	2500	330.0	12.4	6.4	5.2	2.1	8.0	12.0	Q1
TCAN337GDCNR	SOT-23	DCN	8	3000	180.0	8.4	3.23	3.17	1.37	4.0	8.0	Q3
TCAN337GDCNT	SOT-23	DCN	8	250	180.0	8.4	3.23	3.17	1.37	4.0	8.0	Q3
TCAN337GDR	SOIC	D	8	2500	330.0	12.4	6.4	5.2	2.1	8.0	12.0	Q1

TAPE AND REEL BOX DIMENSIONS

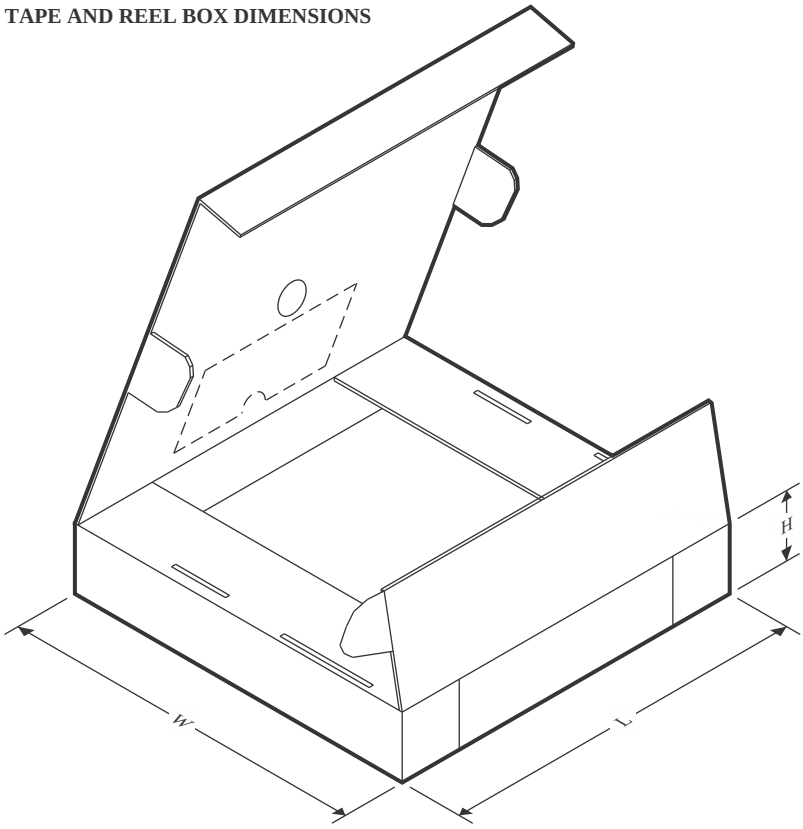

*All dimensions are nominal

Device	Package Type	Package Drawing	Pins	SPQ	Length (mm)	Width (mm)	Height (mm)
TCAN330DCNR	SOT-23	DCN	8	3000	202.0	201.0	28.0
TCAN330DCNT	SOT-23	DCN	8	250	202.0	201.0	28.0
TCAN330DR	SOIC	D	8	2500	353.0	353.0	32.0
TCAN330GDCNR	SOT-23	DCN	8	3000	202.0	201.0	28.0
TCAN330GDCNT	SOT-23	DCN	8	250	202.0	201.0	28.0
TCAN330GDR	SOIC	D	8	2500	353.0	353.0	32.0
TCAN332DCNR	SOT-23	DCN	8	3000	202.0	201.0	28.0
TCAN332DCNT	SOT-23	DCN	8	250	202.0	201.0	28.0
TCAN332DR	SOIC	D	8	2500	353.0	353.0	32.0
TCAN332GDCNR	SOT-23	DCN	8	3000	202.0	201.0	28.0
TCAN332GDCNT	SOT-23	DCN	8	250	202.0	201.0	28.0
TCAN332GDR	SOIC	D	8	2500	353.0	353.0	32.0
TCAN334DCNR	SOT-23	DCN	8	3000	202.0	201.0	28.0
TCAN334DCNT	SOT-23	DCN	8	250	202.0	201.0	28.0
TCAN334DR	SOIC	D	8	2500	353.0	353.0	32.0
TCAN334GDCNR	SOT-23	DCN	8	3000	202.0	201.0	28.0
TCAN334GDCNT	SOT-23	DCN	8	250	202.0	201.0	28.0
TCAN334GDR	SOIC	D	8	2500	353.0	353.0	32.0

Device	Package Type	Package Drawing	Pins	SPQ	Length (mm)	Width (mm)	Height (mm)
TCAN337DCNR	SOT-23	DCN	8	3000	202.0	201.0	28.0
TCAN337DCNT	SOT-23	DCN	8	250	202.0	201.0	28.0
TCAN337DR	SOIC	D	8	2500	340.5	336.1	25.0
TCAN337GDCNR	SOT-23	DCN	8	3000	202.0	201.0	28.0
TCAN337GDCNT	SOT-23	DCN	8	250	202.0	201.0	28.0
TCAN337GDR	SOIC	D	8	2500	353.0	353.0	32.0

TUBE

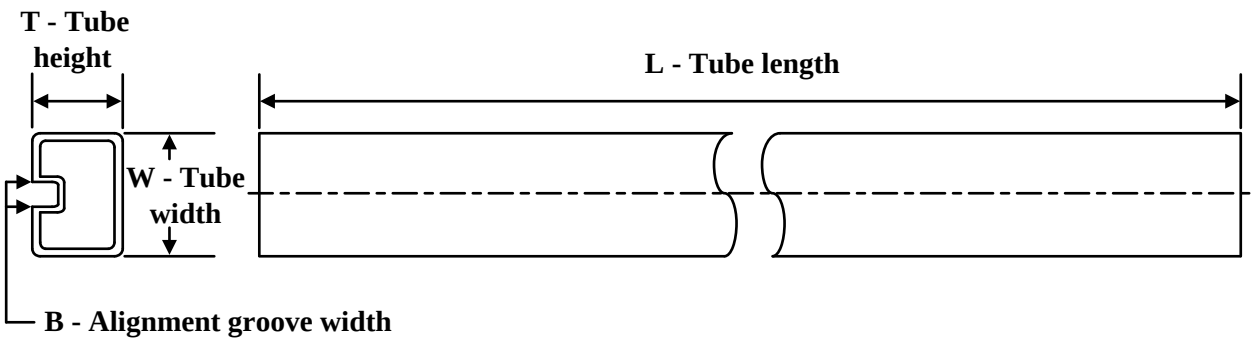

*All dimensions are nominal

Device	Package Name	Package Type	Pins	SPQ	L (mm)	W (mm)	T (µm)	B (mm)
TCAN330D	D	SOIC	8	75	507	8	3940	4.32
TCAN330GD	D	SOIC	8	75	507	8	3940	4.32
TCAN332D	D	SOIC	8	75	507	8	3940	4.32
TCAN332GD	D	SOIC	8	75	507	8	3940	4.32
TCAN334D	D	SOIC	8	75	507	8	3940	4.32
TCAN334GD	D	SOIC	8	75	507	8	3940	4.32
TCAN337D	D	SOIC	8	75	507	8	3940	4.32
TCAN337GD	D	SOIC	8	75	507	8	3940	4.32