TAPE AND REEL INFORMATION

REEL DIMENSIONS

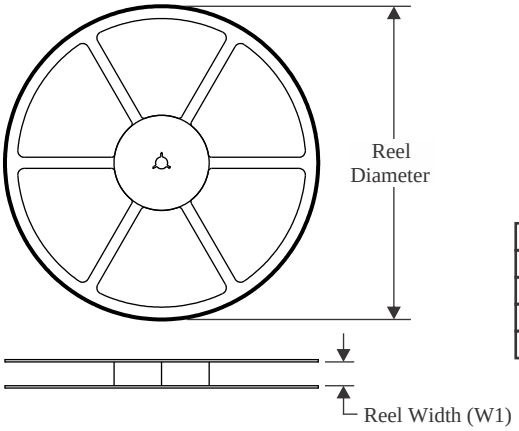

TAPE DIMENSIONS

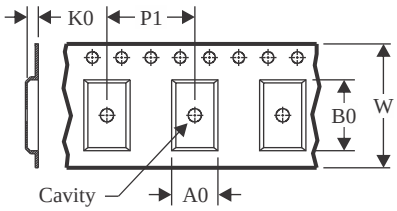

A0	Dimension designed to accommodate the component width
B0	Dimension designed to accommodate the component length
K0	Dimension designed to accommodate the component thickness
W	Overall width of the carrier tape
P1	Pitch between successive cavity centers

QUADRANT ASSIGNMENTS FOR PIN 1 ORIENTATION IN TAPE

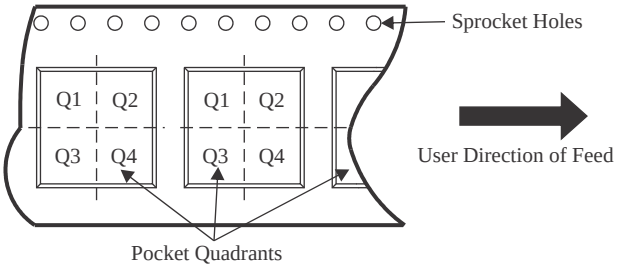

*All dimensions are nominal

Device	Package Type	Package Drawing	Pins	SPQ	Reel Diameter (mm)	Reel Width W1 (mm)	A0 (mm)	B0 (mm)	K0 (mm)	P1 (mm)	W (mm)	Pin1 Quadrant
TLV3701IDBVR	SOT-23	DBV	5	3000	180.0	8.4	3.2	3.2	1.4	4.0	8.0	Q3
TLV3701IDBVR	SOT-23	DBV	5	3000	180.0	8.4	3.2	3.2	1.4	4.0	8.0	Q3
TLV3701IDR	SOIC	D	8	2500	330.0	12.4	6.4	5.2	2.1	8.0	12.0	Q1
TLV3702IDGKR	VSSOP	DGK	8	2500	330.0	12.4	5.3	3.4	1.4	8.0	12.0	Q1
TLV3702IDR	SOIC	D	8	2500	330.0	12.4	6.4	5.2	2.1	8.0	12.0	Q1
TLV3704IDR	SOIC	D	14	2500	330.0	16.4	6.5	9.0	2.1	8.0	16.0	Q1
TLV3704IPWR	TSSOP	PW	14	2000	330.0	12.4	6.9	5.6	1.6	8.0	12.0	Q1

TAPE AND REEL BOX DIMENSIONS

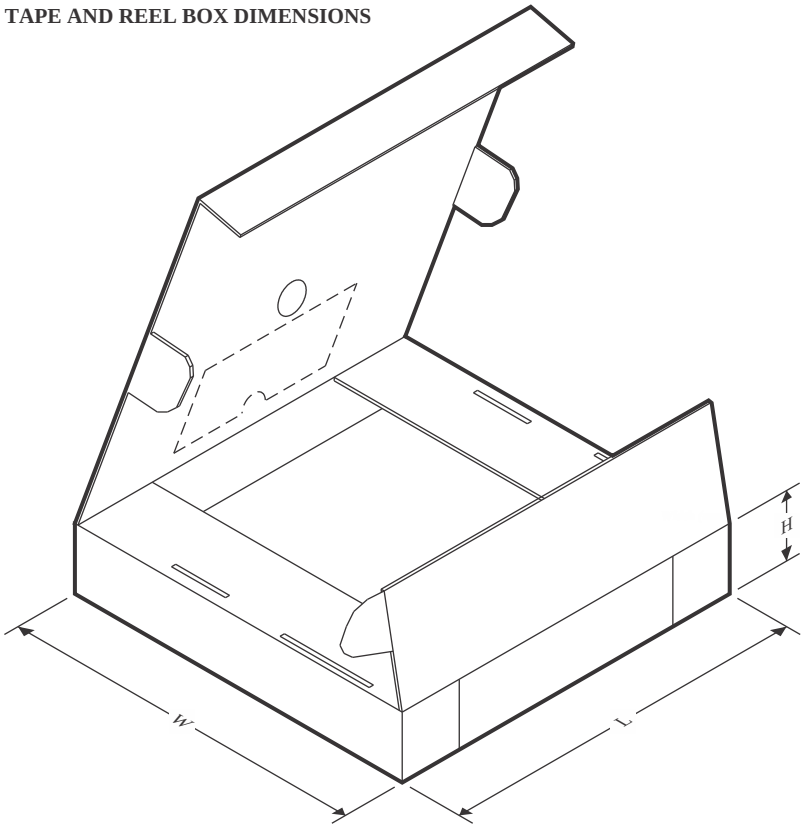

*All dimensions are nominal

Device	Package Type	Package Drawing	Pins	SPQ	Length (mm)	Width (mm)	Height (mm)
TLV3701IDBVR	SOT-23	DBV	5	3000	210.0	185.0	35.0
TLV3701IDBVR	SOT-23	DBV	5	3000	210.0	185.0	35.0
TLV3701IDR	SOIC	D	8	2500	353.0	353.0	32.0
TLV3702IDGKR	VSSOP	DGK	8	2500	358.0	335.0	35.0
TLV3702IDR	SOIC	D	8	2500	353.0	353.0	32.0
TLV3704IDR	SOIC	D	14	2500	353.0	353.0	32.0
TLV3704IPWR	TSSOP	PW	14	2000	356.0	356.0	35.0

TUBE

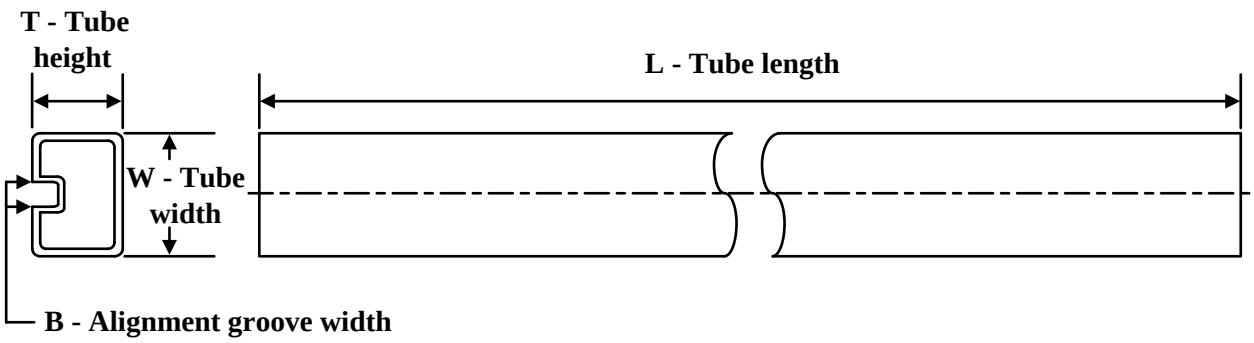

*All dimensions are nominal

Device	Package Name	Package Type	Pins	SPQ	L (mm)	W (mm)	T (µm)	B (mm)
TLV3701CD	D	SOIC	8	75	507	8	3940	4.32
TLV3701ID	D	SOIC	8	75	507	8	3940	4.32
TLV3701IP	P	PDIP	8	50	506	13.97	11230	4.32
TLV3702IP	P	PDIP	8	50	506	13.97	11230	4.32
TLV3704CD	D	SOIC	14	50	507	8	3940	4.32
TLV3704ID	D	SOIC	14	50	507	8	3940	4.32
TLV3704IN	N	PDIP	14	25	506	13.97	11230	4.32