TAPE AND REEL INFORMATION

REEL DIMENSIONS

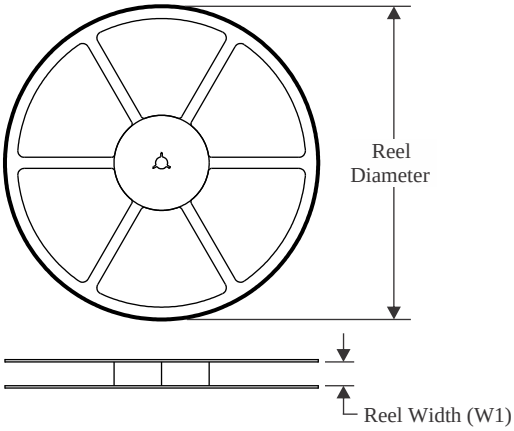

TAPE DIMENSIONS

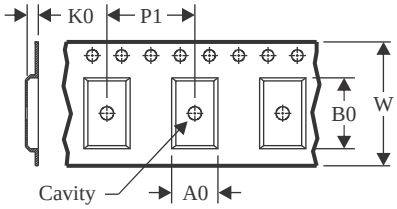

A0	Dimension designed to accommodate the component width
B0	Dimension designed to accommodate the component length
K0	Dimension designed to accommodate the component thickness
W	Overall width of the carrier tape
P1	Pitch between successive cavity centers

QUADRANT ASSIGNMENTS FOR PIN 1 ORIENTATION IN TAPE

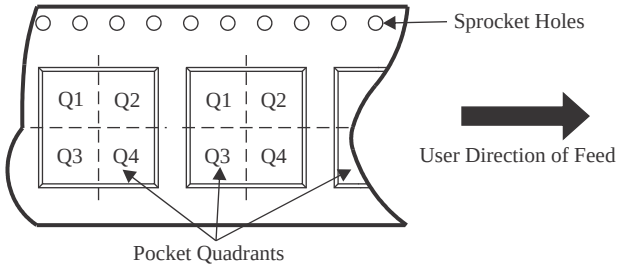

*All dimensions are nominal

Device	Package Type	Package Drawing	Pins	SPQ	Reel Diameter (mm)	Reel Width W1 (mm)	A0 (mm)	B0 (mm)	K0 (mm)	P1 (mm)	W (mm)	Pin1 Quadrant
TLV62150ARGTR	VQFN	RGT	16	3000	330.0	12.4	3.3	3.3	1.1	8.0	12.0	Q2
TLV62150ARGTT	VQFN	RGT	16	250	180.0	12.4	3.3	3.3	1.1	8.0	12.0	Q2
TLV62150ARGTT	VQFN	RGT	16	250	180.0	12.4	3.3	3.3	1.1	8.0	12.0	Q2
TLV62150RGTR	VQFN	RGT	16	3000	330.0	12.4	3.3	3.3	1.1	8.0	12.0	Q2
TLV62150RGTT	VQFN	RGT	16	250	180.0	12.4	3.3	3.3	1.1	8.0	12.0	Q2
TLV62150RGTT	VQFN	RGT	16	250	180.0	12.4	3.3	3.3	1.1	8.0	12.0	Q2

TAPE AND REEL BOX DIMENSIONS

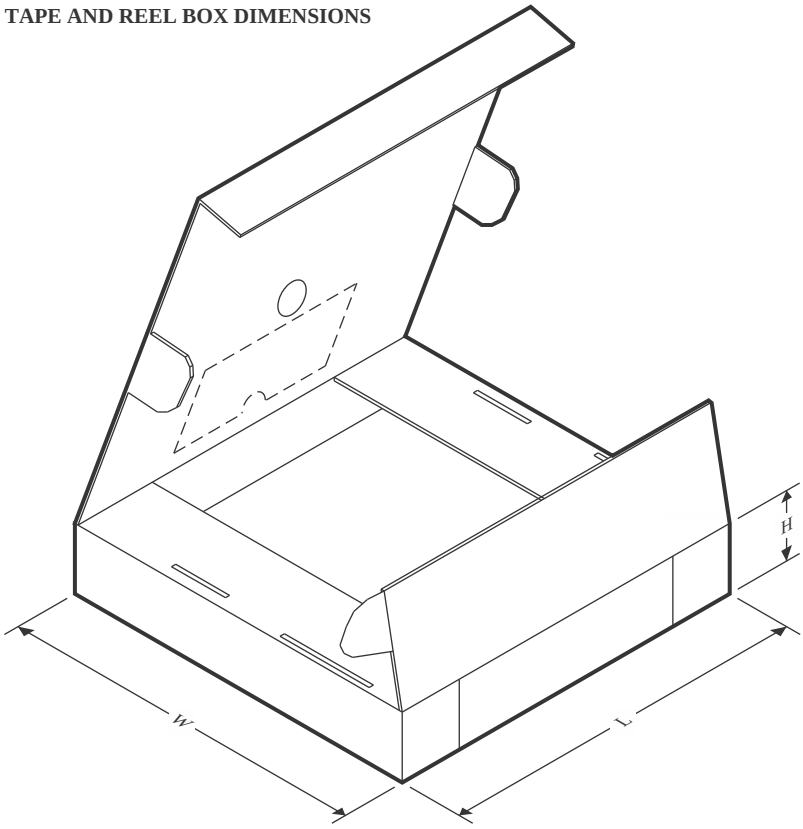

*All dimensions are nominal

Device	Package Type	Package Drawing	Pins	SPQ	Length (mm)	Width (mm)	Height (mm)
TLV62150ARGTR	VQFN	RGT	16	3000	552.0	346.0	36.0
TLV62150ARGTT	VQFN	RGT	16	250	552.0	185.0	36.0
TLV62150ARGTT	VQFN	RGT	16	250	210.0	185.0	35.0
TLV62150RGTR	VQFN	RGT	16	3000	552.0	346.0	36.0
TLV62150RGTT	VQFN	RGT	16	250	552.0	185.0	36.0
TLV62150RGTT	VQFN	RGT	16	250	210.0	185.0	35.0

TUBE

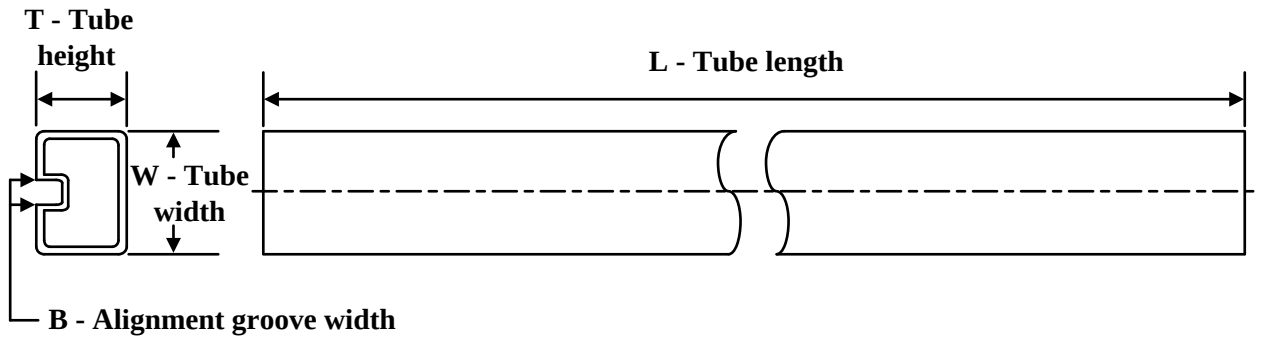

*All dimensions are nominal

Device	Package Name	Package Type	Pins	SPQ	L (mm)	W (mm)	T (µm)	B (mm)
TLV62150ARGTR	RGT	VQFN	16	3000	381	4.83	2286	0
TLV62150ARGTT	RGT	VQFN	16	250	381	4.83	2286	0
TLV62150RGTR	RGT	VQFN	16	3000	381	4.83	2286	0
TLV62150RGTT	RGT	VQFN	16	250	381	4.83	2286	0