TAPE AND REEL INFORMATION

REEL DIMENSIONS

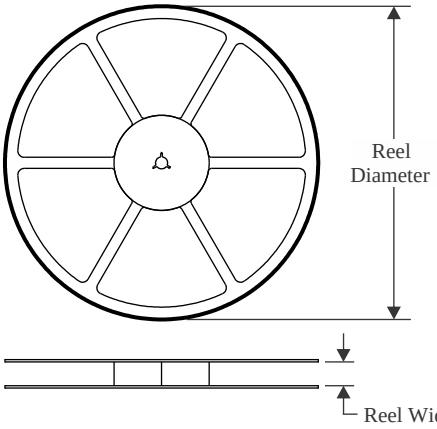

TAPE DIMENSIONS

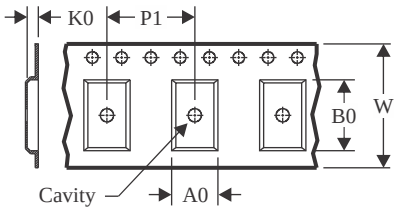

A0	Dimension designed to accommodate the component width
B0	Dimension designed to accommodate the component length
K0	Dimension designed to accommodate the component thickness
W	Overall width of the carrier tape
P1	Pitch between successive cavity centers

QUADRANT ASSIGNMENTS FOR PIN 1 ORIENTATION IN TAPE

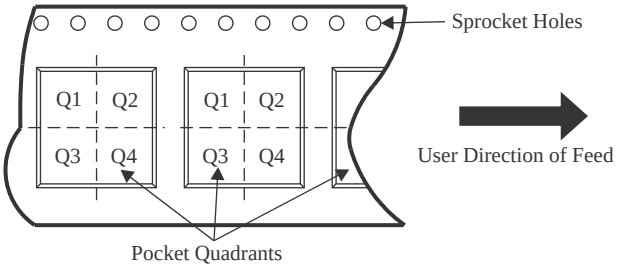

*All dimensions are nominal

Device	Package Type	Package Drawing	Pins	SPQ	Reel Diameter (mm)	Reel Width W1 (mm)	A0 (mm)	B0 (mm)	K0 (mm)	P1 (mm)	W (mm)	Pin1 Quadrant
TLV9361QDBVRQ1	SOT-23	DBV	5	3000	180.0	8.4	3.2	3.2	1.4	4.0	8.0	Q3
TLV9361QDCKRQ1	SC70	DCK	5	3000	178.0	9.0	2.4	2.5	1.2	4.0	8.0	Q3
TLV9362QDGKRQ1	VSSOP	DGK	8	2500	330.0	12.4	5.3	3.4	1.4	8.0	12.0	Q1
TLV9362QDRQ1	SOIC	D	8	3000	330.0	12.4	6.4	5.2	2.1	8.0	12.0	Q1
TLV9362QPWRQ1	TSSOP	PW	8	3000	330.0	12.4	7.0	3.6	1.6	8.0	12.0	Q1
TLV9364QDRQ1	SOIC	D	14	3000	330.0	16.4	6.5	9.0	2.1	8.0	16.0	Q1
TLV9364QPWRQ1	TSSOP	PW	14	3000	330.0	12.4	6.9	5.6	1.6	8.0	12.0	Q1

TAPE AND REEL BOX DIMENSIONS

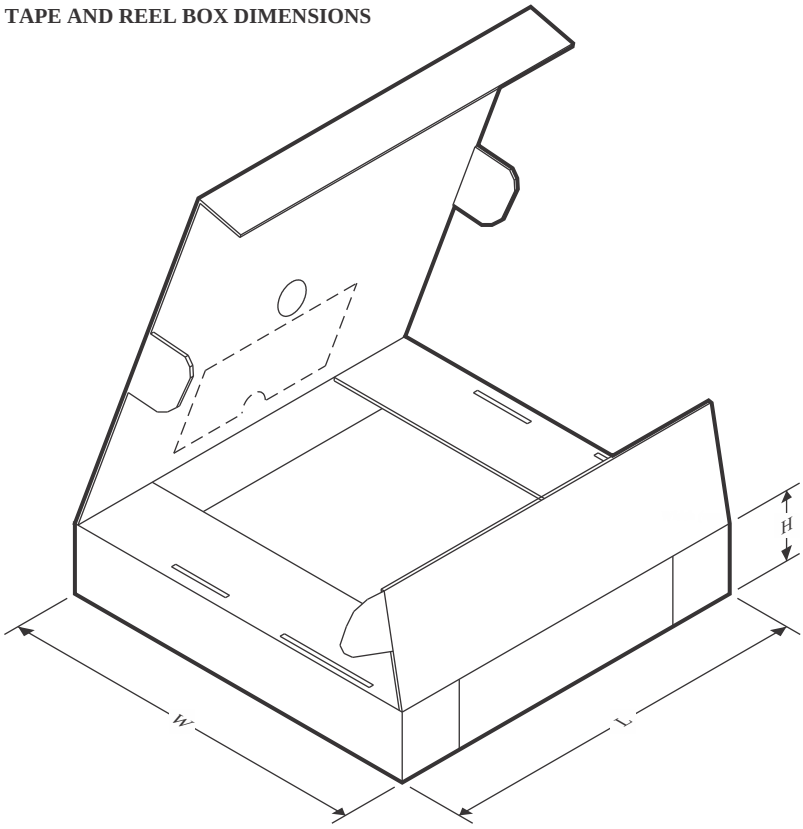

*All dimensions are nominal

Device	Package Type	Package Drawing	Pins	SPQ	Length (mm)	Width (mm)	Height (mm)
TLV9361QDBVRQ1	SOT-23	DBV	5	3000	210.0	185.0	35.0
TLV9361QDCKRQ1	SC70	DCK	5	3000	180.0	180.0	18.0
TLV9362QDGKRQ1	VSSOP	DGK	8	2500	366.0	364.0	50.0
TLV9362QDRQ1	SOIC	D	8	3000	356.0	356.0	35.0
TLV9362QPWRQ1	TSSOP	PW	8	3000	353.0	353.0	32.0
TLV9364QDRQ1	SOIC	D	14	3000	356.0	356.0	35.0
TLV9364QPWRQ1	TSSOP	PW	14	3000	356.0	356.0	35.0