TAPE AND REEL INFORMATION

REEL DIMENSIONS

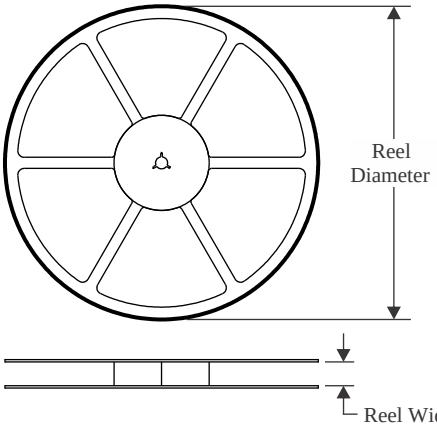

TAPE DIMENSIONS

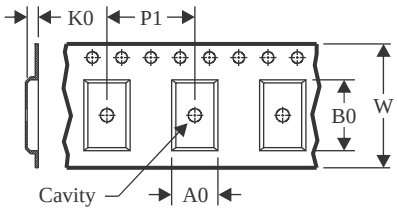

A0	Dimension designed to accommodate the component width
B0	Dimension designed to accommodate the component length
K0	Dimension designed to accommodate the component thickness
W	Overall width of the carrier tape
P1	Pitch between successive cavity centers

QUADRANT ASSIGNMENTS FOR PIN 1 ORIENTATION IN TAPE

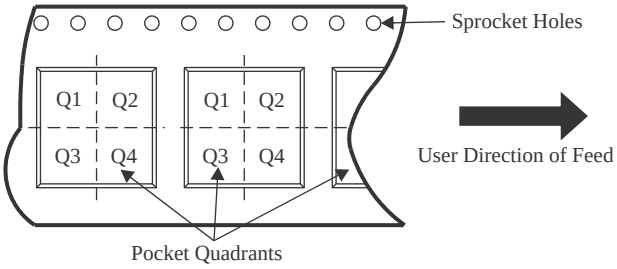

*All dimensions are nominal

Device	Package Type	Package Drawing	Pins	SPQ	Reel Diameter (mm)	Reel Width W1 (mm)	A0 (mm)	B0 (mm)	K0 (mm)	P1 (mm)	W (mm)	Pin1 Quadrant
F2800152QPHPRQ1	HTQFP	PHP	48	1000	330.0	16.4	9.6	9.6	1.5	12.0	16.0	Q2
F2800152QRHBRQ1	VQFN	RHB	32	3000	330.0	12.4	5.3	5.3	1.1	8.0	12.0	Q2
F2800153QPHPRQ1	HTQFP	PHP	48	1000	330.0	16.4	9.6	9.6	1.5	12.0	16.0	Q2
F2800153QRHBRQ1	VQFN	RHB	32	3000	330.0	12.4	5.3	5.3	1.1	8.0	12.0	Q2
F2800154QPHPRQ1	HTQFP	PHP	48	1000	330.0	16.4	9.6	9.6	1.5	12.0	16.0	Q2
F2800154QPMRQ1	LQFP	PM	64	1000	330.0	24.4	13.0	13.0	2.1	16.0	24.0	Q2
F2800154QPNRQ1	LQFP	PN	80	1000	330.0	24.4	16.0	16.0	2.0	24.0	24.0	Q2
F2800154QRHBRQ1	VQFN	RHB	32	3000	330.0	12.4	5.3	5.3	1.1	8.0	12.0	Q2
F2800155QPHPRQ1	HTQFP	PHP	48	1000	330.0	16.4	9.6	9.6	1.5	12.0	16.0	Q2
F2800155QPMRQ1	LQFP	PM	64	1000	330.0	24.4	13.0	13.0	2.1	16.0	24.0	Q2
F2800155QPNRQ1	LQFP	PN	80	1000	330.0	24.4	16.0	16.0	2.0	24.0	24.0	Q2
F2800155QRHBRQ1	VQFN	RHB	32	3000	330.0	12.4	5.3	5.3	1.1	8.0	12.0	Q2
F2800155SPHPR	HTQFP	PHP	48	1000	330.0	16.4	9.6	9.6	1.5	12.0	16.0	Q2
F2800155SPMR	LQFP	PM	64	1000	330.0	24.4	13.0	13.0	2.1	16.0	24.0	Q2
F2800155SPNR	LQFP	PN	80	1000	330.0	24.4	16.0	16.0	2.0	24.0	24.0	Q2
F2800156EPHPRQ1	HTQFP	PHP	48	1000	330.0	16.4	9.6	9.6	1.5	12.0	16.0	Q2

Device	Package Type	Package Drawing	Pins	SPQ	Reel Diameter (mm)	Reel Width W1 (mm)	A0 (mm)	B0 (mm)	K0 (mm)	P1 (mm)	W (mm)	Pin1 Quadrant
F2800156QPHPRQ1	HTQFP	PHP	48	1000	330.0	16.4	9.6	9.6	1.5	12.0	16.0	Q2
F2800156QPMRQ1	LQFP	PM	64	1000	330.0	24.4	13.0	13.0	2.1	16.0	24.0	Q2
F2800156QPNRQ1	LQFP	PN	80	1000	330.0	24.4	16.0	16.0	2.0	24.0	24.0	Q2
F2800156QRHBRQ1	VQFN	RHB	32	3000	330.0	12.4	5.3	5.3	1.1	8.0	12.0	Q2
F2800157EPHPRQ1	HTQFP	PHP	48	1000	330.0	16.4	9.6	9.6	1.5	12.0	16.0	Q2
F2800157QPHPRQ1	HTQFP	PHP	48	1000	330.0	16.4	9.6	9.6	1.5	12.0	16.0	Q2
F2800157QPMRQ1	LQFP	PM	64	1000	330.0	24.4	13.0	13.0	2.1	16.0	24.0	Q2
F2800157QPNRQ1	LQFP	PN	80	1000	330.0	24.4	16.0	16.0	2.0	24.0	24.0	Q2
F2800157QRHBRQ1	VQFN	RHB	32	3000	330.0	12.4	5.3	5.3	1.1	8.0	12.0	Q2
F2800157SPHPR	HTQFP	PHP	48	1000	330.0	16.4	9.6	9.6	1.5	12.0	16.0	Q2
F2800157SPMR	LQFP	PM	64	1000	330.0	24.4	13.0	13.0	2.1	16.0	24.0	Q2
F2800157SPNR	LQFP	PN	80	1000	330.0	24.4	16.0	16.0	2.0	24.0	24.0	Q2

TAPE AND REEL BOX DIMENSIONS

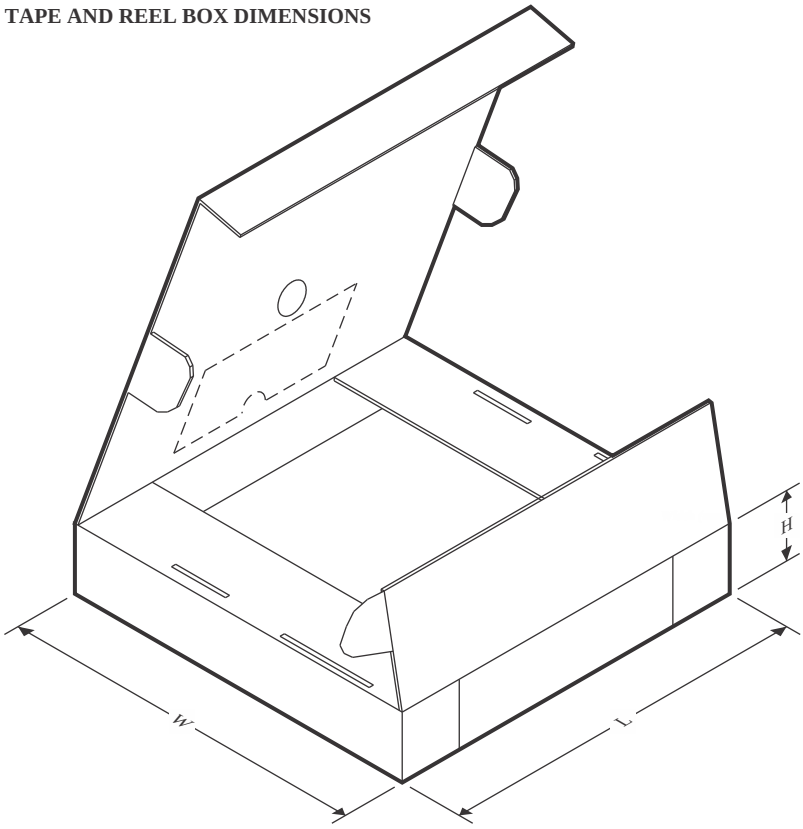

*All dimensions are nominal

Device	Package Type	Package Drawing	Pins	SPQ	Length (mm)	Width (mm)	Height (mm)
F2800152QPHPRQ1	HTQFP	PHP	48	1000	336.6	336.6	31.8
F2800152QRHBRQ1	VQFN	RHB	32	3000	367.0	367.0	35.0
F2800153QPHPRQ1	HTQFP	PHP	48	1000	336.6	336.6	31.8
F2800153QRHBRQ1	VQFN	RHB	32	3000	367.0	367.0	35.0
F2800154QPHPRQ1	HTQFP	PHP	48	1000	336.6	336.6	31.8
F2800154QPMRQ1	LQFP	PM	64	1000	336.6	336.6	41.3
F2800154QPNRQ1	LQFP	PN	80	1000	367.0	367.0	55.0
F2800154QRHBRQ1	VQFN	RHB	32	3000	367.0	367.0	35.0
F2800155QPHPRQ1	HTQFP	PHP	48	1000	336.6	336.6	31.8
F2800155QPMRQ1	LQFP	PM	64	1000	336.6	336.6	41.3
F2800155QPNRQ1	LQFP	PN	80	1000	367.0	367.0	55.0
F2800155QRHBRQ1	VQFN	RHB	32	3000	367.0	367.0	35.0
F2800155SPHPR	HTQFP	PHP	48	1000	336.6	336.6	31.8
F2800155SPMR	LQFP	PM	64	1000	336.6	336.6	41.3
F2800155SPNR	LQFP	PN	80	1000	367.0	367.0	55.0
F2800156EPHPRQ1	HTQFP	PHP	48	1000	336.6	336.6	31.8
F2800156QPHPRQ1	HTQFP	PHP	48	1000	336.6	336.6	31.8
F2800156QPMRQ1	LQFP	PM	64	1000	336.6	336.6	41.3

Device	Package Type	Package Drawing	Pins	SPQ	Length (mm)	Width (mm)	Height (mm)
F2800156QPNRQ1	LQFP	PN	80	1000	367.0	367.0	55.0
F2800156QRHBRQ1	VQFN	RHB	32	3000	367.0	367.0	35.0
F2800157EPHPRQ1	HTQFP	PHP	48	1000	336.6	336.6	31.8
F2800157QPHPRQ1	HTQFP	PHP	48	1000	336.6	336.6	31.8
F2800157QPMRQ1	LQFP	PM	64	1000	336.6	336.6	41.3
F2800157QPNRQ1	LQFP	PN	80	1000	367.0	367.0	55.0
F2800157QRHBRQ1	VQFN	RHB	32	3000	367.0	367.0	35.0
F2800157SPHPR	HTQFP	PHP	48	1000	336.6	336.6	31.8
F2800157SPMR	LQFP	PM	64	1000	336.6	336.6	41.3
F2800157SPNR	LQFP	PN	80	1000	367.0	367.0	55.0

TRAY

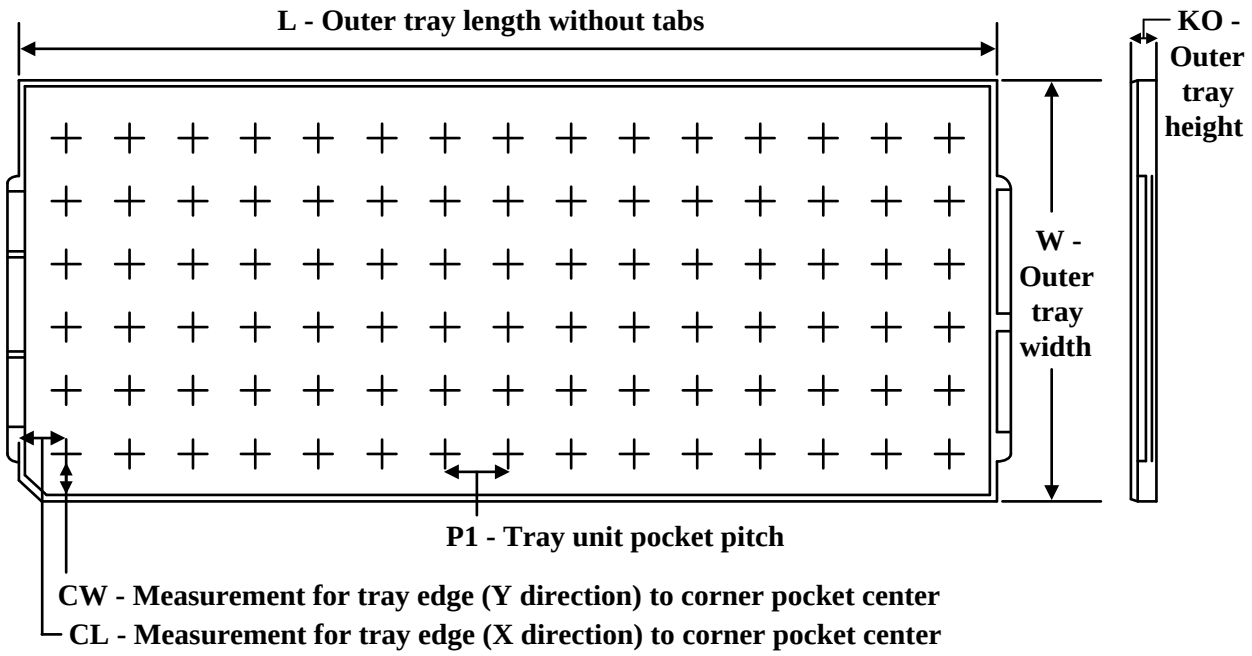

Chamfer on Tray corner indicates Pin 1 orientation of packed units.

*All dimensions are nominal

Device	Package Name	Package Type	Pins	SPQ	Unit array matrix	Max temperature (°C)	L (mm)	W (mm)	K0 (µm)	P1 (mm)	CL (mm)	CW (mm)
F2800156EPHPQ1	PHP	HTQFP	48	250	10 x 25	150	315	135.9	7620	12.2	11.1	11.25
F2800156QPHPQ1	PHP	HTQFP	48	250	10 x 25	150	315	135.9	7620	12.2	11.1	11.25
F2800156QPMQ1	PM	LQFP	64	160	8 X 20	150	315	135.9	7620	15.2	13.1	13
F2800156QPNQ1	PN	LQFP	80	119	7 X 17	150	315	135.9	7620	17.9	14.3	13.95
F2800157EPHPQ1	PHP	HTQFP	48	250	10 x 25	150	315	135.9	7620	12.2	11.1	11.25
F2800157QPHPQ1	PHP	HTQFP	48	250	10 x 25	150	315	135.9	7620	12.2	11.1	11.25
F2800157QPMQ1	PM	LQFP	64	160	8 X 20	150	315	135.9	7620	15.2	13.1	13
F2800157QPNQ1	PN	LQFP	80	119	7 X 17	150	315	135.9	7620	17.9	14.3	13.95
F2800157SPHP	PHP	HTQFP	48	250	10 x 25	150	315	135.9	7620	12.2	11.1	11.25
F2800157SPM	PM	LQFP	64	160	8 X 20	150	315	135.9	7620	15.2	13.1	13
F2800157SPN	PN	LQFP	80	119	7 X 17	150	315	135.9	7620	17.9	14.3	13.95