TAPE AND REEL INFORMATION

REEL DIMENSIONS

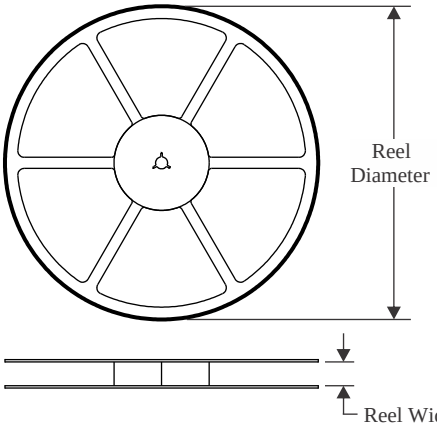

TAPE DIMENSIONS

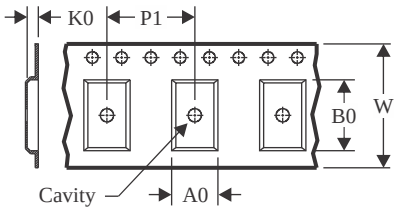

A0	Dimension designed to accommodate the component width
B0	Dimension designed to accommodate the component length
K0	Dimension designed to accommodate the component thickness
W	Overall width of the carrier tape
P1	Pitch between successive cavity centers

QUADRANT ASSIGNMENTS FOR PIN 1 ORIENTATION IN TAPE

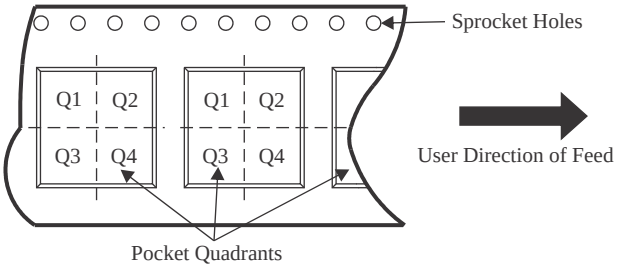

*All dimensions are nominal

Device	Package Type	Package Drawing	Pins	SPQ	Reel Diameter (mm)	Reel Width W1 (mm)	A0 (mm)	B0 (mm)	K0 (mm)	P1 (mm)	W (mm)	Pin1 Quadrant
TPS22920LYZPR	DSBGA	YZP	8	3000	180.0	8.4	1.02	2.02	0.63	4.0	8.0	Q1
TPS22920LYZPT	DSBGA	YZP	8	250	180.0	8.4	1.02	2.02	0.63	4.0	8.0	Q1
TPS22920YZPR	DSBGA	YZP	8	3000	180.0	8.4	1.02	2.02	0.63	4.0	8.0	Q1
TPS22920YZPR	DSBGA	YZP	8	3000	180.0	8.4	1.02	2.02	0.63	4.0	8.0	Q1
TPS22920YZPRB	DSBGA	YZP	8	3000	180.0	8.4	1.02	2.02	0.63	4.0	8.0	Q1
TPS22920YZPRB	DSBGA	YZP	8	3000	180.0	8.4	1.02	2.02	0.63	4.0	8.0	Q1
TPS22920YZPT	DSBGA	YZP	8	250	180.0	8.4	1.02	2.02	0.63	4.0	8.0	Q1
TPS22920YZPT	DSBGA	YZP	8	250	180.0	8.4	1.02	2.02	0.63	4.0	8.0	Q1

TAPE AND REEL BOX DIMENSIONS

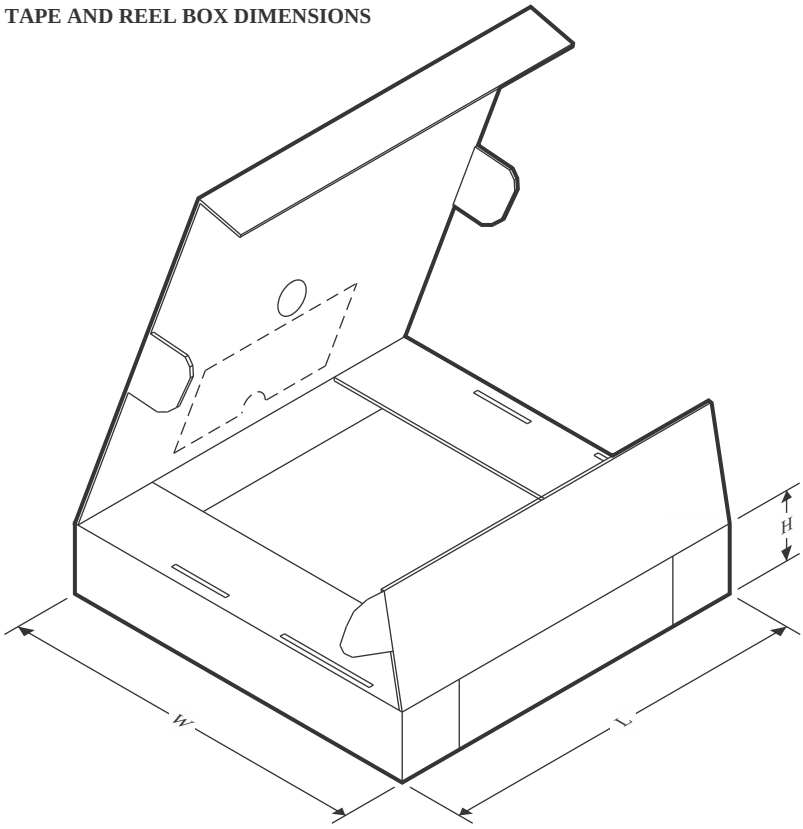

*All dimensions are nominal

Device	Package Type	Package Drawing	Pins	SPQ	Length (mm)	Width (mm)	Height (mm)
TPS22920LYZPR	DSBGA	YZP	8	3000	182.0	182.0	20.0
TPS22920LYZPT	DSBGA	YZP	8	250	182.0	182.0	20.0
TPS22920YZPR	DSBGA	YZP	8	3000	182.0	182.0	20.0
TPS22920YZPR	DSBGA	YZP	8	3000	182.0	182.0	20.0
TPS22920YZPRB	DSBGA	YZP	8	3000	182.0	182.0	20.0
TPS22920YZPRB	DSBGA	YZP	8	3000	182.0	182.0	20.0
TPS22920YZPT	DSBGA	YZP	8	250	182.0	182.0	20.0
TPS22920YZPT	DSBGA	YZP	8	250	182.0	182.0	20.0