TAPE AND REEL INFORMATION

REEL DIMENSIONS

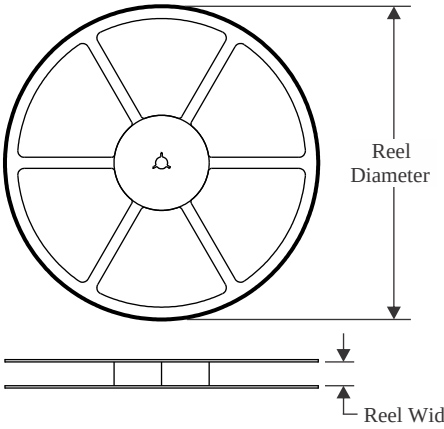

TAPE DIMENSIONS

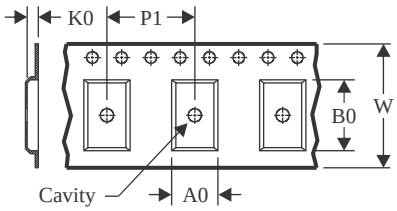

A0	Dimension designed to accommodate the component width
B0	Dimension designed to accommodate the component length
K0	Dimension designed to accommodate the component thickness
W	Overall width of the carrier tape
P1	Pitch between successive cavity centers

QUADRANT ASSIGNMENTS FOR PIN 1 ORIENTATION IN TAPE

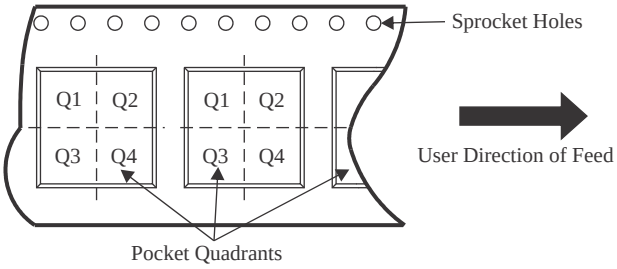

*All dimensions are nominal

Device	Package Type	Package Drawing	Pins	SPQ	Reel Diameter (mm)	Reel Width W1 (mm)	A0 (mm)	B0 (mm)	K0 (mm)	P1 (mm)	W (mm)	Pin1 Quadrant
TPS25942ARVCR	WQFN	RVC	20	3000	330.0	12.4	3.3	4.3	1.1	8.0	12.0	Q1
TPS25942ARVCT	WQFN	RVC	20	250	180.0	12.4	3.3	4.3	1.1	8.0	12.0	Q1
TPS25942LRVCR	WQFN	RVC	20	3000	330.0	12.4	3.3	4.3	1.1	8.0	12.0	Q1
TPS25942LRVCT	WQFN	RVC	20	250	180.0	12.4	3.3	4.3	1.1	8.0	12.0	Q1
TPS25944ARVCR	WQFN	RVC	20	3000	330.0	12.4	3.3	4.3	1.1	8.0	12.0	Q1
TPS25944ARVCT	WQFN	RVC	20	250	180.0	12.4	3.3	4.3	1.1	8.0	12.0	Q1
TPS25944LRVCR	WQFN	RVC	20	3000	330.0	12.4	3.3	4.3	1.1	8.0	12.0	Q1
TPS25944LRVCT	WQFN	RVC	20	250	180.0	12.4	3.3	4.3	1.1	8.0	12.0	Q1

TAPE AND REEL BOX DIMENSIONS

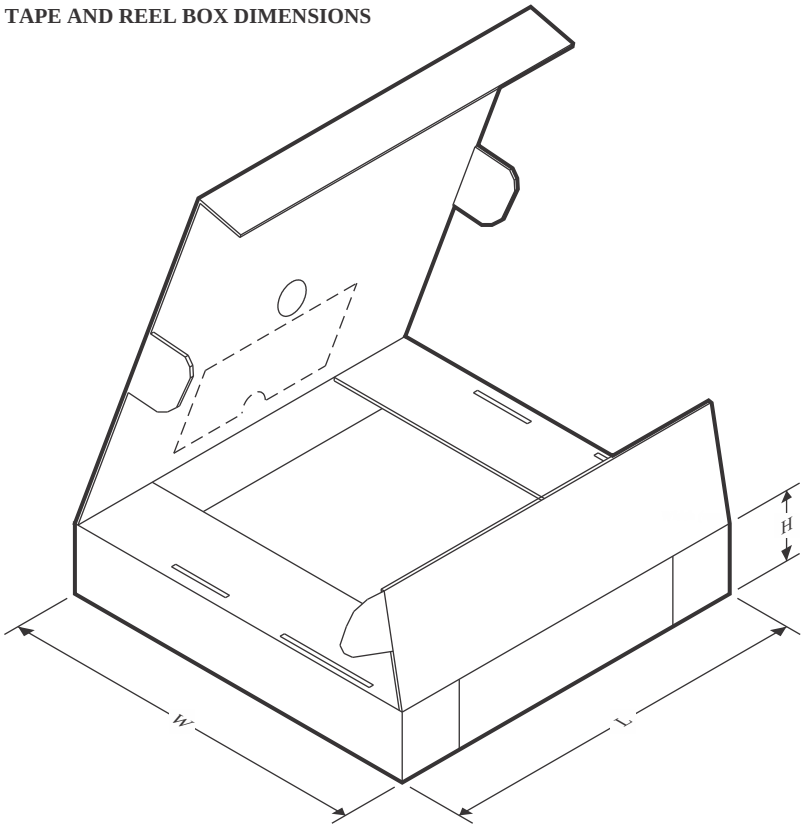

*All dimensions are nominal

Device	Package Type	Package Drawing	Pins	SPQ	Length (mm)	Width (mm)	Height (mm)
TPS25942ARVCR	WQFN	RVC	20	3000	346.0	346.0	33.0
TPS25942ARVCT	WQFN	RVC	20	250	210.0	185.0	35.0
TPS25942LRVCR	WQFN	RVC	20	3000	346.0	346.0	33.0
TPS25942LRVCT	WQFN	RVC	20	250	210.0	185.0	35.0
TPS25944ARVCR	WQFN	RVC	20	3000	346.0	346.0	33.0
TPS25944ARVCT	WQFN	RVC	20	250	210.0	185.0	35.0
TPS25944LRVCR	WQFN	RVC	20	3000	346.0	346.0	33.0
TPS25944LRVCT	WQFN	RVC	20	250	210.0	185.0	35.0