TAPE AND REEL INFORMATION

REEL DIMENSIONS

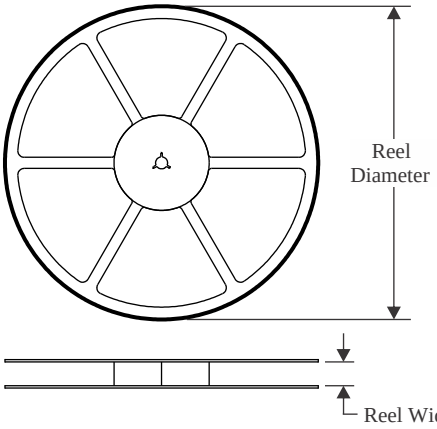

TAPE DIMENSIONS

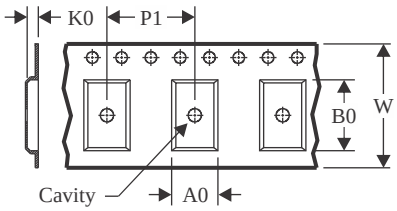

A0	Dimension designed to accommodate the component width
B0	Dimension designed to accommodate the component length
K0	Dimension designed to accommodate the component thickness
W	Overall width of the carrier tape
P1	Pitch between successive cavity centers

QUADRANT ASSIGNMENTS FOR PIN 1 ORIENTATION IN TAPE

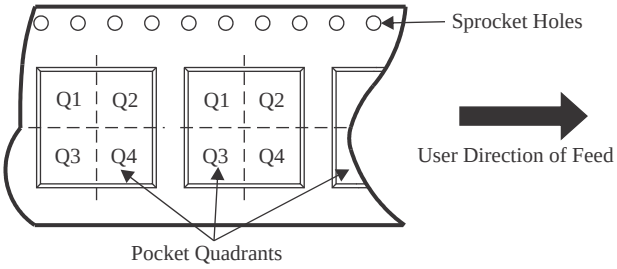

*All dimensions are nominal

Device	Package Type	Package Drawing	Pins	SPQ	Reel Diameter (mm)	Reel Width W1 (mm)	A0 (mm)	B0 (mm)	K0 (mm)	P1 (mm)	W (mm)	Pin1 Quadrant
TPS60400DBVR	SOT-23	DBV	5	3000	180.0	8.4	3.2	3.2	1.4	4.0	8.0	Q3
TPS60400DBVR	SOT-23	DBV	5	3000	178.0	9.0	3.23	3.17	1.37	4.0	8.0	Q3
TPS60400DBVRG4	SOT-23	DBV	5	3000	178.0	9.0	3.23	3.17	1.37	4.0	8.0	Q3
TPS60400DBVT	SOT-23	DBV	5	250	180.0	8.4	3.2	3.2	1.4	4.0	8.0	Q3
TPS60400DBVTG4	SOT-23	DBV	5	250	178.0	9.0	3.23	3.17	1.37	4.0	8.0	Q3
TPS60401DBVR	SOT-23	DBV	5	3000	180.0	8.4	3.2	3.2	1.4	4.0	8.0	Q3
TPS60401DBVR	SOT-23	DBV	5	3000	178.0	9.0	3.3	3.2	1.4	4.0	8.0	Q3
TPS60401DBVRG4	SOT-23	DBV	5	3000	178.0	9.0	3.3	3.2	1.4	4.0	8.0	Q3
TPS60401DBVT	SOT-23	DBV	5	250	180.0	8.4	3.2	3.2	1.4	4.0	8.0	Q3
TPS60401DBVTG4	SOT-23	DBV	5	250	178.0	9.0	3.23	3.17	1.37	4.0	8.0	Q3
TPS60402DBVR	SOT-23	DBV	5	3000	180.0	8.4	3.2	3.2	1.4	4.0	8.0	Q3
TPS60402DBVR	SOT-23	DBV	5	3000	178.0	9.0	3.3	3.2	1.4	4.0	8.0	Q3
TPS60402DBVRG4	SOT-23	DBV	5	3000	178.0	9.0	3.3	3.2	1.4	4.0	8.0	Q3
TPS60402DBVT	SOT-23	DBV	5	250	180.0	8.4	3.2	3.2	1.4	4.0	8.0	Q3
TPS60402DBVTG4	SOT-23	DBV	5	250	178.0	9.0	3.23	3.17	1.37	4.0	8.0	Q3
TPS60403DBVR	SOT-23	DBV	5	3000	180.0	8.4	3.2	3.2	1.4	4.0	8.0	Q3

Device	Package Type	Package Drawing	Pins	SPQ	Reel Diameter (mm)	Reel Width W1 (mm)	A0 (mm)	B0 (mm)	K0 (mm)	P1 (mm)	W (mm)	Pin1 Quadrant
TPS60403DBVR	SOT-23	DBV	5	3000	178.0	9.0	3.23	3.17	1.37	4.0	8.0	Q3
TPS60403DBVRG4	SOT-23	DBV	5	3000	178.0	9.0	3.23	3.17	1.37	4.0	8.0	Q3
TPS60403DBVT	SOT-23	DBV	5	250	178.0	9.0	3.23	3.17	1.37	4.0	8.0	Q3
TPS60403DBVT	SOT-23	DBV	5	250	180.0	8.4	3.2	3.2	1.4	4.0	8.0	Q3
TPS60403DBVTG4	SOT-23	DBV	5	250	178.0	9.0	3.23	3.17	1.37	4.0	8.0	Q3

TAPE AND REEL BOX DIMENSIONS

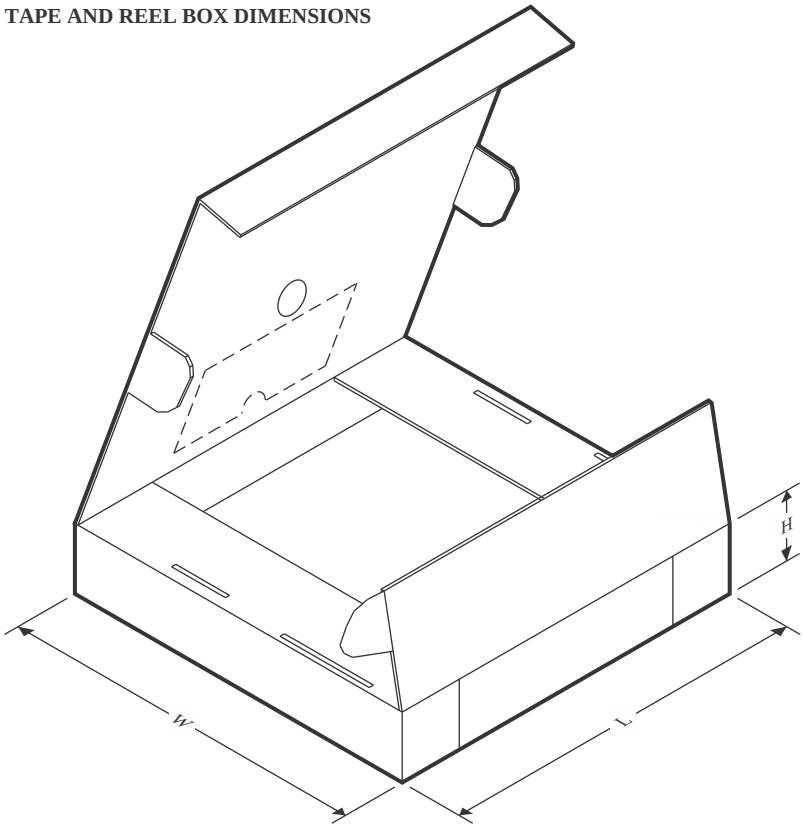

*All dimensions are nominal

Device	Package Type	Package Drawing	Pins	SPQ	Length (mm)	Width (mm)	Height (mm)
TPS60400DBVR	SOT-23	DBV	5	3000	210.0	185.0	35.0
TPS60400DBVR	SOT-23	DBV	5	3000	180.0	180.0	18.0
TPS60400DBVRG4	SOT-23	DBV	5	3000	180.0	180.0	18.0
TPS60400DBVT	SOT-23	DBV	5	250	210.0	185.0	35.0
TPS60400DBVTG4	SOT-23	DBV	5	250	180.0	180.0	18.0
TPS60401DBVR	SOT-23	DBV	5	3000	210.0	185.0	35.0
TPS60401DBVR	SOT-23	DBV	5	3000	180.0	180.0	18.0
TPS60401DBVRG4	SOT-23	DBV	5	3000	180.0	180.0	18.0
TPS60401DBVT	SOT-23	DBV	5	250	210.0	185.0	35.0
TPS60401DBVTG4	SOT-23	DBV	5	250	180.0	180.0	18.0
TPS60402DBVR	SOT-23	DBV	5	3000	210.0	185.0	35.0
TPS60402DBVR	SOT-23	DBV	5	3000	180.0	180.0	18.0
TPS60402DBVRG4	SOT-23	DBV	5	3000	180.0	180.0	18.0
TPS60402DBVT	SOT-23	DBV	5	250	210.0	185.0	35.0
TPS60402DBVTG4	SOT-23	DBV	5	250	180.0	180.0	18.0
TPS60403DBVR	SOT-23	DBV	5	3000	210.0	185.0	35.0
TPS60403DBVR	SOT-23	DBV	5	3000	180.0	180.0	18.0
TPS60403DBVRG4	SOT-23	DBV	5	3000	180.0	180.0	18.0

Device	Package Type	Package Drawing	Pins	SPQ	Length (mm)	Width (mm)	Height (mm)
TPS60403DBVT	SOT-23	DBV	5	250	180.0	180.0	18.0
TPS60403DBVT	SOT-23	DBV	5	250	210.0	185.0	35.0
TPS60403DBVTG4	SOT-23	DBV	5	250	180.0	180.0	18.0