TAPE AND REEL INFORMATION

REEL DIMENSIONS

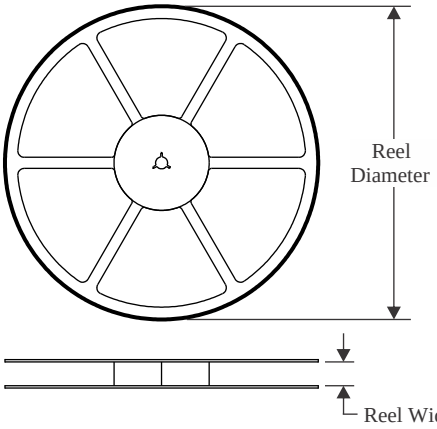

TAPE DIMENSIONS

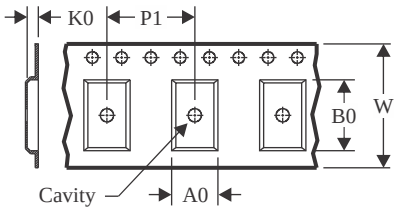

A0	Dimension designed to accommodate the component width
B0	Dimension designed to accommodate the component length
K0	Dimension designed to accommodate the component thickness
W	Overall width of the carrier tape
P1	Pitch between successive cavity centers

QUADRANT ASSIGNMENTS FOR PIN 1 ORIENTATION IN TAPE

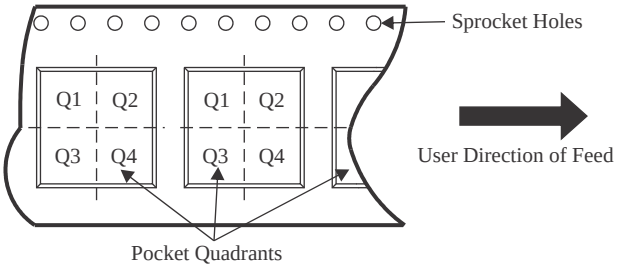

*All dimensions are nominal

Device	Package Type	Package Drawing	Pins	SPQ	Reel Diameter (mm)	Reel Width W1 (mm)	A0 (mm)	B0 (mm)	K0 (mm)	P1 (mm)	W (mm)	Pin1 Quadrant
TPS62824DMQR	VSON-HR	DMQ	6	3000	180.0	8.4	1.7	1.7	1.14	4.0	8.0	Q2
TPS6282518DMQR	VSON-HR	DMQ	6	3000	180.0	8.4	1.7	1.7	1.14	4.0	8.0	Q2
TPS6282518DMQT	VSON-HR	DMQ	6	250	180.0	8.4	1.7	1.7	1.14	4.0	8.0	Q2
TPS6282533DMQR	VSON-HR	DMQ	6	3000	180.0	8.4	1.7	1.7	1.14	4.0	8.0	Q2
TPS62825DMQR	VSON-HR	DMQ	6	3000	180.0	8.4	1.7	1.7	1.14	4.0	8.0	Q2
TPS6282618DMQR	VSON-HR	DMQ	6	3000	180.0	8.4	1.7	1.7	1.14	4.0	8.0	Q2
TPS6282618DMQT	VSON-HR	DMQ	6	250	180.0	8.4	1.7	1.7	1.14	4.0	8.0	Q2
TPS62826ADMQR	VSON-HR	DMQ	6	3000	180.0	8.4	1.7	1.7	1.14	4.0	8.0	Q2
TPS62826DMQT	VSON-HR	DMQ	6	250	180.0	8.4	1.7	1.7	1.14	4.0	8.0	Q2

Device	Package Type	Package Drawing	Pins	SPQ	Reel Diameter (mm)	Reel Width W1 (mm)	A0 (mm)	B0 (mm)	K0 (mm)	P1 (mm)	W (mm)	Pin1 Quadrant
TPS62827DMQT	VSON-HR	DMQ	6	250	180.0	8.4	1.7	1.7	1.14	4.0	8.0	Q2

TAPE AND REEL BOX DIMENSIONS

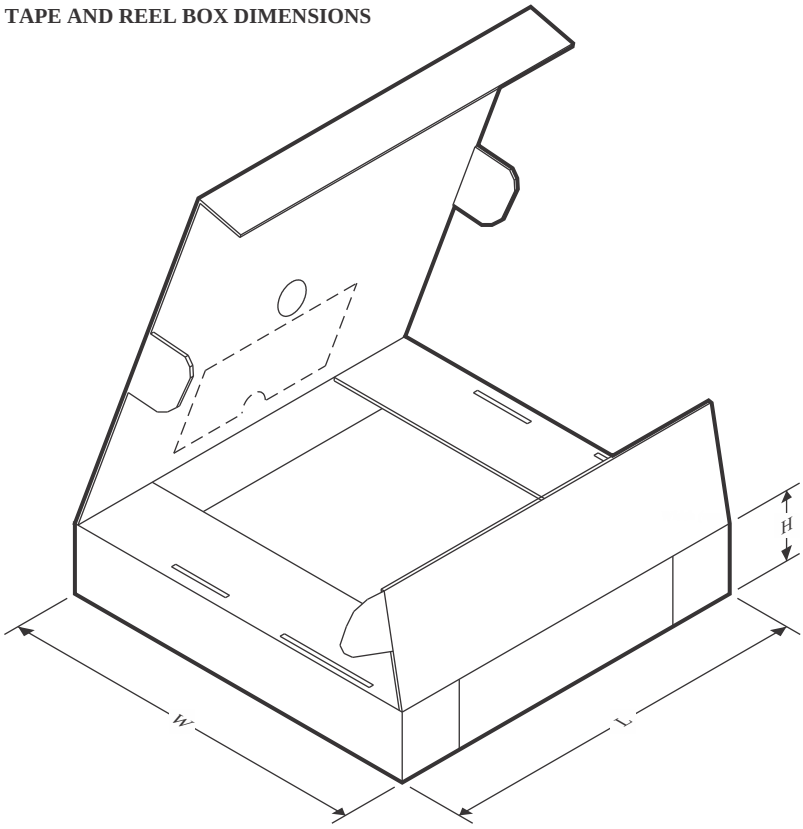

*All dimensions are nominal

Device	Package Type	Package Drawing	Pins	SPQ	Length (mm)	Width (mm)	Height (mm)
TPS62824DMQR	VSON-HR	DMQ	6	3000	341.0	182.0	80.0
TPS6282518DMQR	VSON-HR	DMQ	6	3000	210.0	185.0	35.0
TPS6282518DMQT	VSON-HR	DMQ	6	250	210.0	185.0	35.0
TPS6282533DMQR	VSON-HR	DMQ	6	3000	182.0	182.0	20.0
TPS62825DMQR	VSON-HR	DMQ	6	3000	210.0	185.0	35.0
TPS6282618DMQR	VSON-HR	DMQ	6	3000	182.0	182.0	20.0
TPS6282618DMQT	VSON-HR	DMQ	6	250	182.0	182.0	20.0
TPS62826ADMQR	VSON-HR	DMQ	6	3000	210.0	185.0	35.0
TPS62826DMQT	VSON-HR	DMQ	6	250	210.0	185.0	35.0
TPS62827DMQT	VSON-HR	DMQ	6	250	341.0	182.0	80.0