TAPE AND REEL INFORMATION

REEL DIMENSIONS

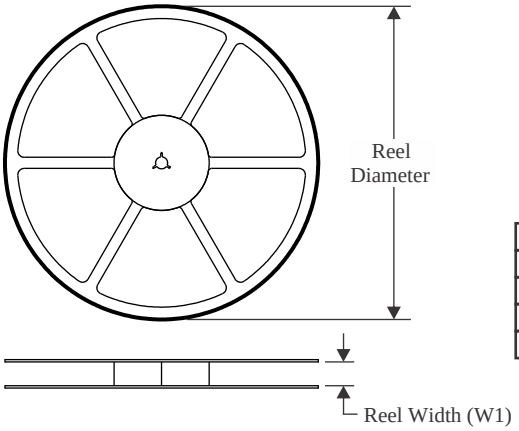

TAPE DIMENSIONS

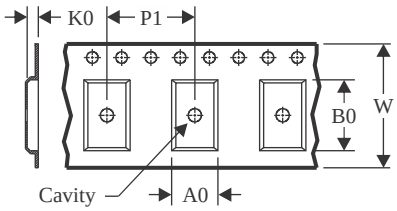

A0	Dimension designed to accommodate the component width
B0	Dimension designed to accommodate the component length
K0	Dimension designed to accommodate the component thickness
W	Overall width of the carrier tape
P1	Pitch between successive cavity centers

QUADRANT ASSIGNMENTS FOR PIN 1 ORIENTATION IN TAPE

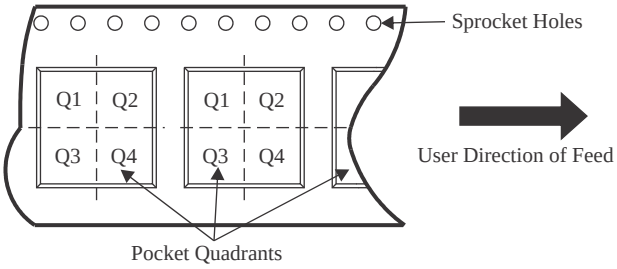

*All dimensions are nominal

Device	Package Type	Package Drawing	Pins	SPQ	Reel Diameter (mm)	Reel Width W1 (mm)	A0 (mm)	B0 (mm)	K0 (mm)	P1 (mm)	W (mm)	Pin1 Quadrant
TS5A23166DCUR	VSSOP	DCU	8	3000	178.0	9.5	2.25	3.35	1.05	4.0	8.0	Q3
TS5A23166DCUR	VSSOP	DCU	8	3000	180.0	8.4	2.25	3.35	1.05	4.0	8.0	Q3
TS5A23166DCURG4	VSSOP	DCU	8	3000	180.0	8.4	2.25	3.35	1.05	4.0	8.0	Q3
TS5A23166YZPR	DSBGA	YZP	8	3000	178.0	9.2	1.02	2.02	0.63	4.0	8.0	Q1
TS5A23166YZTR	DSBGA	YZT	8	3000	178.0	9.2	1.02	2.02	0.75	4.0	8.0	Q1

TAPE AND REEL BOX DIMENSIONS

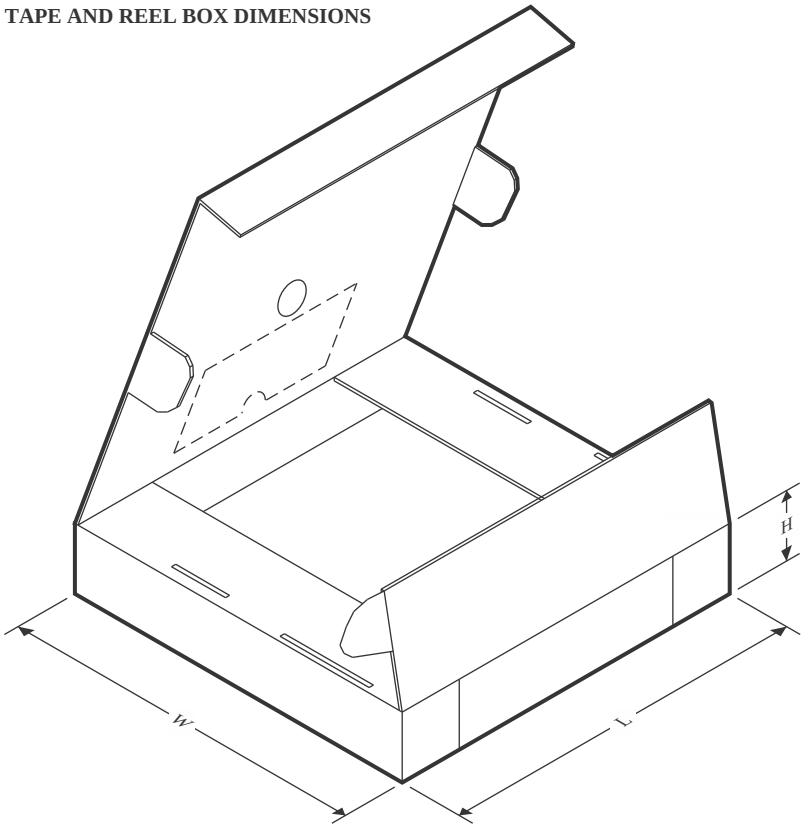

*All dimensions are nominal

Device	Package Type	Package Drawing	Pins	SPQ	Length (mm)	Width (mm)	Height (mm)
TS5A23166DCUR	VSSOP	DCU	8	3000	202.0	201.0	28.0
TS5A23166DCUR	VSSOP	DCU	8	3000	202.0	201.0	28.0
TS5A23166DCURG4	VSSOP	DCU	8	3000	202.0	201.0	28.0
TS5A23166YZPR	DSBGA	YZP	8	3000	220.0	220.0	35.0
TS5A23166YZTR	DSBGA	YZT	8	3000	220.0	220.0	35.0