TAPE AND REEL INFORMATION

REEL DIMENSIONS

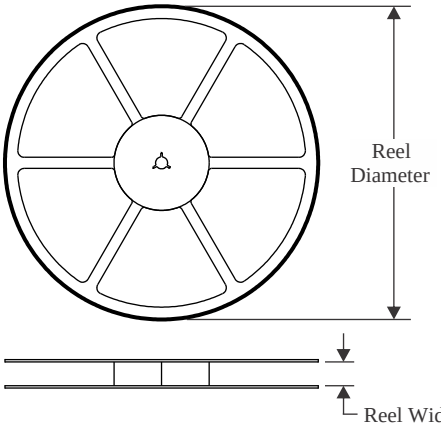

TAPE DIMENSIONS

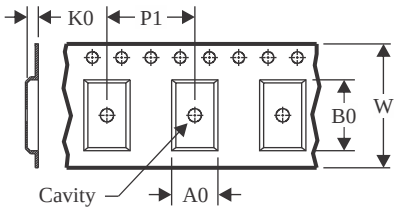

A0	Dimension designed to accommodate the component width
B0	Dimension designed to accommodate the component length
K0	Dimension designed to accommodate the component thickness
W	Overall width of the carrier tape
P1	Pitch between successive cavity centers

QUADRANT ASSIGNMENTS FOR PIN 1 ORIENTATION IN TAPE

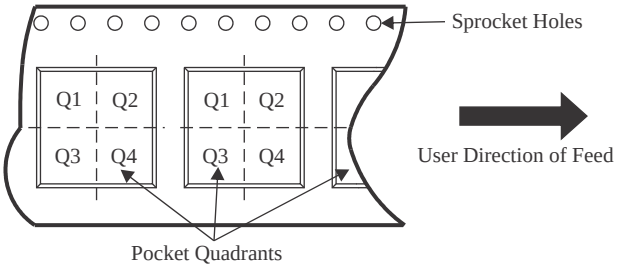

*All dimensions are nominal

Device	Package Type	Package Drawing	Pins	SPQ	Reel Diameter (mm)	Reel Width W1 (mm)	A0 (mm)	B0 (mm)	K0 (mm)	P1 (mm)	W (mm)	Pin1 Quadrant
UC2842AD8TR	SOIC	D	8	2500	330.0	12.4	6.4	5.2	2.1	8.0	12.0	Q1
UC2842ADTR	SOIC	D	14	2500	330.0	16.4	6.5	9.0	2.1	8.0	16.0	Q1
UC2842ADWTR	SOIC	DW	16	2000	330.0	16.4	10.75	10.7	2.7	12.0	16.0	Q1
UC2843AD8TR	SOIC	D	8	2500	330.0	12.4	6.4	5.2	2.1	8.0	12.0	Q1
UC2843ADTR	SOIC	D	14	2500	330.0	16.4	6.5	9.0	2.1	8.0	16.0	Q1
UC2844AD8TR	SOIC	D	8	2500	330.0	12.4	6.4	5.2	2.1	8.0	12.0	Q1
UC2844ADTR	SOIC	D	14	2500	330.0	16.4	6.5	9.0	2.1	8.0	16.0	Q1
UC2844AQD8R	SOIC	D	8	2500	330.0	12.4	6.4	5.2	2.1	8.0	12.0	Q1
UC2844AQDR	SOIC	D	14	2500	330.0	16.4	6.5	9.0	2.1	8.0	16.0	Q1
UC2845AD8TR	SOIC	D	8	2500	330.0	12.4	6.4	5.2	2.1	8.0	12.0	Q1
UC2845ADTR	SOIC	D	14	2500	330.0	16.4	6.5	9.0	2.1	8.0	16.0	Q1
UC3842AD8TR	SOIC	D	8	2500	330.0	12.4	6.4	5.2	2.1	8.0	12.0	Q1
UC3842ADTR	SOIC	D	14	2500	330.0	16.4	6.5	9.0	2.1	8.0	16.0	Q1
UC3843AD8TR	SOIC	D	8	2500	330.0	12.4	6.4	5.2	2.1	8.0	12.0	Q1
UC3843ADTR	SOIC	D	14	2500	330.0	16.4	6.5	9.0	2.1	8.0	16.0	Q1
UC3844AD8TR	SOIC	D	8	2500	330.0	12.4	6.4	5.2	2.1	8.0	12.0	Q1

Device	Package Type	Package Drawing	Pins	SPQ	Reel Diameter (mm)	Reel Width W1 (mm)	A0 (mm)	B0 (mm)	K0 (mm)	P1 (mm)	W (mm)	Pin1 Quadrant
UC3844ADTR	SOIC	D	14	2500	330.0	16.4	6.5	9.0	2.1	8.0	16.0	Q1
UC3845AD8TR	SOIC	D	8	2500	330.0	12.4	6.4	5.2	2.1	8.0	12.0	Q1
UC3845ADTR	SOIC	D	14	2500	330.0	16.4	6.5	9.0	2.1	8.0	16.0	Q1

TAPE AND REEL BOX DIMENSIONS

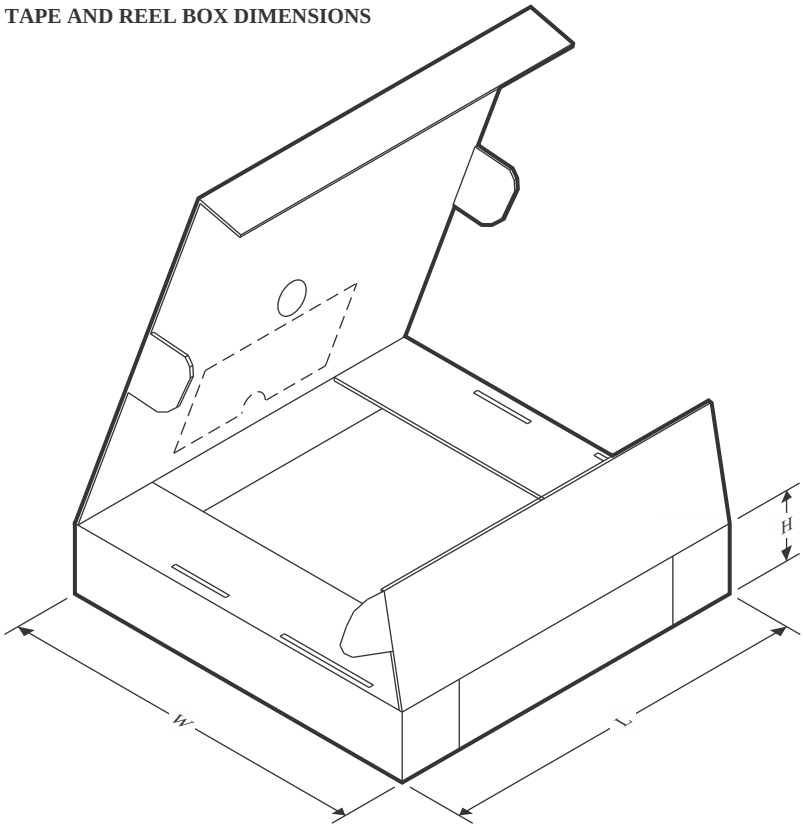

*All dimensions are nominal

Device	Package Type	Package Drawing	Pins	SPQ	Length (mm)	Width (mm)	Height (mm)
UC2842AD8TR	SOIC	D	8	2500	353.0	353.0	32.0
UC2842ADTR	SOIC	D	14	2500	353.0	353.0	32.0
UC2842ADWTR	SOIC	DW	16	2000	356.0	356.0	35.0
UC2843AD8TR	SOIC	D	8	2500	353.0	353.0	32.0
UC2843ADTR	SOIC	D	14	2500	353.0	353.0	32.0
UC2844AD8TR	SOIC	D	8	2500	353.0	353.0	32.0
UC2844ADTR	SOIC	D	14	2500	353.0	353.0	32.0
UC2844AQD8R	SOIC	D	8	2500	356.0	356.0	35.0
UC2844AQDR	SOIC	D	14	2500	356.0	356.0	35.0
UC2845AD8TR	SOIC	D	8	2500	353.0	353.0	32.0
UC2845ADTR	SOIC	D	14	2500	353.0	353.0	32.0
UC3842AD8TR	SOIC	D	8	2500	353.0	353.0	32.0
UC3842ADTR	SOIC	D	14	2500	340.5	336.1	32.0
UC3843AD8TR	SOIC	D	8	2500	353.0	353.0	32.0
UC3843ADTR	SOIC	D	14	2500	353.0	353.0	32.0
UC3844AD8TR	SOIC	D	8	2500	353.0	353.0	32.0
UC3844ADTR	SOIC	D	14	2500	333.2	345.9	28.6
UC3845AD8TR	SOIC	D	8	2500	353.0	353.0	32.0

Device	Package Type	Package Drawing	Pins	SPQ	Length (mm)	Width (mm)	Height (mm)
UC3845ADTR	SOIC	D	14	2500	353.0	353.0	32.0

TUBE

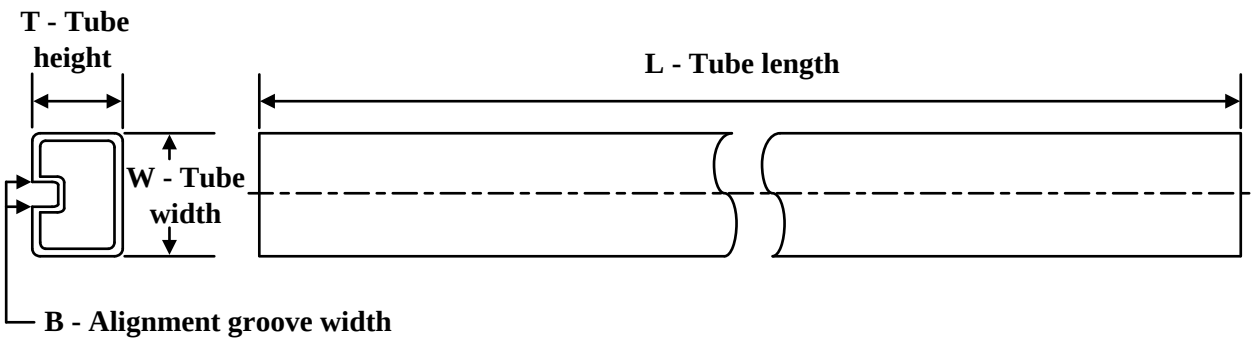

*All dimensions are nominal

Device	Package Name	Package Type	Pins	SPQ	L (mm)	W (mm)	T (µm)	B (mm)
5962-8670405XA	FK	LCCC	20	55	506.98	12.06	2030	NA
5962-8670406XA	FK	LCCC	20	55	506.98	12.06	2030	NA
5962-8670407XA	FK	LCCC	20	55	506.98	12.06	2030	NA
5962-8670408XA	FK	LCCC	20	55	506.98	12.06	2030	NA
UC1842AL883B	FK	LCCC	20	55	506.98	12.06	2030	NA
UC1843AL883B	FK	LCCC	20	55	506.98	12.06	2030	NA
UC1844AL883B	FK	LCCC	20	55	506.98	12.06	2030	NA
UC1845AL883B	FK	LCCC	20	55	506.98	12.06	2030	NA
UC2842AD	D	SOIC	14	50	507	8	3940	4.32
UC2842ADG4	D	SOIC	14	50	507	8	3940	4.32
UC2842ADW	DW	SOIC	16	40	507	12.83	5080	6.6
UC2842AN	P	PDIP	8	50	506	13.97	11230	4.32
UC2842AN	P	PDIP	8	50	506	13.97	11230	4.32
UC2842ANG4	P	PDIP	8	50	506	13.97	11230	4.32
UC2842ANG4	P	PDIP	8	50	506	13.97	11230	4.32
UC2843AD8	D	SOIC	8	75	507	8	3940	4.32
UC2843AD8G4	D	SOIC	8	75	507	8	3940	4.32
UC2843AN	P	PDIP	8	50	506	13.97	11230	4.32
UC2843AN	P	PDIP	8	50	506	13.97	11230	4.32
UC2843ANG4	P	PDIP	8	50	506	13.97	11230	4.32
UC2843ANG4	P	PDIP	8	50	506	13.97	11230	4.32
UC2844AN	P	PDIP	8	50	506	13.97	11230	4.32
UC2844AN	P	PDIP	8	50	506	13.97	11230	4.32
UC2844ANG4	P	PDIP	8	50	506	13.97	11230	4.32
UC2844ANG4	P	PDIP	8	50	506	13.97	11230	4.32
UC2845AD	D	SOIC	14	50	507	8	3940	4.32
UC2845ADW	DW	SOIC	16	40	507	12.83	5080	6.6
UC2845AN	P	PDIP	8	50	506	13.97	11230	4.32
UC2845AN	P	PDIP	8	50	506	13.97	11230	4.32

Device	Package Name	Package Type	Pins	SPQ	L (mm)	W (mm)	T (µm)	B (mm)
UC2845ANG4	P	PDIP	8	50	506	13.97	11230	4.32
UC2845ANG4	P	PDIP	8	50	506	13.97	11230	4.32
UC3842AD	D	SOIC	14	50	507	8	3940	4.32
UC3842ADG4	D	SOIC	14	50	507	8	3940	4.32
UC3842ADW	DW	SOIC	16	40	507	12.83	5080	6.6
UC3842AN	P	PDIP	8	50	506	13.97	11230	4.32
UC3842AN	P	PDIP	8	50	506	13.97	11230	4.32
UC3842ANG4	P	PDIP	8	50	506	13.97	11230	4.32
UC3842ANG4	P	PDIP	8	50	506	13.97	11230	4.32
UC3843AD	D	SOIC	14	50	507	8	3940	4.32
UC3843ADG4	D	SOIC	14	50	507	8	3940	4.32
UC3843AN	P	PDIP	8	50	506	13.97	11230	4.32
UC3843AN	P	PDIP	8	50	506	13.97	11230	4.32
UC3843ANG4	P	PDIP	8	50	506	13.97	11230	4.32
UC3843ANG4	P	PDIP	8	50	506	13.97	11230	4.32
UC3844AD	D	SOIC	14	50	507	8	3940	4.32
UC3844AD8	D	SOIC	8	75	507	8	3940	4.32
UC3844AD8G4	D	SOIC	8	75	507	8	3940	4.32
UC3844AN	P	PDIP	8	50	506	13.97	11230	4.32
UC3844AN	P	PDIP	8	50	506	13.97	11230	4.32
UC3844ANG4	P	PDIP	8	50	506	13.97	11230	4.32
UC3844ANG4	P	PDIP	8	50	506	13.97	11230	4.32
UC3845AD	D	SOIC	14	50	507	8	3940	4.32
UC3845ADG4	D	SOIC	14	50	507	8	3940	4.32
UC3845AN	P	PDIP	8	50	506	13.97	11230	4.32
UC3845AN	P	PDIP	8	50	506	13.97	11230	4.32
UC3845AN	P	PDIP	8	50	506	13.97	11230	4.32
UC3845ANG4	P	PDIP	8	50	506	13.97	11230	4.32
UC3845ANG4	P	PDIP	8	50	506	13.97	11230	4.32
UC3845ANG4	P	PDIP	8	50	506	13.97	11230	4.32