TAPE AND REEL INFORMATION

REEL DIMENSIONS

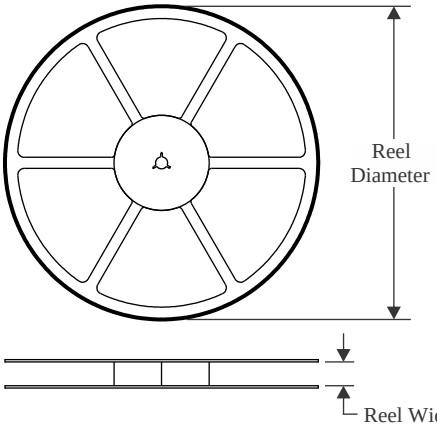

TAPE DIMENSIONS

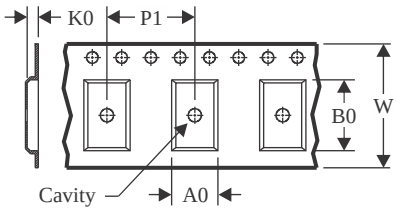

A0	Dimension designed to accommodate the component width
B0	Dimension designed to accommodate the component length
K0	Dimension designed to accommodate the component thickness
W	Overall width of the carrier tape
P1	Pitch between successive cavity centers

QUADRANT ASSIGNMENTS FOR PIN 1 ORIENTATION IN TAPE

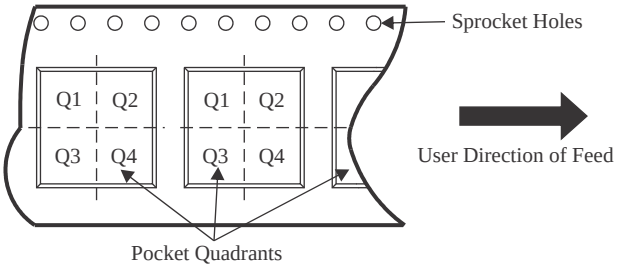

*All dimensions are nominal

Device	Package Type	Package Drawing	Pins	SPQ	Reel Diameter (mm)	Reel Width W1 (mm)	A0 (mm)	B0 (mm)	K0 (mm)	P1 (mm)	W (mm)	Pin1 Quadrant
UCC27323DGNR	HVSSOP	DGN	8	2500	330.0	12.4	5.3	3.4	1.4	8.0	12.0	Q1
UCC27323DGNR	HVSSOP	DGN	8	2500	330.0	12.4	5.3	3.4	1.4	8.0	12.0	Q1
UCC27323DR	SOIC	D	8	2500	330.0	12.4	6.4	5.2	2.1	8.0	12.0	Q1
UCC27323DR	SOIC	D	8	2500	330.0	12.4	6.4	5.2	2.1	8.0	12.0	Q1
UCC27324DGNR	HVSSOP	DGN	8	2500	330.0	12.4	5.3	3.4	1.4	8.0	12.0	Q1
UCC27324DGNR	HVSSOP	DGN	8	2500	330.0	12.4	5.3	3.4	1.4	8.0	12.0	Q1
UCC27324DR	SOIC	D	8	2500	330.0	12.4	6.4	5.2	2.1	8.0	12.0	Q1
UCC27324DR	SOIC	D	8	2500	330.0	12.4	6.4	5.2	2.1	8.0	12.0	Q1
UCC27324DR	SOIC	D	8	2500	330.0	12.4	6.4	5.2	2.1	8.0	12.0	Q1
UCC27325DGNR	HVSSOP	DGN	8	2500	330.0	12.4	5.3	3.4	1.4	8.0	12.0	Q1
UCC27325DGNR	HVSSOP	DGN	8	2500	330.0	12.4	5.3	3.4	1.4	8.0	12.0	Q1
UCC27325DR	SOIC	D	8	2500	330.0	12.4	6.4	5.2	2.1	8.0	12.0	Q1
UCC27325DR	SOIC	D	8	2500	330.0	12.4	6.4	5.2	2.1	8.0	12.0	Q1
UCC37323DGNR	HVSSOP	DGN	8	2500	330.0	12.4	5.3	3.4	1.4	8.0	12.0	Q1
UCC37323DGNR	HVSSOP	DGN	8	2500	330.0	12.4	5.3	3.4	1.4	8.0	12.0	Q1
UCC37323DR	SOIC	D	8	2500	330.0	12.4	6.4	5.2	2.1	8.0	12.0	Q1

Device	Package Type	Package Drawing	Pins	SPQ	Reel Diameter (mm)	Reel Width W1 (mm)	A0 (mm)	B0 (mm)	K0 (mm)	P1 (mm)	W (mm)	Pin1 Quadrant
UCC37323DR	SOIC	D	8	2500	330.0	12.4	6.4	5.2	2.1	8.0	12.0	Q1
UCC37324DGNR	HVSSOP	DGN	8	2500	330.0	12.4	5.3	3.4	1.4	8.0	12.0	Q1
UCC37324DGNR	HVSSOP	DGN	8	2500	330.0	12.4	5.3	3.4	1.4	8.0	12.0	Q1
UCC37324DR	SOIC	D	8	2500	330.0	12.4	6.4	5.2	2.1	8.0	12.0	Q1
UCC37324DR	SOIC	D	8	2500	330.0	12.4	6.4	5.2	2.1	8.0	12.0	Q1
UCC37325DGNR	HVSSOP	DGN	8	2500	330.0	12.4	5.3	3.4	1.4	8.0	12.0	Q1
UCC37325DGNR	HVSSOP	DGN	8	2500	330.0	12.4	5.3	3.4	1.4	8.0	12.0	Q1
UCC37325DR	SOIC	D	8	2500	330.0	12.4	6.4	5.2	2.1	8.0	12.0	Q1
UCC37325DR	SOIC	D	8	2500	330.0	12.4	6.4	5.2	2.1	8.0	12.0	Q1

TAPE AND REEL BOX DIMENSIONS

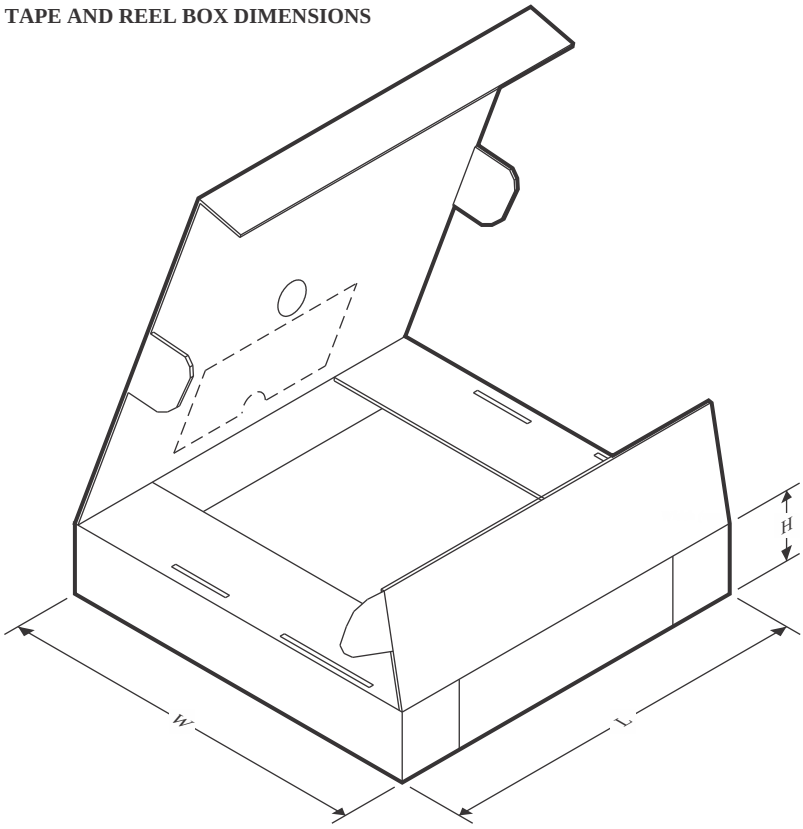

*All dimensions are nominal

Device	Package Type	Package Drawing	Pins	SPQ	Length (mm)	Width (mm)	Height (mm)
UCC27323DGNR	HVSSOP	DGN	8	2500	364.0	364.0	27.0
UCC27323DGNR	HVSSOP	DGN	8	2500	353.0	353.0	32.0
UCC27323DR	SOIC	D	8	2500	353.0	353.0	32.0
UCC27323DR	SOIC	D	8	2500	353.0	353.0	32.0
UCC27324DGNR	HVSSOP	DGN	8	2500	364.0	364.0	27.0
UCC27324DGNR	HVSSOP	DGN	8	2500	353.0	353.0	32.0
UCC27324DR	SOIC	D	8	2500	353.0	353.0	32.0
UCC27324DR	SOIC	D	8	2500	353.0	353.0	32.0
UCC27324DR	SOIC	D	8	2500	356.0	356.0	35.0
UCC27325DGNR	HVSSOP	DGN	8	2500	364.0	364.0	27.0
UCC27325DGNR	HVSSOP	DGN	8	2500	353.0	353.0	32.0
UCC27325DR	SOIC	D	8	2500	340.5	338.1	20.6
UCC27325DR	SOIC	D	8	2500	353.0	353.0	32.0
UCC37323DGNR	HVSSOP	DGN	8	2500	353.0	353.0	32.0
UCC37323DGNR	HVSSOP	DGN	8	2500	364.0	364.0	27.0
UCC37323DR	SOIC	D	8	2500	353.0	353.0	32.0
UCC37323DR	SOIC	D	8	2500	353.0	353.0	32.0
UCC37324DGNR	HVSSOP	DGN	8	2500	364.0	364.0	27.0

Device	Package Type	Package Drawing	Pins	SPQ	Length (mm)	Width (mm)	Height (mm)
UCC37324DGNR	HVSSOP	DGN	8	2500	353.0	353.0	32.0
UCC37324DR	SOIC	D	8	2500	353.0	353.0	32.0
UCC37324DR	SOIC	D	8	2500	353.0	353.0	32.0
UCC37325DGNR	HVSSOP	DGN	8	2500	353.0	353.0	32.0
UCC37325DGNR	HVSSOP	DGN	8	2500	364.0	364.0	27.0
UCC37325DR	SOIC	D	8	2500	353.0	353.0	32.0
UCC37325DR	SOIC	D	8	2500	340.5	338.1	20.6

TUBE

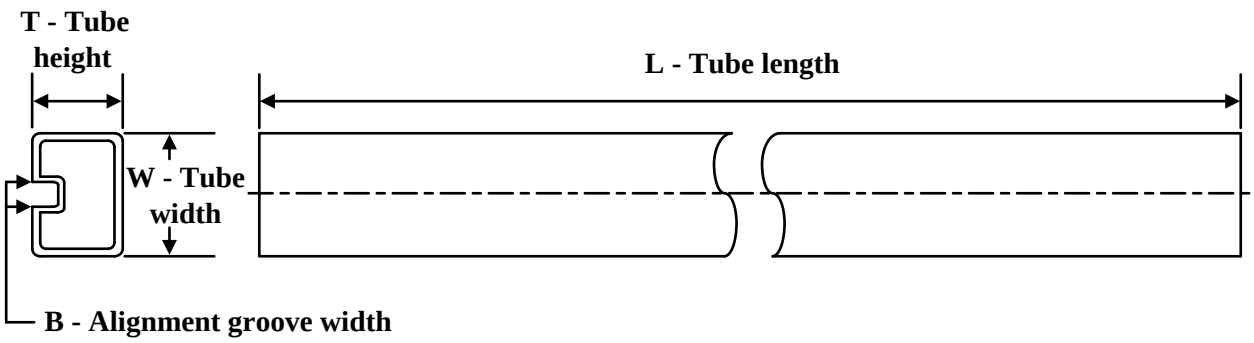

*All dimensions are nominal

Device	Package Name	Package Type	Pins	SPQ	L (mm)	W (mm)	T (µm)	B (mm)
UCC27323P	P	PDIP	8	50	506	13.97	11230	4.32
UCC27324P	P	PDIP	8	50	506	13.97	11230	4.32
UCC27324PE4	P	PDIP	8	50	506	13.97	11230	4.32
UCC27325P	P	PDIP	8	50	506	13.97	11230	4.32
UCC27325PE4	P	PDIP	8	50	506	13.97	11230	4.32
UCC37323P	P	PDIP	8	50	506	13.97	11230	4.32
UCC37324P	P	PDIP	8	50	506	13.97	11230	4.32
UCC37324PE4	P	PDIP	8	50	506	13.97	11230	4.32
UCC37325P	P	PDIP	8	50	506	13.97	11230	4.32