TAPE AND REEL INFORMATION

REEL DIMENSIONS

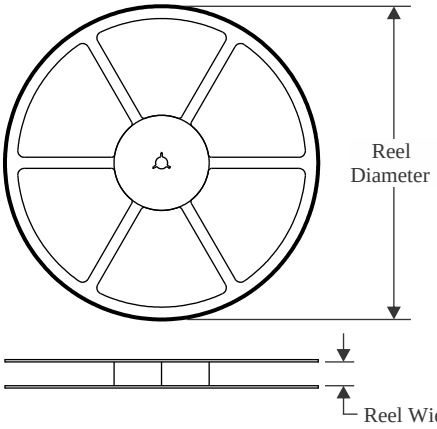

TAPE DIMENSIONS

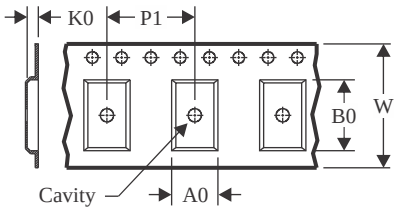

A0	Dimension designed to accommodate the component width
B0	Dimension designed to accommodate the component length
K0	Dimension designed to accommodate the component thickness
W	Overall width of the carrier tape
P1	Pitch between successive cavity centers

QUADRANT ASSIGNMENTS FOR PIN 1 ORIENTATION IN TAPE

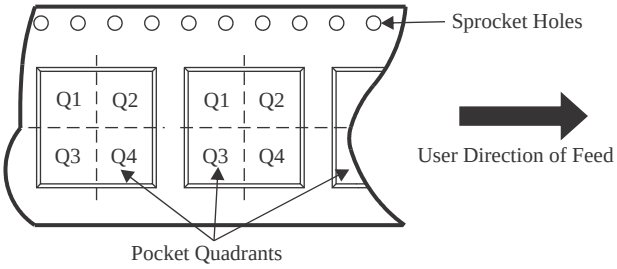

*All dimensions are nominal

Device	Package Type	Package Drawing	Pins	SPQ	Reel Diameter (mm)	Reel Width W1 (mm)	A0 (mm)	B0 (mm)	K0 (mm)	P1 (mm)	W (mm)	Pin1 Quadrant
ULN2003ADR	SOIC	D	16	2500	330.0	16.4	6.5	10.3	2.1	8.0	16.0	Q1
ULN2003ADR	SOIC	D	16	2500	330.0	16.4	6.5	10.3	2.1	8.0	16.0	Q1
ULN2003ADR	SOIC	D	16	2500	330.0	16.4	6.5	10.3	2.1	8.0	16.0	Q1
ULN2003ADR	SOIC	D	16	2500	330.0	16.4	6.5	10.3	2.1	8.0	16.0	Q1
ULN2003ADYYR	SOT-23-THIN	DYY	16	3000	330.0	12.4	4.8	3.6	1.6	8.0	12.0	Q3
ULN2003AIDR	SOIC	D	16	2500	330.0	16.4	6.5	10.3	2.1	8.0	16.0	Q1
ULN2003AIDR	SOIC	D	16	2500	330.0	16.4	6.5	10.3	2.1	8.0	16.0	Q1
ULN2003AIDR	SOIC	D	16	2500	330.0	16.4	6.5	10.3	2.1	8.0	16.0	Q1
ULN2003AINSR	SO	NS	16	2000	330.0	16.4	8.2	10.5	2.5	12.0	16.0	Q1
ULN2003AINSR	SO	NS	16	2000	330.0	16.4	8.45	10.55	2.5	12.0	16.2	Q1
ULN2003AIPWR	TSSOP	PW	16	2000	330.0	12.4	6.9	5.6	1.6	8.0	12.0	Q1
ULN2003AIPWR	TSSOP	PW	16	2000	330.0	12.4	6.9	5.6	1.6	8.0	12.0	Q1
ULN2003ANSR	SO	NS	16	2000	330.0	16.4	8.45	10.55	2.5	12.0	16.2	Q1
ULN2003ANSR	SO	NS	16	2000	330.0	16.4	8.2	10.5	2.5	12.0	16.0	Q1
ULN2003APWR	TSSOP	PW	16	2000	330.0	12.4	6.9	5.6	1.6	8.0	12.0	Q1

Device	Package Type	Package Drawing	Pins	SPQ	Reel Diameter (mm)	Reel Width W1 (mm)	A0 (mm)	B0 (mm)	K0 (mm)	P1 (mm)	W (mm)	Pin1 Quadrant
ULN2003APWR	TSSOP	PW	16	2000	330.0	12.4	6.9	5.6	1.6	8.0	12.0	Q1
ULN2004ADR	SOIC	D	16	2500	330.0	16.4	6.5	10.3	2.1	8.0	16.0	Q1
ULN2004ADR	SOIC	D	16	2500	330.0	16.4	6.5	10.3	2.1	8.0	16.0	Q1
ULN2004ANSR	SO	NS	16	2000	330.0	16.4	8.2	10.5	2.5	12.0	16.0	Q1

TAPE AND REEL BOX DIMENSIONS

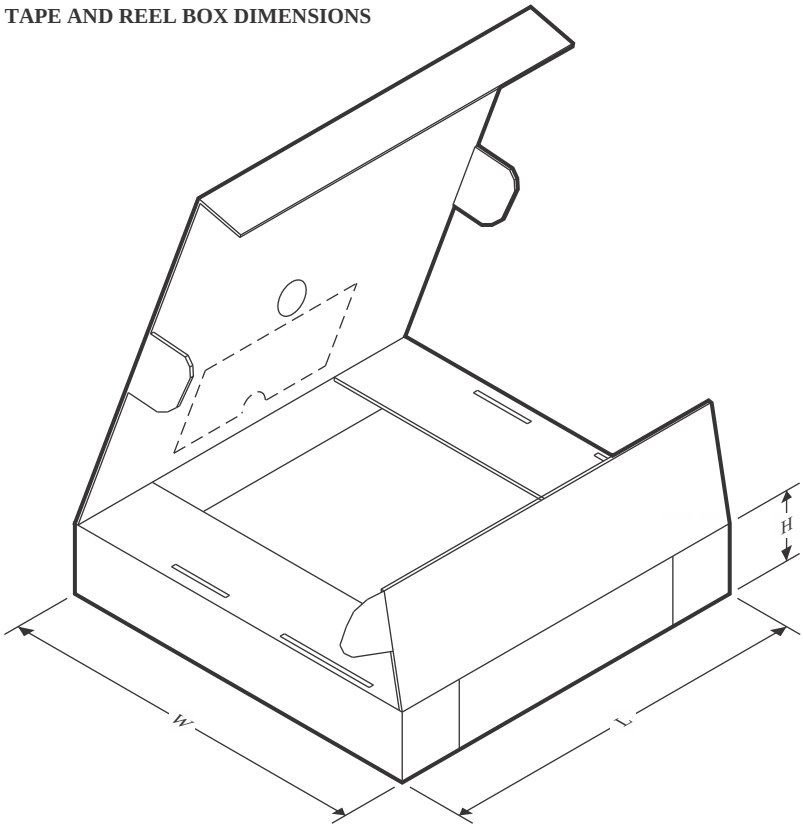

*All dimensions are nominal

Device	Package Type	Package Drawing	Pins	SPQ	Length (mm)	Width (mm)	Height (mm)
ULN2003ADR	SOIC	D	16	2500	356.0	356.0	35.0
ULN2003ADR	SOIC	D	16	2500	340.5	336.1	32.0
ULN2003ADR	SOIC	D	16	2500	353.0	353.0	32.0
ULN2003ADR	SOIC	D	16	2500	353.0	353.0	32.0
ULN2003ADYYR	SOT-23-THIN	DYY	16	3000	336.6	336.6	31.8
ULN2003AIDR	SOIC	D	16	2500	353.0	353.0	32.0
ULN2003AIDR	SOIC	D	16	2500	353.0	353.0	32.0
ULN2003AIDR	SOIC	D	16	2500	340.5	336.1	32.0
ULN2003AINSR	SO	NS	16	2000	356.0	356.0	35.0
ULN2003AINSR	SO	NS	16	2000	353.0	353.0	32.0
ULN2003AIPWR	TSSOP	PW	16	2000	356.0	356.0	35.0
ULN2003AIPWR	TSSOP	PW	16	2000	353.0	353.0	32.0
ULN2003ANSR	SO	NS	16	2000	353.0	353.0	32.0
ULN2003ANSR	SO	NS	16	2000	356.0	356.0	35.0
ULN2003APWR	TSSOP	PW	16	2000	356.0	356.0	35.0
ULN2003APWR	TSSOP	PW	16	2000	353.0	353.0	32.0
ULN2004ADR	SOIC	D	16	2500	340.5	336.1	32.0
ULN2004ADR	SOIC	D	16	2500	353.0	353.0	32.0

Device	Package Type	Package Drawing	Pins	SPQ	Length (mm)	Width (mm)	Height (mm)
ULN2004ANSR	SO	NS	16	2000	356.0	356.0	35.0

TUBE

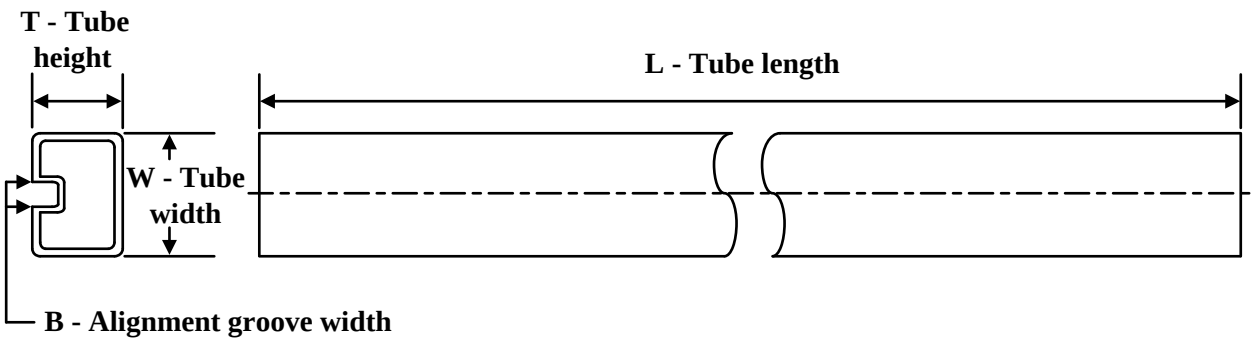

*All dimensions are nominal

Device	Package Name	Package Type	Pins	SPQ	L (mm)	W (mm)	T (µm)	B (mm)
ULN2002AN	N	PDIP	16	25	506	13.97	11230	4.32
ULN2002ANE4	N	PDIP	16	25	506	13.97	11230	4.32
ULN2003AN	N	PDIP	16	25	506	13.97	11230	4.32
ULN2003AN	N	PDIP	16	25	506	13.97	11230	4.32
ULN2003AN	N	PDIP	16	25	506.1	9	600	5.4
ULN2004AN	N	PDIP	16	25	506	13.97	11230	4.32
ULN2004AN	N	PDIP	16	25	506	13.97	11230	4.32
ULN2004ANE4	N	PDIP	16	25	506	13.97	11230	4.32
ULN2004ANE4	N	PDIP	16	25	506	13.97	11230	4.32
ULQ2003AN	N	PDIP	16	25	506	13.97	11230	4.32
ULQ2003AN	N	PDIP	16	25	506	13.97	11230	4.32
ULQ2004AD	D	SOIC	16	40	507	8	3940	4.32
ULQ2004ADG4	D	SOIC	16	40	507	8	3940	4.32
ULQ2004AN	N	PDIP	16	25	506	13.97	11230	4.32