© COPYRIGHT 2025 TEXAS INSTRUMENTS
UN-PUBLISHED, ALL RIGHTS RESERVED.

REVISIONS

REV	DESCRIPTION	DATE	BY
A	ECO 2212373: INITIAL RELEASE	3/25/2025	JER

NOTES UNLESS OTHERWISE SPECIFIED:

1. DIE PARALLELISM TOLERANCE APPLIES TO DMD ACTIVE ARRAY ONLY.
2. ROTATION ANGLE OF DMD ACTIVE ARRAY IS A REFINEMENT OF THE LOCATION TOLERANCE AND HAS A MAXIMUM ALLOWED VALUE OF 0.6 DEGREES.
3. BOUNDARY MIRRORS SURROUNDING THE DMD ACTIVE ARRAY.
4. NOTCH DIMENSIONS ARE DEFINED BY SECOND LAYER OF CERAMIC, AS SHOWN IN SECTION A-A.
5. ENCAPSULANT TO BE CONTAINED WITHIN DIMENSIONS SHOWN IN VIEW D (SHEET 3). NO ENCAPSULANT IS ALLOWED ON TOP OF THE WINDOW.
6. ENCAPSULANT NOT TO EXCEED THE HEIGHT OF THE WINDOW.
7. SEE DETAIL B FOR "V-NOTCH" DIMENSIONS.
8. WHILE ONLY THE THREE DATUM A TARGET AREAS A1, A2, AND A3 ARE USED FOR MEASUREMENT, ALL 4 CORNERS SHOULD BE CONTACTED, INCLUDING E1, TO SUPPORT MECHANICAL LOADS.
9. SHORTING TEST PADS AND SYMBOLIZATION PAD TO EACH OTHER AND/OR TO VSS IS ACCEPTABLE.

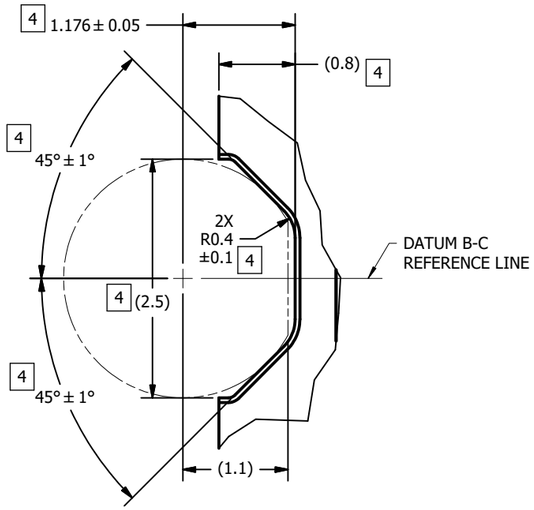

DETAIL B
V-NOTCH
SCALE 32 : 1

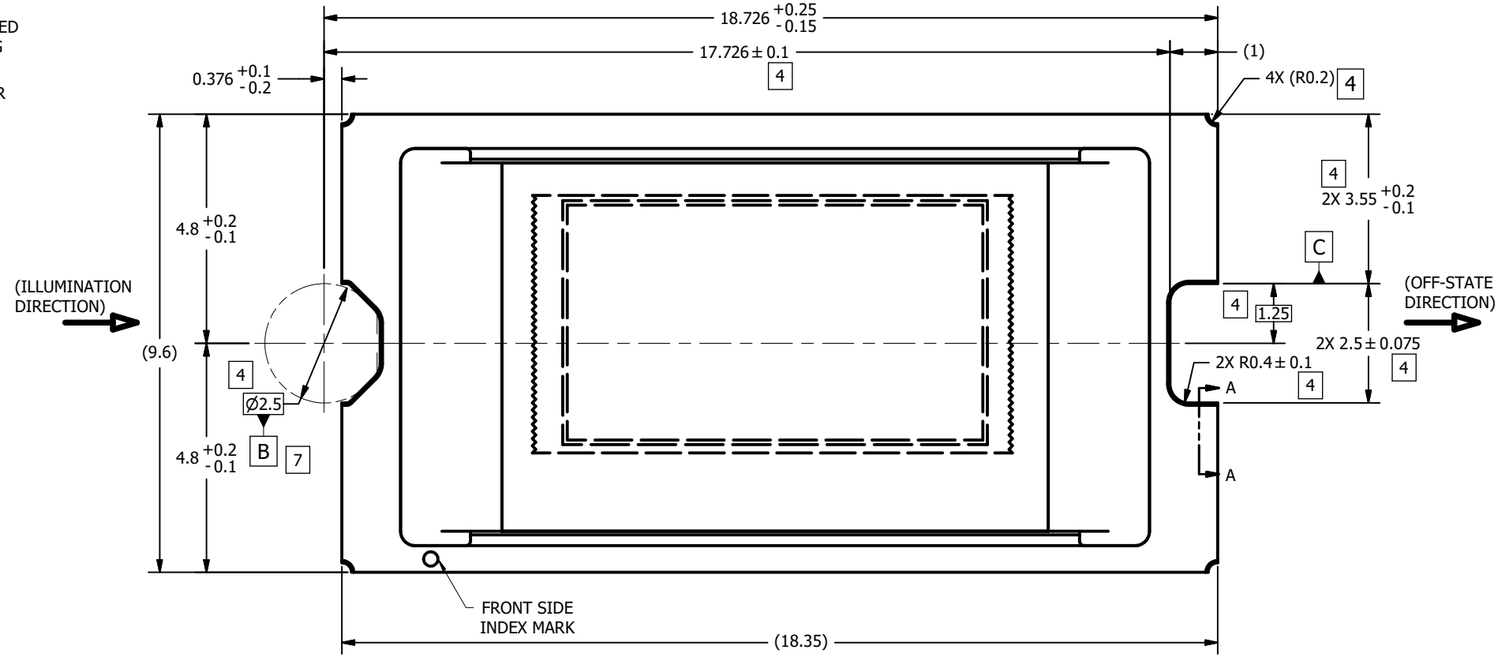

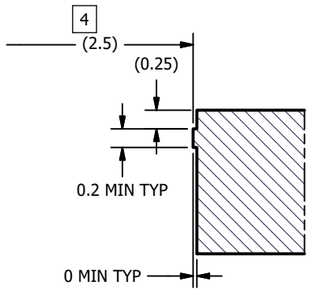

SECTION A-A
NOTCH OFFSETS
SCALE 25 : 1
(ROTATED 90°)

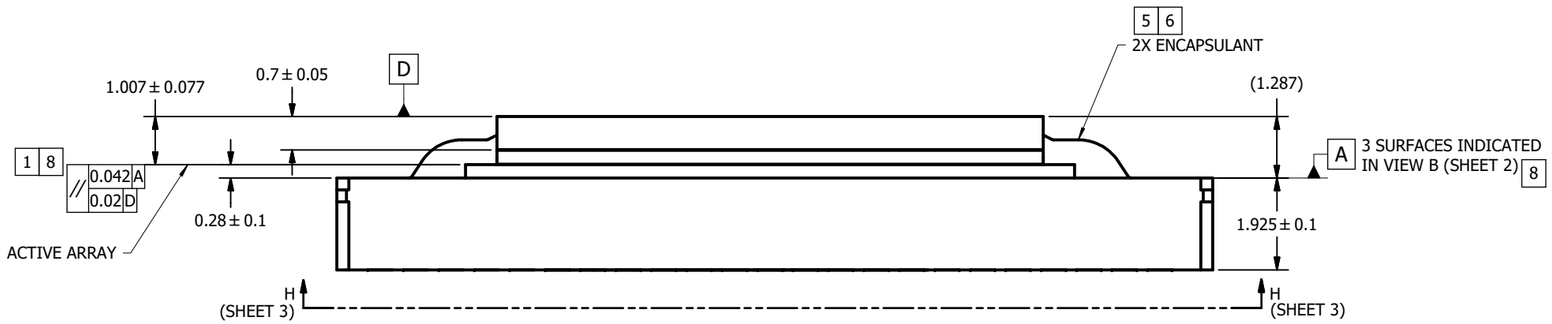

	0314DA
NEXT ASSY	USED ON
APPLICATION	

THIRD ANGLE PROJECTION

UNLESS OTHERWISE SPECIFIED
- DIMENSIONS ARE IN MILLIMETERS
- TOLERANCES:
  - ANGLES ± 1°
  - 2 PLACE DECIMALS ± 0.25
  - 1 PLACE DECIMALS ± 0.50
- ~~DIMENSIONAL LIMITS APPLY BEFORE PROCESSES~~
- INTERPRET DIMENSIONS IN ACCORDANCE WITH ASME Y14.5M-1994
- ~~REMOVE ALL BURRS AND SHARP EDGES~~
- PARENTHETICAL INFORMATION FOR REFERENCE ONLY

		DATE
DRAWN	J. RANGEL	3/5/2025
ENGINEER	J. RANGEL	3/21/2025
QA/CE	P. KONRAD	3/24/2025
CM	J. McKINLEY	3/24/2025
APPROVED	P. BOWLING	3/25/2025

TEXAS INSTRUMENTS
Dallas Texas

TITLE: ICD, MECHANICAL, DMD, .39 AUTO SERIES 323 (FSC PACKAGE)

SIZE	DWG NO	REV
D	2519364	A

SCALE 16:1 SHEET 1 OF 5

INV11-2006a

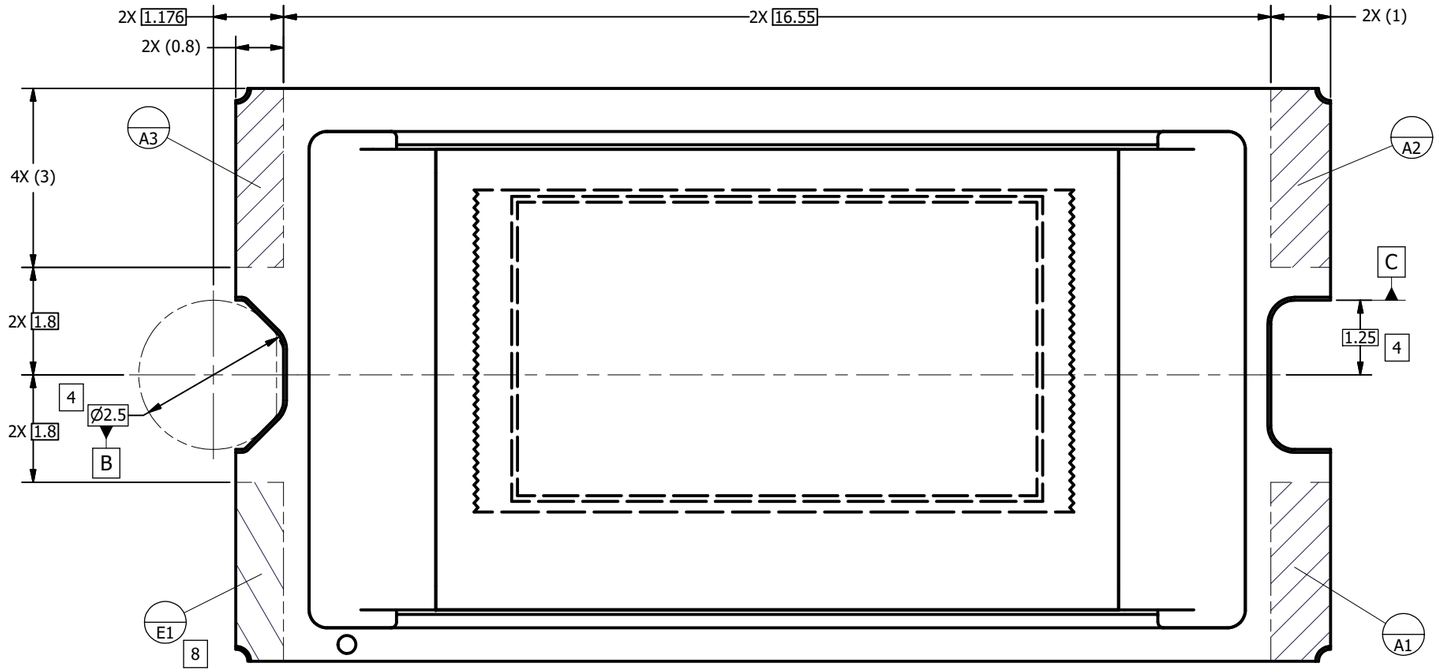

VIEW C
DATUMS A AND E
SCALE 20 : 1
(FROM SHEET 1)

TEXAS INSTRUMENTS Dallas Texas	DRAWN J. RANGEL	DATE 3/5/2025	SIZE D	DWG NO 2519364	REV A
			SCALE	SHEET 2 OF 5	

INV11-2006a

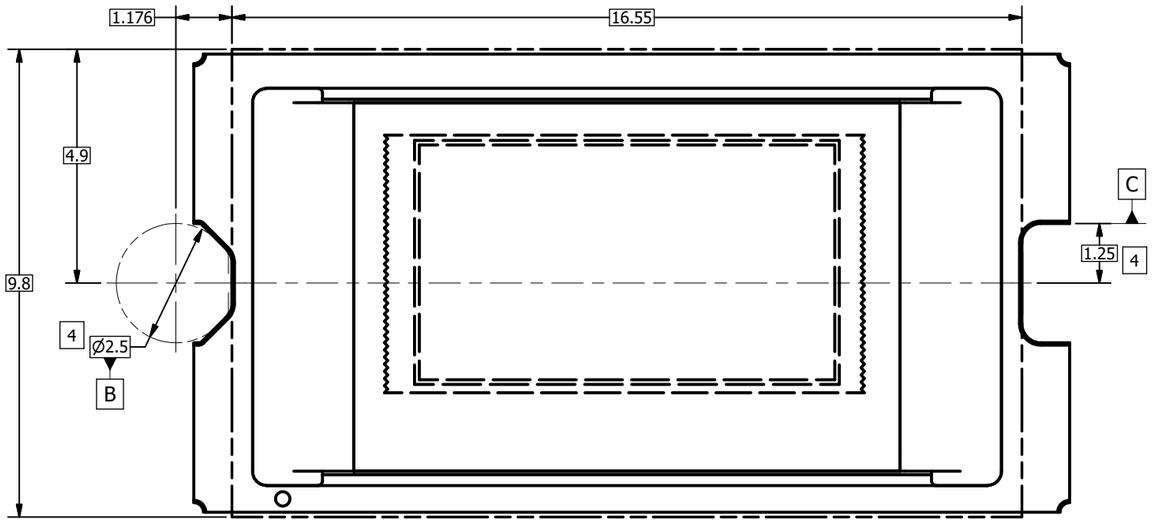

VIEW D
ENCAPSULANT MAXIMUM X/Y DIMENSIONS [5]
(FROM SHEET 1)

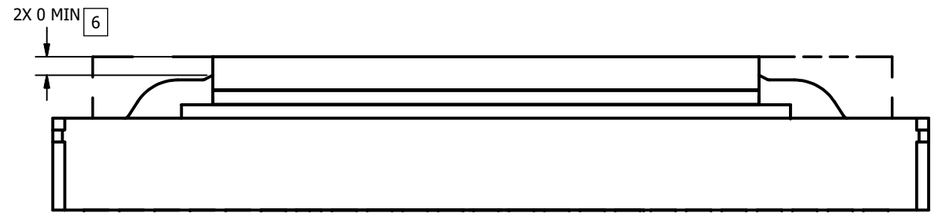

VIEW E
ENCAPSULANT MAXIMUM HEIGHT

TEXAS INSTRUMENTS Dallas Texas	DRAWN J. RANGEL	DATE 3/5/2025	SIZE D	DWG NO 2519364 / REV A
			SCALE	SHEET 3 OF 5

INV11-2006a

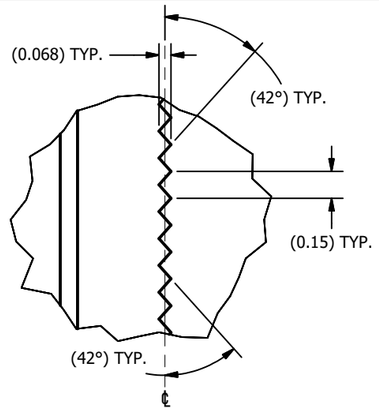

DETAIL G
APERTURE LEFT AND RIGHT EDGES
(GLASS OMITTED FOR CLARITY)
SCALE 60 : 1

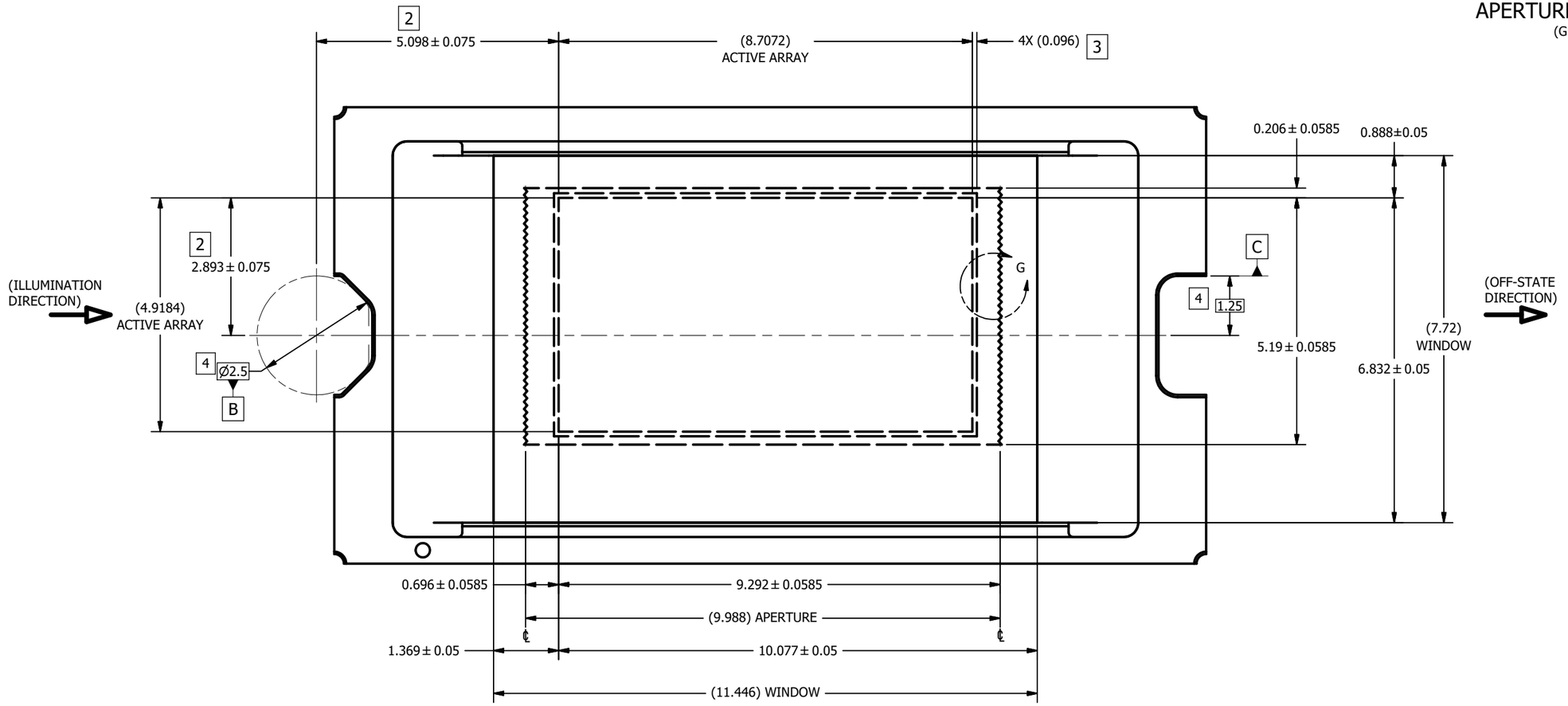

VIEW F
WINDOW AND ACTIVE ARRAY
SCALE 20 : 1
(FROM SHEET 1)

TEXAS INSTRUMENTS Dallas Texas	DRAWN J. RANGEL	DATE 3/5/2025	SIZE D	DWG NO 2519364	REV A
			SCALE	SHEET 4 OF 5	

INV11-2006a

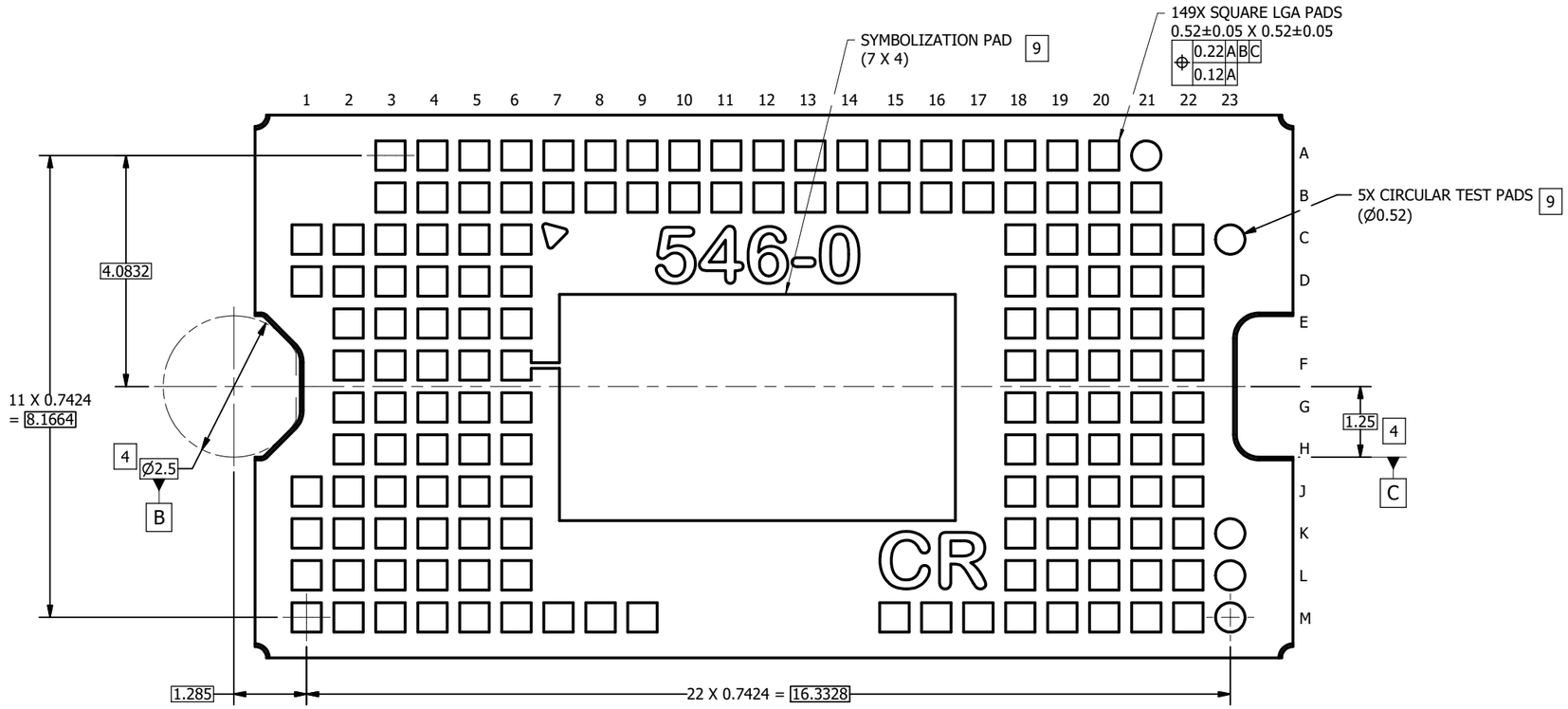

VIEW H-H
BACK SIDE METALLIZATION
SCALE 20 : 1

TEXAS INSTRUMENTS Dallas Texas	DRAWN J. RANGEL	DATE 3/5/2025	SIZE D		DWG NO 2519364	REV A
			SCALE		SHEET 5 OF 5	

IMPORTANT NOTICE AND DISCLAIMER

TI PROVIDES TECHNICAL AND RELIABILITY DATA (INCLUDING DATA SHEETS), DESIGN RESOURCES (INCLUDING REFERENCE DESIGNS), APPLICATION OR OTHER DESIGN ADVICE, WEB TOOLS, SAFETY INFORMATION, AND OTHER RESOURCES “AS IS” AND WITH ALL FAULTS, AND DISCLAIMS ALL WARRANTIES, EXPRESS AND IMPLIED, INCLUDING WITHOUT LIMITATION ANY IMPLIED WARRANTIES OF MERCHANTABILITY, FITNESS FOR A PARTICULAR PURPOSE OR NON-INFRINGEMENT OF THIRD PARTY INTELLECTUAL PROPERTY RIGHTS.

These resources are intended for skilled developers designing with TI products. You are solely responsible for (1) selecting the appropriate TI products for your application, (2) designing, validating and testing your application, and (3) ensuring your application meets applicable standards, and any other safety, security, regulatory or other requirements.

These resources are subject to change without notice. TI grants you permission to use these resources only for development of an application that uses the TI products described in the resource. Other reproduction and display of these resources is prohibited. No license is granted to any other TI intellectual property right or to any third party intellectual property right. TI disclaims responsibility for, and you will fully indemnify TI and its representatives against, any claims, damages, costs, losses, and liabilities arising out of your use of these resources.

TI’s products are provided subject to TI’s Terms of Sale or other applicable terms available either on ti.com or provided in conjunction with such TI products. TI’s provision of these resources does not expand or otherwise alter TI’s applicable warranties or warranty disclaimers for TI products.

TI objects to and rejects any additional or different terms you may have proposed.

Mailing Address: Texas Instruments, Post Office Box 655303, Dallas, Texas 75265
Copyright © 2025, Texas Instruments Incorporated